JVC

SERVICE MANUAL

VIDEO CASSETTE RECORDER

BR-S610E

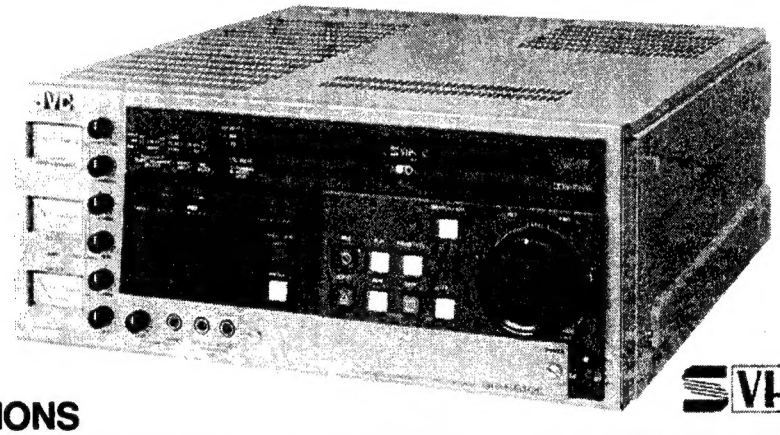

S-VHS 625 VHS PAL Hi-Fi

SPECIFICATIONS

GENERAL

Format	: VHS PAL/S-VHS Europe standard
Power requirement	: AC 110/127/220/240 V~, 50/60 Hz
Power consumption	: 105 watts (Max. 115 watts with the Automatic Editing Control Unit, DC 12 V, 550 mA)
Dimensions	: 42.9(W) x 18.8(H) x 51.4(D) cm (16-3/4" x 7-1/2" x 6-3/4")
Weight	: 23 kg (51 lbs)
Operating temperature	: 5° C to 40° C (41° F to 104° F)
Storage temperature	: –20° C to 50° C (–4° F to 122° F)
Tape speed	: 23.39 mm/sec
Recording & Playback time	: Max. 180 min. with JVC E-180/ SE-180
Fast forward/Rewind time	: Less than 4.5 min. for 180 min. tape
Search speed	: Dial Search FWD/REW X ±1/30 to X ± 10

VIDEO

Recording and playback	: Rotary four-head, helical scanning system Colour signal: Phase shift, converted sub-carrier direct recording
Video signal system	: PAL-type colour signal S-VHS Europe type Y/C signal
Input	
Line	: 0.5 to 2.0 Vp-p, 75 ohms, unbalanced
YC627	Y: 1.0 Vp-p, 1 k-ohms, unbalanced C: 0.9 Vp-p, 1 k-ohms, unbalanced
YC443	Y: 1.0 Vp-p, 75 ohms, unbalanced C: 0.3 Vp-p, 75 ohms, unbalanced
Output	
Line	: 1.0 Vp-p, 75 ohms, unbalanced
YC627	Y: 1.0 vp-p, 1 k-ohms, unbalanced C: 0.9 Vp-p, 1 k-ohms, unbalanced
YC443	Y: 1.0 Vp-p, 75 ohms, unbalanced C: 0.3 Vp-p, 75 ohms, unbalanced
Signal-to-noise ratio	: More than 45 dB
Horizontal resolution	: More than 400 lines (S-VHS) More than 250 lines (VHS colour) More then 300 lines (VHS B/W)
External SYNC input	: 0.5 to 4.0 Vp-p, 75 ohms, unbalanced
RF output (DOC)	: 0.5 Vp-p, 75 ohms, unbalanced

AUDIO

Input	
Line	: –6 dBs, 10 k-ohms, unbalanced (Hi-Fi/Normal)
Mic	: –67 dBs, 10 k-ohms, unbalanced
Output	
Line	: –6 dBs, Low impedance, unbalanced (Hi-Fi/Normal)
Headphone	: –40 to –20 dB, 8 to 300 ohms
Monitor	: –6 dBs Low impedance, unbalanced
Signal-to-noise ratio	: More than 43 dB (NR-off) (Normal)
Dynamic range	: More than 87 dB (Hi-Fi)
Frequency response	: 20 to 20,000 Hz (Hi-Fi) 40 to 12,000 Hz (Normal)
Wow and flutter	: Less than 0.005% WRMS (Hi-Fi) Less than 0.25% rms (Normal)
Time code	
Input	: 0 dB ± 6 dBs, 10 k-ohms
Output	: 0 dB ± 3 dBs, Low impedance

CONNECTORS

Video	
Line input	: BNC-type connector
Line output	: BNC-type connectors
YC443/YC627 input/ output	: 7-pin connectors
Audio	
Hi-Fi input/output	: RCA-type pin connectors
Normal input/output	: RCA-type pin connectors
Micophones	: 6 mm jacks
Headphones	: 6 mm jack
Remote control	: 45-pin connector
Accessories	: 7-pin cable

C This material is controlled under "Cabinet order concerning control of foreign exchange" in Japan as one of the strategic technology. In the case of exporting this material from Japan, it is requested that you take necessary procedures to obtain prior approval from the Japanese government.

COPYRIGHT © 1989 VICTOR COMPANY OF JAPAN, LTD.

No. 9176
January 1989

TABLE OF CONTENTS

Section	Title	Page
Important Safety Precautions		
INSTRUCTIONS		
1.	**GENERAL DESCRIPTION**	
1.1	REMOVING EXTERNAL COVERS	1-1
1.2	REMOVING MAIN BOARDS	1-2
1.3	DIP SWITCHES	1-5
1.4	TBC SWITCH	1-9
1.5	DUB TERMINAL (7-PIN) OF BR-S610E	1-10
1.6	WARNINGS OF BR-S610E	1-11
1.7	SETTING OF SWITCHES AT SERVICING	1-14
2.	**MECHANICAL ADJUSTMENT**	
2.1	FORWARD	2-1
2.2	REQUIRED JIGS AND EQUIPMENT	2-1
2.3	LOCATION OF MAIN PARTS	2-2
2.4	SERVICING SCHEDULE FOR MAIN COMPONENTS	2-4
2.5	MAIN PARTS REPLACEMENT	2-5
2.5.1	Cassette housing removal	2-5
2.5.2	Upper drum	2-6
2.5.3	Lower drum	2-7
2.5.4	Upper drum eccentricity	2-7
2.5.5	Capstan motor	2-8
2.5.6	Supply reel motor	2-9
2.5.7	Take-up reel motor	2-9
2.5.8	Loading drive gear assembly and loading motor	2-10
2.5.9	Audio control (A/C) head assembly	2-10
2.6	GENERAL ADJUSTMENTS	2-11
2.6.1	Master plane fixture (PUJ42146)	2-11
2.6.2	Reel disk height	2-11
2.6.3	Supply guide pole height	2-11
2.6.4	Take-up (TU) guide roller height	2-11
2.6.5	Take-up guide roller parallel	2-12
2.6.6	Pinch roller	2-12
2.6.7	Differential transformer positioning	2-12
2.6.8	Pinch roller solenoid	2-12
2.6.9	Tension pole perpendicularity	2-13
2.6.10	A/C head parallel	2-13
2.6.11	Take-up guide pole height	2-13
2.6.12	Take-up guide pole perpendicularity	2-13
2.6.13	Reel servo circuit	2-14
2.7	TAPE TRANSPORT SYSTEM ADJUSTMENT	2-18
2.7.1	Tape transport system checks	2-18
2.7.2	Tape transport system adjustments	2-19
2.8	INTERCHANGEABILITY	2-20
2.8.1	FM waveform checks	2-20
2.8.2	FM waveform coarse adjustment	2-20
2.8.3	FM waveform fine adjustment	2-21
2.8.4	A/C head height	2-21
2.8.5	A/C head azimuth	2-22
2.8.6	A/C head position	2-22
2.8.7	Final checks	2-22
2.8.8	Relative height	2-22
2.8.9	Adjustment of half-loading pole position	2-25
2.8.10	Adjustment of A/C head shield setting position	2-25
2.8.11	Adjustment of adjuster setting position	2-25

Section	Title	Page
3.	**ELECTRICAL ADJUSTMENTS**	
3.1	PRECAUTIONS	3-1
3.1.1	Required test equipment	3-1
3.1.2	Explanation about columns	3-2
3.1.3	Video signal generator of Y/C443/Y/C627 signal	3-3
3.1.4	Alignment tape specifications	3-4
3.1.5	Convenient fixtures	3-5
3.2	POWER SUPPLY SYSTEM & SYSCON ADJUSTMENT	3-6
3.2.1	Regulator output voltage check	3-6
3.2.2	Syscon board	3-6
3.3	SERVO SYSTEM ADJUSTMENT	3-7
3.4	AUDIO SYSTEM ADJUSTMENT	3-11
3.5	VIDEO SYSTEM ADJUSTMENT	3-18
4.	**DIAGRAM AND CIRCUIT BOARDS**	
4.1	KEY TO ABBREVIATIONS	4-2
4.2	REPLACING SUBMINATURE "CHIP" PARTS	4-4
4.3	CIRCUIT BOARD LOCATIONS	4-6
4.4	REC Y BLOCK DIAGRAM	4-8
4.5	Y/C SEPARATOR BLOCK DIAGRAM	4-9
4.6	REC COLOR BLOCK DIAGRAM	4-10
4.7	PB Y BLOCK DIAGRAM	4-11
4.8	RF 2H DELAY BLOCK DIAGRAM	4-12
4.9	Y 2H DELAY BLOCK DIAGRAM	4-13
4.10	PB COLOR BLOCK DIAGRAM	4-14
4.11	CROSSTALK CANCEL BLOCK DIAGRAM	4-15
4.12	FM REC/PB BLOCK DIAGRAM	4-16
4.13	VIDEO PRE/REC AMP BLOCK DIAGRAM	4-17
4.14	FM AUDIO BLOCK DIAGRAM	4-18
4.15	NORMAL AUDIO BLOCK DIAGRAM	4-19
4.16	COLOR FRAME SERVO BLOCK DIAGRAM	4-20
4.17	SERVO 1 BLOCK DIAGRAM	4-21
4.18	SERVO 2 BLOCK DIAGRAM	4-22
4.19	SYSCON BLOCK DIAGRAM	4-23
4.20	REC Y SCHEMATIC DIAGRAM	4-24
4.21	REC Y CIRCUIT BOARD	4-25
4.22	Y/C SEPARATOR SCHEMATIC DIAGRAM	4-26
4.23	Y/C SEPARATOR CIRCUIT BOARD	4-27
4.24	REC COLOR SCHEMATIC DIAGRAM	4-28
4.25	REC COLOR CIRCUIT BOARD	4-29
4.26	PB Y SCHEMATIC DIAGRAM	4-30
4.27	PB Y CIRCUIT BOARD	4-31
4.28	Y 2H DELAY SCHEMATIC DIAGRAM	4-32
4.29	Y 2H DELAY CIRCUIT BOARD	4-33
4.30	PB COLOR SCHEMATIC DIAGRAM	4-34
4.31	PB COLOR CIRCUIT BOARD	4-35
4.32	CROSSTALK CANCEL SCHEMATIC DIAGRAM	4-36
4.33	CROSSTALK CANCEL CIRCUIT BOARD	4-37
4.34	FM REC/PB SCHEMATIC DIAGRAM	4-38
4.35	FM REC/PB CIRCUIT BOARD	4-39
4.36	VIDEO PRE/REC AMP SCHEMATIC DIAGRAM	4-40
4.37	VIDEO PRE/REC AMP CIRCUIT BOARD	4-41
4.38	(RF) 2H DELAY SCHEMATIC DIAGRAM	4-42
4.39	(RF) 2H DELAY CIRCUIT BOARD	4-43
4.40	FM AUDIO SCHEMATIC DIAGRAM 1/2	4-44

Section	Title	Page
4.41	FM AUDIO CIRCUIT BOARD	4-45
4.42	NORMAL AUDIO SCHEMATIC DIAGRAM	4-46
4.43	NORMAL AUDIO CIRCUIT BOARD	4-47
4.44	VIDEO ERASE FM AUDIO PREAMP SCHEMATIC DIAGRAM	4-48
4.45	V. ERASE & FMA PREAMP CIRCUIT BOARD	4-48
4.46	FM AUDIO SCHEMATIC DIAGRAM	4-49
4.47	2H DELAY SCHEMATIC DIAGRAM	4-49
4.48	SERVO 1 (DRUM & CAPSTAN SERVO) SCHEMATIC DIAGRAMS	4-50
4.49	SERVO 1 (DRUM & CAPSTAN SERVO) CIRCUIT BOARD	4-51
4.50	SERVO 1 SUB SCHEMATIC DIAGRAM	4-52
4.51	SERVO 1 SUB CIRCUIT BOARD	4-53
4.52	SERVO 2 SCHEMATIC DIAGRAM	4-54
4.53	SERVO 2 CIRCUIT BOARD	4-55
4.54	COLOR FRAME SERVO SCHEMATIC DIAGRAM	4-56
4.55	COLOR FRAME SERVO CIRCUIT BOARD	4-57
4.56	SYSCON SCHEMATIC DIAGRAM	4-58
4.57	SYSCON CIRCUIT BOARD	4-60
4.58	DRIVER SCHEMATIC DIAGRAM	4-62
4.59	DRIVER CIRCUIT BOARD	4-66
4.60	REGULATOR SCHEMATIC DIAGRAM	4-66
4.61	REGULATOR CIRCUIT BOARDS	4-67
4.62	OPERATION 1 SCHEMATIC DIAGRAM	4-68
4.63	OPERATION 1 CIRCUIT BOARD	4-69
4.64	JOG BOARD	4-69
4.65	OPERATION 2 SCHEMATIC DIAGRAM	4-70
4.66	OPERATION 2 CIRCUIT BOARDS	4-71
4.67	SELECT SWITCH BOARD	4-72
4.68	FRONT LED BOARD	4-73
4.69	45 PIN CONNECTOR SCHEMATIC DIAGRAM	4-74
4.70	45 PIN CONNECTOR CIRCUIT BOARD	4-75
4.71	REAR SCHEMATIC DIAGRAM	4-76
4.72	REAR CIRCUIT BOARD	4-79
4.73	JACK SCHEMATIC DIAGRAM	4-80
4.74	JACK CIRCUIT BOARDS	4-81
4.75	MOTHER SCHEMATIC DIAGRAM	4-82
4.76	MOTHER CIRCUIT BOARD	4-83
4.77	OVERALL WIRING DIAGRAM	4-84
4.78	CASSETTE HOUSING, TERMINAL AND etc. CIRCUIT BOARDS	4-86
4.79	IC BLOCK DIAGRAMS	4-87

5. EXPLODED VIEWS AND PARTS LIST

5.1	STANDARD PART NUMBER CODING	5 - 2
5.1.1	Screw coding	5 - 2
5.1.2	Fuse coding	5 - 2
5.2	EXPLODED VIEWS AND PARTS LIST	5 - 3
5.2.1	Packing assembly	5 - 3
5.2.2	Cabinet assembly	5 - 4
5.2.3	Chassis assembly	5 - 6
5.2.4	Frame assembly	5 - 8
5.2.5	Mounting bracket assembly	5-10
5.2.6	Rear bracket assembly	5-13
5.2.7	Main-deck (1) assembly	5-14
5.2.8	Main-deck (2) assembly	5-16
5.2.9	Sub-deck assembly	5-18
5.2.10	Drum assembly	5-20
5.2.11	Cassette housing assembly	5-20
5.2.12	Front panel assembly	5-22

6. ELECTRICAL PARTS LIST

6.1	STANDARD PART NUMBER CODING	6 - 2
6.1.1	Fixed resistor coding	6 - 2
6.1.2	Fixed capacitor coding	6 - 3
6.1.3	Fuse coding	6 - 5
	REC Y BOARD ASSEMBLY <01>	6 - 6
	PB Y BOARD ASSEMBLY <02>	6 - 9
	PB COLOR BOARD ASSEMBLY <03>	6-13
	Y/C SEPARATOR BOARD ASSEMBLY <04>	6-16
	VIDEO PRE/REC AMP BOARD ASSEMBLY <05>	6-19
	FULL ERASE HEAD BOARD <06>	6-21
	FM AUDIO BOARD ASSEMBLY <07>	6-21
	NORMAL AUDIO BOARD ASSEMBLY <08>	6-25
	V ERASE/FMA PRE BOARD ASSEMBLY <09>	6-29
	SERVO-1 BOARD ASSEMBLY <10>	6-30
	SERVO-2 BOARD ASSEMBLY <11>	6-35
	SYSCON BOARD ASSEMBLY <12>	6-38
	END SENSOR BOARD <13>	6-40
	DRIVER BOARD ASSEMBLY <14>	6-40
	LED BOARD <15>	6-42
	MOTHER BOARD ASSEMBLY <16>	6-42
	REGULATOR BOARD ASSEMBLY <17>	6-43
	CASSETTE HOUSING BOARD <18>	6-44
	OPERATION-1 BOARD ASSEMBLY <19>	6-44
	OPERATION-2 BOARD ASSEMBLY <20>	6-44
	TERMINAL BOARD <21>	6-45
	SELECT SWITCH BOARD ASSEMBLY <22>	6-45
	VR BOARD ASSEMBLY <23>	6-46
	JOG BOARD ASSEMBLY <24>	6-46
	DIRECTION LED BOARD ASSEMBLY <26>	6-46
	LOADING/UNLOADING SWITCH BOARD <27>	6-46
	45PIN CONNECTOR BOARD ASSEMBLY <28>	6-46
	REAR BOARD ASSEMBLY <29>	6-47
	FRONT LED BOARD ASSEMBLY <30>	6-50
	COUNTER BOARD ASSEMBLY <31>	6-50
	A/C HEAD BOARD <35>	6-50
	COLOR FRAM SERVO BOARD ASSEMBLY <36>	6-50
	(RF) 2H DELAY BOARD ASSEMBLY <37>	6-51
	PICK OUT DETECTOR BOARD <38>	6-52
	CONNECTOR BOARD ASSEMBLY <39>	6-52
	SERVO-1 SUB BOARD ASSEMBLY <40>	6-52
	POWER TRANSISTOR BOARD ASSEMBLY <41>	6-53
	HEADPHONE VR BOARD ASSEMBLY <51>	6-53
	HEADPHONE JACK BOARD ASSEMBLY <52>	6-54
	L CHANNEL MIC JACK BOARD ASSEMBLY <53>	6-54
	R CHANNEL MIC JACK BOARD ASSEMBLY <54>	6-54
	JACK BOARD ASSEMBLY <55>	6-54
	CROSS TALK CANCEL BOARD ASSEMBLY <63>	6-54
	Y 2H DELAY BOARD ASSEMBLY <65>	6-57
	REC COLOR BOARD ASSEMBLY <66>	6-61
	FM REC & PB BOARD ASSEMBLY <67>	6-65

Important Safety Precautions

Prior to shipment from the factory, JVC products are strictly inspected to conform with the recognized product safety and electrical codes of the countries in which they are to be sold. However, in order to maintain such compliance, it is equally important to implement the following precautions when a set is being serviced.

● Precautions during Servicing

1. Locations requiring special caution are denoted by labels and inscriptions on the cabinet, chassis and certain parts of the product. When performing service, be sure to read and comply with these and other cautionary notices appearing in the operation and service manuals.

2. Parts identified by the ⚠ symbol and shaded (▒) parts are critical for safety.
   Replace only with specified part numbers.
   Note: Parts in this category also include those specified to comply with X-ray emission standards for products using cathode ray tubes and those specified for compliance with various regulations regarding spurious radiation emission.

3. Fuse replacement caution notice.
   Caution for continued protection against fire hazard.
   Replace only with same type and rated fuse(s) as specified.

4. Use specified internal wiring. Note especially:
   1) Wires covered with PVC tubing
   2) Double insulated wires
   3) High voltage leads

5. Use specified insulating materials for hazardous live parts. Note especially:
   1) Insulation Tape
   2) PVC tubing
   3) Spacers
   4) Insulation sheets for transistors
   5) Barrier

6. When replacing AC primary side components (transformers, power cords, noise blocking capacitors, etc.) wrap ends of wires securely about the terminals before soldering.

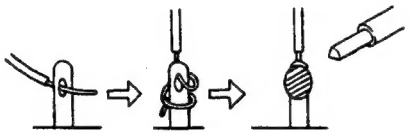

Fig. 1

7. Observe that wires do not contact heat producing parts (heat-sinks, oxide metal film resistors, fusible resistors, etc.)

8. Check that replaced wires do not contact sharp edged or pointed parts.

9. When a power cord has been replaced, check that 10—15 kg of force in any direction will not loosen it.

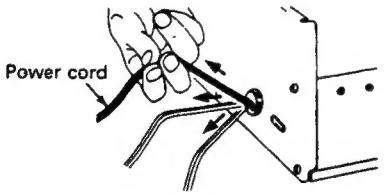

Fig. 2

10. Also check areas surrounding repaired locations.

11. Products using cathode ray tubes (CRTs)
    In regard to such products, the cathode ray tubes themselves, the high voltage circuits, and related circuits are specified for compliance with recognized codes pertaining to X-ray emission. Consequently, when servicing these products, replace the cathode ray tubes and other parts with only the specified parts. Under no circumstances attempt to modify these circuits. Unauthorized modification can increase the high voltage value and cause X-ray emission from the cathode ray tube.

12. Crimp type wire connector
    In such cases as when replacing the power transformer in sets where the connections between the power cord and power transformer primary lead wires are performed using crimp type connectors, if replacing the connectors is unavoidable, in order to prevent safety hazards, perform carefully and precisely according to the following steps.

    1) **Connector part number** : E03830-001
    2) **Required tool** : Connector crimping tool of the proper type which will not damage insulated parts.
    3) **Replacement procedure**
       (1) Remove the old connector by cutting the wires at a point close to the connector.
       Important : Do not reuse a connector (discard it).

Fig. 3

(2) Strip about 15 mm of the insulation from the ends of the wires. If the wires are stranded, twist the strands to avoid frayed conductors.

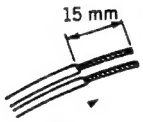

Fig. 4

(3) Align the lengths of the wires to be connected. Insert the wires fully into the connector.

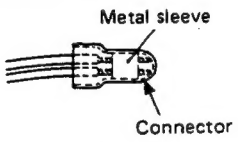

Fig. 5

(4) As shown in Fig. 6, use the crimping tool to crimp the metal sleeve at the center position. Be sure to crimp fully to the complete closure of the tool.

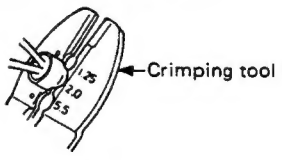

Fig. 6

(5) Check the four points noted in Fig. 7.

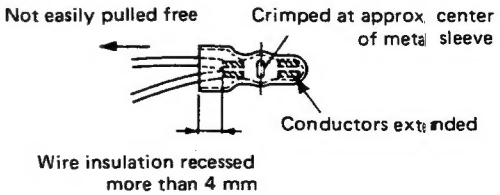

Fig. 7

● Safety Check after Servicing

Examine the area surrounding the repaired location for damage or deterioration. Observe that screws, parts and wires have been returned to original positions, Afterwards, perform the following tests and confirm the specified values in order to verify compliance with safety standards.

1. Insulation resistance test

Confirm the specified insulation resistance or greater between power cord plug prongs and externally exposed parts of the set (RF terminals, antenna terminals, video and audio input and output terminals, microphone jacks, earphone jacks, etc.). See table 1 below.

2. Dielectric strength test

Confirm specified dielectric strength or greater between power cord plug prongs and exposed accessible parts of the set (RF terminals, antenna terminals, video and audio input and output terminals, microphone jacks, earphone jacks, etc.). See table 1 below.

3. Clearance distance

When replacing primary circuit components, confirm specified clearance distance (d), (d') between soldered terminals, and between terminals and surrounding metallic parts. See table 1 below.

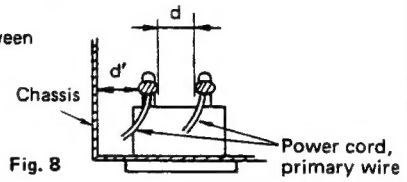

Fig. 8

4. Leakage current test

Confirm specified or lower leakage current between earth ground/power cord plug prongs and externally exposed accessible parts (RF terminals, antenna terminals, video and audio input and output terminals, microphone jacks, earphone jacks, etc.).

Measuring Method: (Power ON)

Insert load Z between earth ground/power cord plug prongs and externally exposed accessible parts. Use an AC voltmeter to measure across both terminals of load Z. See figure 9 and following table 2.

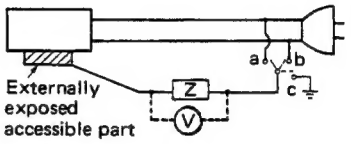

Fig. 9

5. Grounding (Class I model only)

Confirm specified or lower grounding impedance between earth pin in AC inlet and externally exposed accessible parts (Video in, Video out, Audio in, Audio out or Fixing screw etc.).

Measuring Method:

Connect milli ohm meter between earth pin in AC inlet and exposed accessible parts. See figure 10 and grounding specifications.

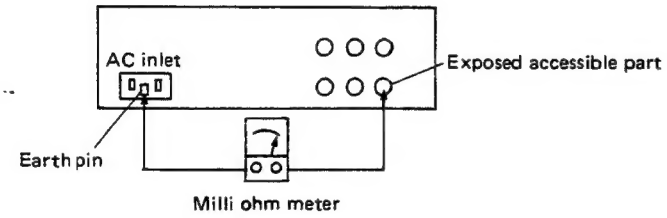

Fig. 10

Grounding Specifications

Region	Grounding Impedance (Z)
USA & Canada	Z ≦ 0.1 ohm
Europe & Australia	Z ≦ 0.5 ohm

AC Line Voltage	Region	Insulation Resistance (R)	Dielectric Strength	Clearance Distance (d), (d')
100 V	Japan	R ≧ 1 MΩ/500 V DC	AC 1 kV 1 minute	d, d' ≧ 3 mm
100 to 240 V			AC 1.5 kV 1 minute	d, d' ≧ 4 mm
110 to 130 V	USA & Canada	–	AC 900 V 1 minute	d, d' ≧ 3.2 mm
110 to 130 V 200 to 240 V	Europe & Australia	R ≧ 10 MΩ /500 V DC	AC 3 kV 1 minute (Class II) AC 1.5 kV 1 minute (Class I)	d ≧ 4 mm d' ≧ 8 mm (Power cord) d' ≧ 6 mm (Primary wire)

Table 1 Specifications for each region

AC Line Voltage	Region	Load Z	Leakage Current (i)	a, b, c
100 V	Japan	1 kΩ	i ≦ 1 mA rms	Exposed accessible parts
110 to 130 V	USA & Canada	0.15 μF, 1.5 kΩ	i ≦ 0.5 mA rms	Exposed accessible parts
110 to 130 V 220 to 240 V	Europe & Australia	2 kΩ	i ≦ 0.7 mA peak i ≦ 2 mA dc	Antenna earth terminals
		50 kΩ	i ≦ 0.7 mA peak i ≦ 2 mA dc	Other terminals

Table 2 Leakage current specifications for each region

Note: These tables are unofficial and for reference only. Be sure to confirm the precise values for your particular country and locality.

INSTRUCTIONS

JVC

BR-S610E

S-VHS VIDEO CASSETTE RECORDER

S-VHS 625 VHS PAL Hi-Fi

D30002-133

Warning Notice
FOR YOUR SAFETY (Australia)

1. Insert this plug only into effectively earthed three-pin power outlet.
2. If any doubt exists regarding the earthing, consult a qualified electrician.
3. Extension cord, if used, must be three-core correctly wired.

IMPORTANT (In the United Kingdom)
Mains Supply (AC 240 V~)
WARNING – THIS APPARATUS MUST BE EARTHED

The wires in this mains lead are coloured in accordance with the following code;

GREEN-and-YELLOW:	EARTH
BLUE:	NEUTRAL
BROWN:	LIVE

As the colours of the wires in the mains lead of this apparatus may not correspond with the coloured markings identifying the terminals in your plug, proceed as follows. The wire which is coloured GREEN-AND-YELLOW must be connected to the terminal in the plug which is marked with the letter E or by the safety earth symbol ⏚ or coloured GREEN or GREEN-AND-YELLOW. The wire which is coloured BLUE must be connected to the terminal which is marked with the letter N or which is coloured BLACK. The wire which is coloured BROWN must be connected to the terminal which is marked with the letter L or coloured RED.

POWER SYSTEM

Connection to the mains supply
The operating voltage of this set is preset to 240 V~ at the factory.
Before connecting to mains, check that the voltage selector on the rear panel is set to the same voltage as your local mains supply.
Adapting to local power line
This set operates on either 110, 127, 220 or 240 V~.
If the preset voltage is different from the power line voltage in your area, reset the voltage selector by inserting a screwdriver into the slot of the voltage selector and turning it until the correct voltage is displayed.

This equipment has been produced to comply with Directive number 82/499/EEC.

WARNING:

TO PREVENT FIRE OR SHOCK HAZARD, DO NOT EXPOSE THIS APPLIANCE TO RAIN OR MOISTURE.

CAUTION

To prevent electric shock, do not open the cabinet. No user serviceable parts inside. Refer servicing to qualified service personnel.

Note: The rating plate and the safety caution are on the rear of the unit.

CONTENTS

Precautions 2
Features 3
Controls and Connectors 4
Connections
Video Equipment Connection 9
Audio Equipment Connection 9
Connection For Tape-To-Tape Editing 10
Loading and Unloading a Video Cassette 11
Playback 12
Dial Search & Shuttle Search 13
Repeat Playback, Counter Search & Auto Rewind 13
Recording 14
Reference Sync Signals 15
Timer Recording & Playback 16
Tape End Warning 16
Audio Dubbing 17
Warning Display 18
Test Points 19
Specifications 20

PRECAUTIONS

Handling and storage

- Avoid using the recorder under the following conditions:
  – extremely hot, cold or humid places,
  – dusty places,
  – near appliances generating strong magnetic fields,
  – places subject to vibrations, and
  – poorly ventilated places.
- Be careful of moisture condensation.
  Avoid using the recorder immediately after moving it from a cold place to a warm place or soon after heating a room which was cold. The water vapor in warm air will condense on the still-cold video head drum and tape guides and may cause damage to the tape and the recorder.
- Handle the recorder carefully.
  - Do not block the ventilation openings.
  - Do not place anything heavy on the recorder.
  - Do not place anything which might spill and cause trouble on the top cover of the recorder.
  - Use in horizontal (flat) position only.
- In case of transportation,
  - Avoid violent shocks to the recorder during packing and transportation.
  - Before packing, be sure to remove the cassette from the recorder.

Video cassettes

- This recorder employs S-VHS and VHS cassettes only.
  S-VHS: SE-180 for 180 minutes, SE-120 for 120 minutes, and SE-60 for 60 minutes of recording.
  VHS: E-240 for 240 minutes, E-180 for 180 minutes, E-120 for 120 minutes, E-90 for 90 minutes, E-60 for 60 minutes and E-30 for 30 minutes of recording.
- Video cassettes are equipped with a safety tab to prevent accidental erasure. When the tab is removed, recording cannot be performed. If you wish to record on a cassette whose tab has already been removed, use adhesive tape to block the hole.

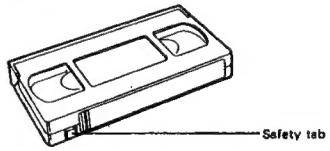

- Avoid exposing the cassettes to direct sunlight. Keep them away from heaters.
- Avoid extreme humidity, violent vibrations or shocks, strong magnetic fields (near a motor, transformer or magnet) and dusty places.
- Place the cassettes in cassette cases and position vertically.

FEATURES

High-quality video recording and playback
Conforming to the S-VHS format which offers a picture with well over 400 lines of horizontal resolution, the BR-S610E employs the Standard Play mode only to ensure the highest possible basic performance and the best possible overall picture quality.

Editing operability
The BR-S610E has 45-pin parallel remote control connector, so that it can be used for the feeder recorder with the RM-86U/RM-G810U Editing Controller.

Audio dub function
The BR-S610E allows the normal audio channel-2 soundtrack to be replaced, so that a narration etc. can be added to a previously recorded tape.

Heavy-duty mechanism
Independent direct-drive motors are provided for the head drum, capstan and reels. For higher reliability and durability, all components are mounted on a heavy-duty aluminum diecast chassis.

Separate Y/C input/output connectors
In addition to the composite video signal, the luminance (Y) and chroma (C) signals can be input and output as separated signals, thereby producing clear colour pictures with minimized colour noise. To suppress deterioration of colour signals in dubbing, and thereby improve the overall quality of colour dubs, the Y/C 627 mode is also available.

Variable-speed dial search and jog control
Convenient, easy-to-operate, concentric control dials are provided for fast and accurate location of edit points. Turning the outer dial varies the tape speed from still to 10 times normal in either direction. The inner dial functions as a jog control which regulates the tape movement in either direction, accurately responding to the speed with which the dial is turned.

Hi-Fi VHS audio with dynamic range of more than 87 dB
A pair of rotary FM-audio heads is provided exclusively for the recording and playback of Hi-Fi audio signals with an extended frequency response and dynamic range. Separate input terminals are provided for Hi-Fi and normal audio so that different soundtracks can be recorded on these tracks. The normal audio is two-channel with the Dolby* noise reduction system.

* Dolby noise reduction manufactured under license from Dolby Laboratories Licensing Corporation. "DOLBY" and the double-D symbol ⧈ are trademarks of Dolby Laboratories Licensing Corporation.

Manual audio/video level control
The recording level of the video and audio signals can be controlled manually by referring to independent level meters. The video level meter also serves as a tracking meter during playback.

Newly developed auto-cleaning mechanism
The video and Hi-Fi audio heads are automatically cleaned when the tape is loaded or unloaded.

Concentrated indications of recorder status settings
Easy-to-see LED indicators are provided on the front panel for servo lock, CTL pulse, time code, Dolby NR and Hi-Fi Audio.

Front panel test points
To facilitate alignment, test points for the video head and Hi-Fi audio head output signals are provided on the front panel.

Half-loading mechanism
A new tape loading mechanism, called "half-loading", is employed to enable CTL pulses to be read even in the FF and REW modes.

Other features
- External sync and RF output (for DOC) connectors
- Self-illuminated function buttons
- Automatic repeat playback and counter Memory function
- 19-Inch EIA rack mounting possible
- Selectable audio monitor output (AUD-1/AUD-2/MIX/Hi-Fi/Normal)
- Digital time counter in hours, minutes and seconds
- Framing servo on/off switch
- Headphone jack with adjustable output level
- Recording and playback of EBU time code
- Timer recording and playback
- Hour meter showing up to 1000 hours
- Two VIDEO LINE OUT connectors and two separate Y/C IN/OUT (Y/C 627 & Y/C 443) connectors
- Hi-Fi audio output and Hi-Fi/normal switchable audio output connectors
- Hi-Fi audio recording on/off switch
- Microprocessor-controlled diagnostic warning system for detection and indication of electronic and mechanical malfunctions.

CONTROLS AND CONNECTORS

Front Panel

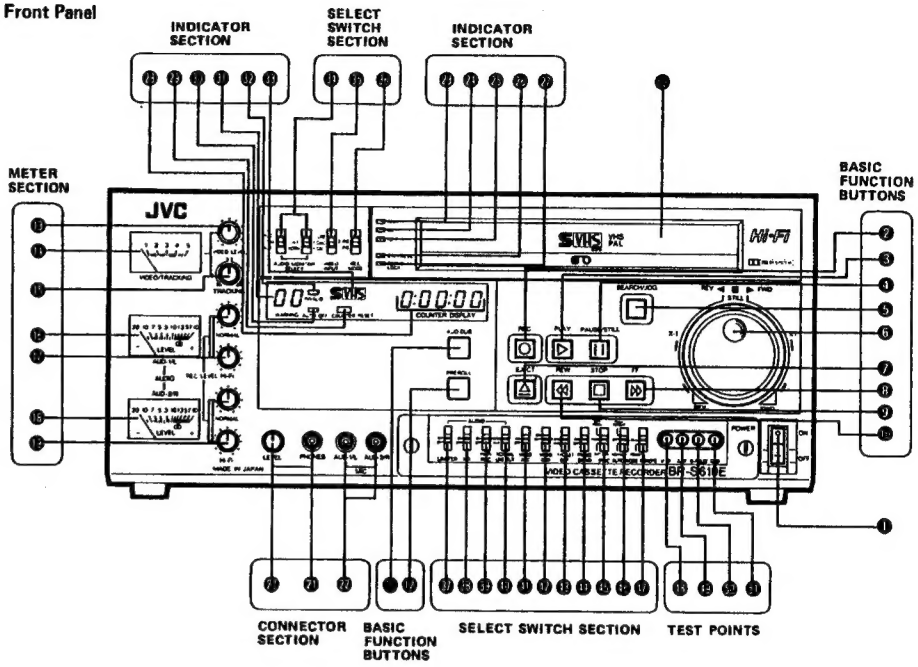

BASIC FUNCTION BUTTONS

❶ POWER switch
Set to ON to turn the power on. The indicator will light and the level meters will be illuminated.

❷ Record button (REC)
Press together with the PLAY button for recording. Audio is recorded on both channels, if there are signals for them. The REC and PLAY buttons will remain illuminated during recording. When the REC button is pressed during playback, the monitor screen switches from the playback picture to the E-E mode picture, allowing you to monitor the signals applied to the input terminals.

❸ PLAY button
Press to start playback. The PLAY button will be illuminated. Press together with the REC button to start recording.

❹ PAUSE/STILL button
Press to stop the tape temporarily during recording or playback. The button will be illuminated. To release the Pause or Still mode, press any button except EJECT corresponding to the mode you wish to enter next.

❺ SEARCH/JOG button
Pressing this button enables the rotary search/jog dials. The button will be illuminated.

❻ Rotary search/jog dials
Constructed in the form of dual concentric controls, the outer control functions as a search dial and the inner one functions as a jog dial.

Search dial: When the dial is set to STILL (centre position), the Still mode is entered with the STILL indicator lit. When the dial is turned clockwise toward FWD, forward playback takes place at a speed corresponding to the dial setting, with the FWD indicator lit. When the dial is turned counterclockwise toward REV, reverse playback takes place at a speed corresponding to the dial setting, with the REV indicator lit. The search speed is continuously variable between 1/30 and10 times normal in both directions. If the control mode is changed by any function button, the dial setting remains unchanged and the corresponding speed is instantly engaged by pressing the SEARCH/JOG button.

Jog dial: Use the jog dial to view the tape manually; the tape moves at a speed with which this dial is turned. When the dial is turned clockwise from the STILL position, forward playback takes place, and vice versa. When the dial is stationary, the picture is still. The jog mode cannot be used in the Edit or Record mode.

❼ EJECT button
Press to eject the cassette. This button can be pressed in the Stop mode or immediately after the STOP button has been pressed.

❽ Fast Forward button (FF)
Press to fast forward the tape. While the tape is being fast forwarded, the FF button will remain illuminated. This button can be pressed in any mode except Record, or Eject. To release the Fast Forward mode, press the PLAY, STOP or REW button depending on the mode you want to enter next. Pressing this button in the Play or Search mode enables high-speed playback at about 10 times normal speed in the forward direction. During search the PLAY and FF buttons will remain illuminated.

❾ STOP button
Press to stop the tape. When the STOP button is pressed, the tape is unloaded and then the Stop mode is engaged. The STOP button blinks during tape unloading and remains lit upon completion of unloading.

❿ Rewind button (REW)
Press to rewind the tape. While the tape is being rewound, the REW button will remain illuminated. This button can be pressed in any mode except Record or Eject. To release the Rewind mode, press the PLAY, STOP or FF button depending on the mode you want to enter next. Pressing this button in the Play or Search mode enables high-speed playback at about 10 times normal speed in the reverse direction. During search the PLAY and REW buttons will remain illuminated.

⓫ AUDIO-DUB button
NORMAL AUDIO channel-2 soundtrack can be dubbed. For audio dubbing, press this button together with the PLAY button.

⓬ PREROLL button
Operative in the Still mode. When this button is pressed after the edit point has been determined by pressing the PAUSE/STILL button, the tape is rewound by about 10 seconds of program time and enters the Edit Standby mode. (The PLAY and PAUSE/STILL buttons will be illuminated.) To cancel this mode, press the PLAY button.

METER SECTION

❶ VIDEO LEVEL control
To adjust the video recording level manually, set the VIDEO AGC switch ❷ to OFF and turn this control so that the meter ❸ deflects into the green area.

❸ VIDEO/TRACKING meter
Functions as a video level meter during recording and as a tracking meter during playback.

❹ TRACKING control
To remove noise bars or to correct Hi-Fi tracking during playback, turn this control so that the meter ❸ makes its maximum deflection.

❺ AUDIO-1/LEFT AUDIO level meter
Indicates the recording level of the normal audio-1 or Hi-Fi left-channel signal during recording, the playback signal during playback or the E-E signal in any other mode. Switching between normal and Hi-Fi is done with the AUDIO MONITOR SELECT switch.

❻ NORMAL/Hi-Fi (AUD-1/LEFT) REC LEVEL controls
To adjust the normal audio-1 or Hi-Fi left-channel signal, turn the corresponding control so that the meter ❺ deflects to "0" with the loudest signal.

❼ AUDIO-2/RIGHT AUDIO level meter
Indicates the recording level of the normal audio-2 or Hi-Fi right-channel signal during recording, the playback signal during playback or the E-E signal in any other mode.

❽ NORMAL/Hi-Fi (AUD-2/RIGHT) REC LEVEL controls
To adjust the normal audio-2 or Hi-Fi right-channel signal, turn the corresponding control so that the meter ❼ deflects to "0" with the loudest signal.

CONNECTOR SECTION

❾ PHONES LEVEL control
Adjusts the output level of the PHONES jack.

❿ PHONES jack
Connect a set of headphones for monitoring the sound being recorded.

⓫ MIC jacks (AUD-1/LEFT, AUD-2/RIGHT)
Connect microphones to switch the input signal from line to microphone.

INDICATOR SECTION

⓬ Hi-Fi indicator
Lights when Hi-Fi audio signals are being recorded.

⓭ Dolby NR indicator
Lights when the built-in Dolby* noise reduction system is activated.

⓮ Time Code indicator (TC)
Remains lit when the rear panel TIME CODE/AUDIO select switch ⓯ is in the TIME CODE position.
Note: When the indicator is lit, the NORMAL audio-2 signal is muted.

⓯ CTL PULSE indicator
Lights when a tape with no control pulse recorded is played back.

⓰ SERVO LOCK indicator
Lights when the servo system is locked for normal operation.

⓱ Realtime tape counter
Shows tape time in hours, minutes and seconds by counting the number of CTL pulses. This tape counter does not function when a tape with no CTL pulses is being played back. The display starts blinking 5 to 10 minutes before the tape end during recording.

⓲ COUNTER RESET button
Press to reset the tape counter to zero.

⓳ AUTO OFF indicator
If the tape running is in some way incorrect, this indicator will light.

⓴ WARNING display
Two-digit numbers indicate various malfunctions for easy troubleshooting. For more details refer to pages 18 and 19.

㉑ INVALID indicator
Lights when the REC and PLAY buttons are pressed in the S-VHS recording mode with a standard VHS tape loaded. No change in mode will take place, but the previous operation will continue. The INVALID indicator will also light in YC627 dubbing with the recorder in the S-VHS mode and the player in the VHS mode, and in VHS recording with the player in the S-VHS mode and the YC627 OUT select switch set to S-VHS.

㉒ S-VHS indicator
Lights when the S-VHS recording mode is selected. In playback of S-VHS recordings, lights automatically.
Also lights when playing back the blank section of VHS tapes.

SELECT SWITCH SECTION

㉓ AUDIO MONITOR SELECT switches
These switches select the audio output available from the PHONES jack and the AUDIO MONITOR connector. The Hi-Fi/NORMAL switch also functions to switch the audio level meters between Hi-Fi and NORMAL.
Hi-Fi: To monitor the Hi-Fi audio signals.
NORMAL: To monitor the NORMAL audio signals.
AUD-1/LEFT: To monitor the NORMAL audio-1 or Hi-Fi left-channel signal.
MIX: To monitor a mixture of both channels.
AUD-2/RIGHT: To monitor the NORMAL audio-2 or Hi-Fi right-channel signal.
Note:
The output from the AUDIO OUT NORMAL RIGHT connector is shorted if the TC indicator ⓮ is lit.

㉔ VIDEO INPUT select switch
Selects the video input signal applied to the VIDEO IN LINE, YC443 or YC627 connector.
LINE: Set to this position when recording the composite video signal applied to the VIDEO IN LINE connector.
YC443: Set to this position when recording the separated Y/C signals conforming to the YC443 system (S-VHS signal) applied to the YC443 connector.
YC627: Set to this position when recording the separated Y/C signals conforming to the YC627 system (Y and down converted C signals) coming from the 7-pin DUB OUT connector applied to the YC627 connector.

㉕ REC MODE select switch
S-VHS : To record in the S-VHS mode (SP).
VHS : To record in the VHS mode (SP).

㉖ AUDIO LIMITER switch
Set to ON to activate the built-in audio limiter circuit. Manual level control is possible even when the limiter circuit is on.

㉗ Audio noise reduction switch (NR)
Set to ON to activate the built-in Dolby* noise reduction system for the NORMAL audio signal.

㉘ Hi-Fi REC select switch
ON: Set to ON to record the HI-Fi audio signal.
OFF: Set to OFF when recording the Hi-Fi audio signal is not desired.

㉙ NORMAL LINE OUT select switch
Selects the output signal from the AUDIO OUT NORM/Hi-Fi connectors.
NORM: Set to this position to output the normal audio signals from the AUDIO OUT NORM/Hi-Fi connectors.
Hi-Fi: Set to this position to output the HI-Fi audio signals from the AUDIO OUT NORM/Hi-Fi connectors.

㉚ VIDEO AGC switch
Set to ON to activate the built-in video AGC circuit.

㉛ VIDEO DUB switch
OFF: Normally set to this position. The detail enhancer (only VHS mode) circuit will be ON in recording, and the noise reduction circuit will be ON in playback.
ON: In this position, the detail enhancer (only VHS mode) circuit is OFF in recording, and the noise reduction effect is reduced in playback. Set the switch to this position when using the BR-S610E as the player in dubbing.

㉜ YC627 OUT select switch
S-VHS: In YC627 dubbing with an S-VHS recorder (BR-S-810E/BR-S610E) in the S-VHS mode, set the player to this position.
VHS: In YC627 dubbing with a VHS recorder (BR-8600E/BR-6600E) or with an S-VHS recorder (BR-S810E/BR-S610E) in the VHS mode, set to this position.

⓮ FRAME SERVO switch
Normally set this switch to ON. When tapes containing random-interlaced or low-S/N video signals are used, set to OFF.

⓯ SYNC select switch
Selects between different reference sync signals for the servo system during recording and playback.
EXT (REC): Set to this position when using the BR-S610E as a recorder in the external sync mode.
EXT (PB): Set to this position when using the BR-S610E as a player in the external sync mode.
VIDEO: Set to this position when recording or playing back using the input video signal as a reference signal.
For more information refer to "REFERENCE SYNC SIGNALS on page 15.

⓰ AUTO MODE switch
Selects between different automatic operations.
FULL REPEAT: For repeated playback from the beginning of the tape.
OFF: No automatic operation.
MEMORY: In the Rewind or Fast Forward mode, the tape will stop automatically at the counter reading of "0" or a few frames away from "0".

⓱ REMOTE switch
LOCAL: Set to this position when the BR-S610E is to be controlled with its own function buttons. (With this switch set to the LOCAL position, the remote control unit connected to the rear panel 45-pin REMOTE connector will not function.)
REMOTE: Set to this position when the BR-S610E is to be remote-controlled with the remote control unit connected to the 45-pin REMOTE connector. (No function buttons of the recorder except STOP and EJECT will function when this switch is set to the REMOTE position.)

TEST POINTS

⓲ V-RF test point
The video head signal is output in the form of an FM signal during playback, allowing clogged or worn heads to be detected.

⓳ A-RF test point
The Hi-Fi audio signal is output in the form of an FM signal during playback, allowing clogged or worn heads to be detected.

⓴ D-PULSE pin
Connect to the external trigger terminal of an oscilloscope for a sync signal.

㉑ GND pin
Connect to the ground terminal of an oscilloscope.

㉒ Cassette loading slot
With the POWER switch set to ON, insert a video cassette with its labelled edge facing toward you. The cassette carriage will automatically take control and retract the cassette into the correct loaded position.

Rear Panel

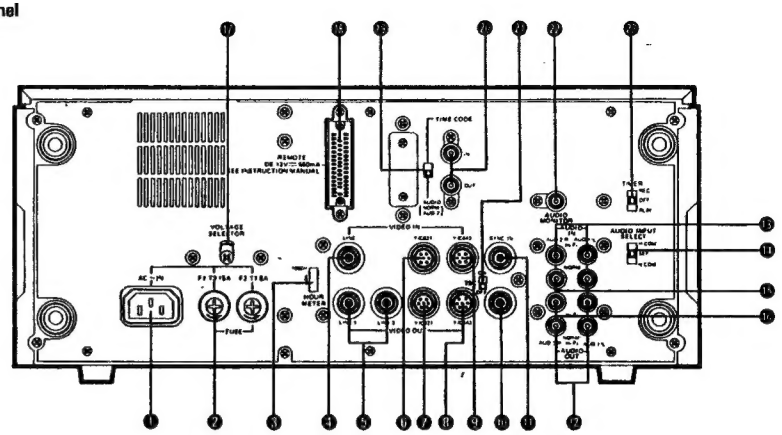

❶ AC input socket (AC IN)
Connect to 110/127/220/240 V AC, 50/60 Hz power outlet.

❷ FUSE holder

❸ HOUR METER
Indicates the total operating time. After 1,000 hours of operation, the red line moves to the top end of the scale.

❹ VIDEO IN LINE connector
Input connector for the composite video signal.

❺ VIDEO OUT LINE connectors
Output connectors for the composite video signal. The same signal is output via these connectors in parallel.

❻ VIDEO IN YC627 connector
Receives the Y/C627 signal (separated luminance and down converted signals) via a Y/C cable.

❼ VIDEO OUT YC627 connector
Delivers the Y/C627 signal via a Y/C cable.

❽ VIDEO OUT YC443 connector
Delivers the Y/C443 signal to be monitored. Connect to a monitor equipped with an S-VIDEO input terminal using an optional Y/C cable.

❾ VIDEO IN YC443 connector
Receives the Y/C443 signal (separated luminance and chroma signals) via a Y/C cable.

❿ DOC RF OUT connector
For connection to a DOC (Dropout Compensator) or the DOC input terminal of a time base corrector.

⓫ External sync signal input connector (SYNC IN)
Accepts an external reference sync signal when the recorder is to be operated in the external sync mode. The external sync signal can be a composite sync or composite video signal.

⓬ AUDIO OUT NORM/HiFi connectors (LEFT, RIGHT)

⓭ AUDIO IN Hi-Fi connectors (LEFT, RIGHT)

⓮ AUDIO INPUT SELECT switch
H COM: Set to this position to record the audio signals being input to the AUDIO IN Hi-Fi connectors onto both the Hi-Fi and Normal audio tracks. "Hi-Fi Combined" recording.
SEP: Set to this position to record the audio signals being input to the AUDIO IN Hi-Fi connectors onto the Hi-Fi audio track, and to the AUDIO IN NORMAL connectors onto the Normal audio track. "Separate" recording.
N COM: Set to this position to record the audio signals being input to the AUDIO IN NORMAL connectors onto both the Hi-Fi and Normal audio tracks. "Normal Combined" recording.

⓯ AUDIO IN NORMAL connectors (LEFT, RIGHT)

⓰ AUDIO OUT Hi-Fi connectors (LEFT, RIGHT)

⓱ VOLTAGE SELECTOR
See "POWER SYSTEM" on page 1.

⓲ REMOTE control connector
Connect a JVC 45-pin remote control unit.

⓳ TIME CODE/AUDIO select switch
Set to TIME CODE to record the time code on the Normal audio track channel 2. Normally set this switch to AUDIO.

⓴ TIME CODE IN/OUT connectors
Connect a time code generator to the IN connector when you want to record the EBU time code. The TIME CODE/AUDIO select switch must be set to TIME CODE. To obtain the time code for editing, connect a time code reader to the OUT connector.

㉑ Time base corrector switch (TBC)
Normally set to OFF. When you use a TBC, set it to ON. Also set the SYNC select switch to EXT (PB).

㉒ AUDIO OUT MONITOR connector
The audio signal selected by the AUDIO MONITOR switch is available via this connector.

㉓ TIMER select switch
Power can be switched on using an ordinary timer.
REC: The BR-S610E starts recording when the preset time is reached, and at the end of the tape, enters the Rewind mode automatically and stops at the beginning of the tape.
OFF: No timer operation.
PLAY: The BR-S610E starts playing back when the preset time is reached, and at the end of the tape, enters the Rewind mode automatically and stops at the beginning of the tape.

CONNECTIONS

VIDEO EQUIPMENT CONNECTION

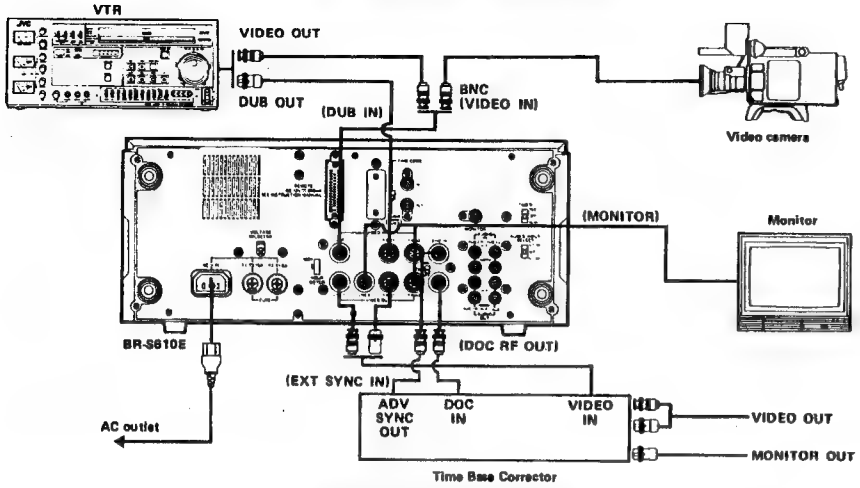

AUDIO EQUIPMENT CONNECTION

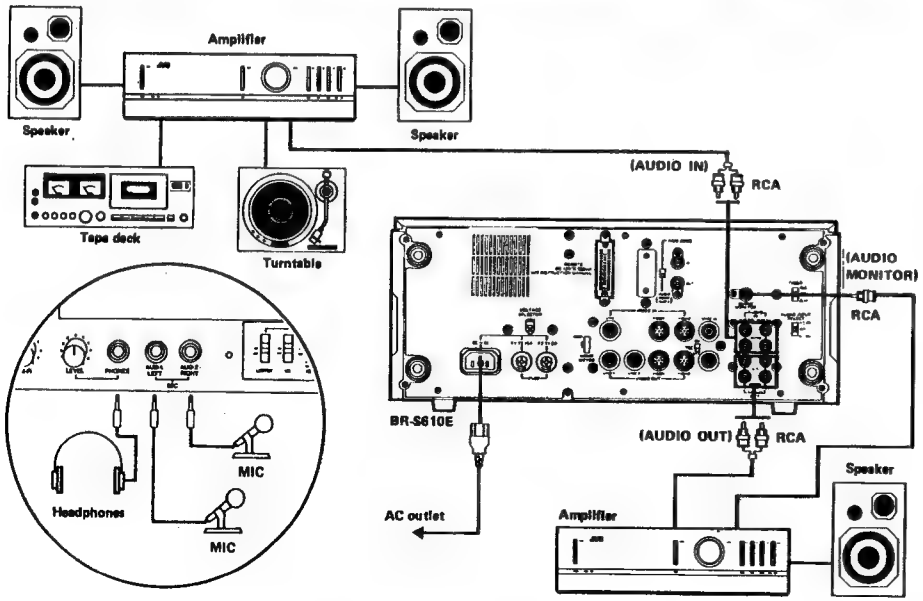

CONNECTION FOR TAPE-TO-TAPE EDITING

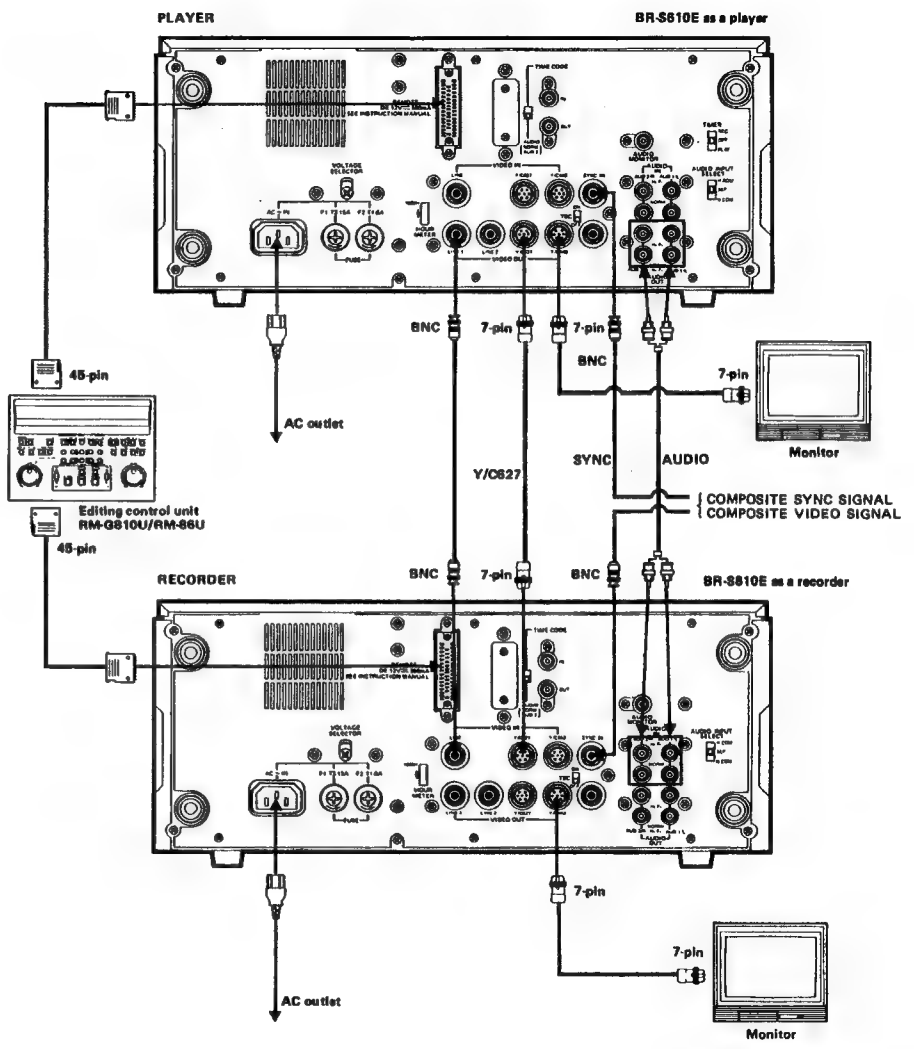

LOADING AND UNLOADING A VIDEO CASSETTE

LOADING

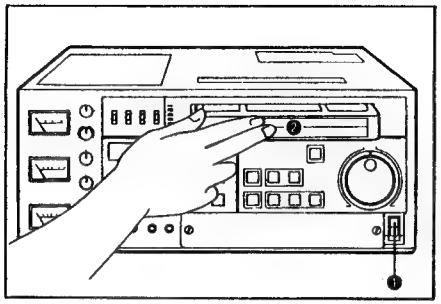

❶ Set the POWER switch to ON. The POWER indicator will light.
❷ Insert a cassette with its labelled side facing you. The cassette will automatically be retracted and loaded in the correct position.
- With a cassette inserted, the red door flap appears and displays the ⏏O mark to indicate "cassette inserted".
- The STOP button lamp will illuminate.
- The automatic loading mechanism will operate only when the cassette is inserted correctly.
- If loading does not result in positioning the cassette correctly, it will automatically be ejected after about 6 seconds.

Note:
After unpacking your new recorder the red door flap with the "cassette inserted" mark may be displayed. This is not due to any defect of the unit. Simply insert a cassette. After the first loading/unloading cycle, the door will function properly to show the blue flap when no cassette is inserted and the red flap when a cassette is inserted.

UNLOADING

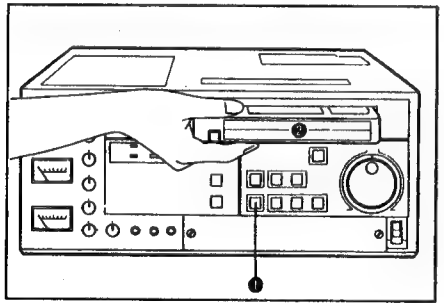

❶ Press the EJECT button in the Stop mode. The cassette will automatically be ejected.

❷ Remove the cassette from the cassette loading slot.
- The EJECT button can be pressed immediately after the STOP button has been pressed. The logic circuit will memorize the sequence; first setting the recorder in the Stop mode and then automatically changing it to the Eject mode.

PLAYBACK

PREPARATION

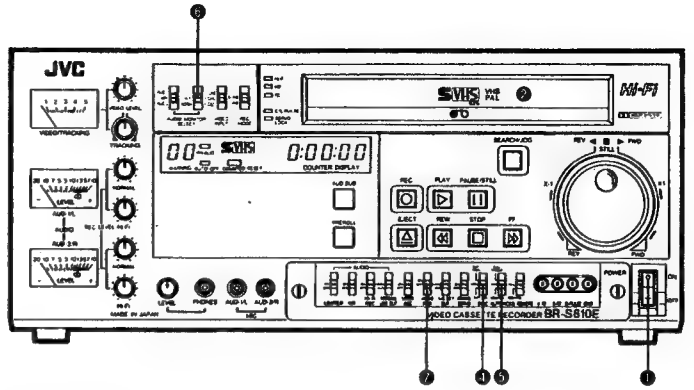

❶ Set the POWER switch to ON.
❷ Insert a pre-recorded video cassette into the cassette loading slot.
❸ When a time base corrector is used, set the rear panel TBC switch to ON and the SYNC switch to EXT (PB).
❹ Set the SYNC switch to VIDEO.
- If an external sync signal is used, set it to EXT (PB).

❺ Set the AUTO MODE switch as required. See page 13.
❻ Set the AUDIO MONITOR SELECT switch to either Hi-Fi or NORMAL.
❼ Set the VIDEO DUB/YC627 OUT swtich as required. Refer to page 6.

Notes:
- If a video signal is applied to either VIDEO IN connector, playback is locked to this video signal. Therefore, if the sync signal contained in this video signal is not stable, the playback picture will be distorted when the SYNC switch is in the VIDEO position.
- The SEARCH x 1 mode can be used to change the reference signal selected by the SYNC select switch to an internal oscillator signal for distortion-free search.
- When dubbing to other recorders with this unit used as the player, set the YC627 OUT select switch according to the recorder and mode. For details, refer to page 6.

PROCEDURE

❶ Press the PLAY button. The tape will start running and the playback picture will appear on the monitor screen.
❷ Press the STOP button to stop playback.

Tracking adjustment
When a tape recorded with a different recorder is played back, noise bars may appear or the picture may be blurred. In such a case, turn the TRACKING control to correct the picture referring to both the monitored picture and the tracking meter (VIDEO/TRACKING level meter). Optimum tracking is obtained when the meter makes its maximum deflection.
Note:
It is recommended that tracking be checked even when tapes recorded using this unit are played back.

Input monitoring during playback
If you wish to monitor the signal applied to the input connector during playback, press the REC button in the Play mode. The input signal will appear on the monitor screen.
Note:
Do not press the REC and PLAY buttons simultaneously, otherwise the unit enters the Record mode and any recordings on the tape are erased.

DIAL SEARCH & SHUTTLE SEARCH

SHUTTLE SEARCH AND JOG CONTROL

The arrangement of the search dial and the jog dial is concentric; the outer control functions as a search dial and the inner, a jog dial. These functions are especially convenient for quick location of edit points.

SEARCH

Turn the outer dial until the desired search speed is reached.

- The search speed is continuously variable between 1/30 and 10 times normal in both directions.
- The STILL position (center click-stop) provides a still picture.
- Turn the dial clockwise to search in the forward direction and counterclockwise to search in the reverse direction.
- The X1 click-stop provides normal speed in the forward direction and X-1, in the reverse direction.
- There is another click-stop between X1 and the fully clockwise position and between X-1 and the fully counterclockwise position. These are the positions for 6 times normal speed in forward and reverse respectively.
- The fully clockwise position and the fully counterclockwise position provide about 10 times normal speed.

Note:

- When the dial is set to the X1 click-stop, the internal sync mode is automatically entered.

JOG

Turn the inner dial.

- A still picture is obtained at any moment you stop turning the dial.
- To move the picture in the forward direction, turn the dial clockwise; to move it in the reverse direction, turn counterclockwise.

To cancel the search or jog mode:

- Press the PLAY, PAUSE/STILL, FF, REW or STOP button according to the mode you want to enter next. The search dial setting remains unchanged.

Notes:

- During search, an extra pair of video heads operate and pick up only even-number fields of the picture. When the dial is set to X1, frame playback is engaged.
- If the Still mode continues for too long a time, the tape could be damaged. Therefore, if you leave the unit in the Still mode for more than about 3 minutes 45 seconds, the video track being traced will shift automatically.

SEARCH REW/SEARCH FF

When the REW or FF button is pressed in the Stop mode, normal rewind or fast forward takes place. When these buttons are pressed in the Play, Search or Still mode, the tape runs at about 10 times normal speed in the corresponding direction. The buttons can be locked and the indicator lights. You can follow the speeded-up picture on the monitor screen.

REPEAT PLAYBACK, COUNTER SEARCH & AUTO REWIND

REPEAT PLAYBACK

When the entire tape, from the beginning to the end, is to be repeated, proceed as follows:

1. Set the AUTO MODE switch to FULL REPEAT.
2. Press the PLAY button to start playback.
   - When the tape reaches its end, it is rewound to the beginning and then played back again automatically. The procedure is repeated as many times as desired.

COUNTER SEARCH

The counter search mechanism functions in conjunction with the tape counter and stops the tape automatically in the Rewind or Fast Forward mode at the counter reading of "0".

1. Press the COUNTER RESET button at a point which you may wish to locate later.
2. Set the AUTO MODE switch to MEMORY.
3. Press the REW or FF button when you need to return to the designated point. The tape will stop automatically at the counter reading of "0".

Notes:

- The counter search mechanism does not function in the Shuttle Search mode.
- The tape may stop at a position slightly deviated from the counter reading of "0".

AUTO REWINDING

When the tape reaches its end in the Play or Record mode, it is automatically rewound to the beginning and then the Stop mode is engaged. The counter search mechanism functions automatically while the tape is being rewound. If the tape reaches its end in the Fast Forward mode, the auto rewind mechanism does not function and the Stop mode is engaged immediately.

RECORDING

PREPARATION

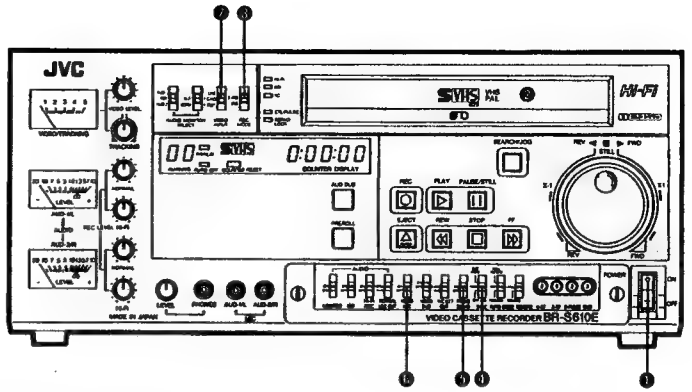

1. Set the POWER switch to ON.
2. Insert a video cassette into the cassette loading slot.
3. Set the REC MODE select switch.
   VHS :To record in the VHS SP mode.
   S-VHS: To record in the S-VHS SP mode. (Be sure to use an S-VHS tape.)
4. Set the SYNC switch to VIDEO.
   - If an external sync signal is used, set it to EXT (REC).
5. Set the FRAME SERVO switch to ON if framing servo is to be applied to recordings.
   - It is recommended that this switch be set to OFF when you record from a tape whose playback picture has an inferior S/N ratio, a multi-generation copy, a tape recorded using a random-interlaced ITV camera or a tape edited using another manufacturer's editor.
6. Set the VIDEO AGC switch to ON if the built-in video AGC circuit is to be used.
7. Set the VIDEO INPUT switch as required.

RECORDING LEVEL ADJUSTMENTS

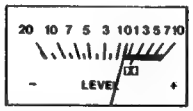

Video level adjustment

- For automatic level control, set the VIDEO AGC switch to ON.
- For manual level control, set the VIDEO AGC switch to OFF and turn the VIDEO LEVEL control so that the VIDEO/TRACKING meter deflects into the green zone while applying the colour bar video signal to be recorded.

Audio level adjustment

- Set the AUDIO INPUT SELECT switch, on the rear panel, depending on the input signal level.
- Turn the AUDIO REC LEVEL control until the AUDIO meter deflects to "0" with the loudest signal. This is the standard adjustment of the audio recording level.
- Set the LIMITER switch to ON to avoid eventual over-level recordings.

PROCEDURE

1. Press the REC and PLAY buttons simultaneously. The Record mode will be engaged and both the REC and PLAY button lamps will light.

   Notes:

   - YC627 dubbing cannot be performed from VHS to S-VHS.
   - In YC627 dubbing using a VHS tape worn by being dubbed several times in the player in the VHS mode, the INVALID indicator may light.

2. Press the STOP button to stop recording.
   - In YC627 dubbing, the top of the EE picture from the recorder may be distorted. This is not due to a defect in the unit. This distortion does not influence recording and playback.
   - In YC627 dubbing, colour flashing may occur at the edit point. In this case, it is recommended to use YC 443 dubbing on composite dubbing.

RECORD PAUSE & ASSEMBLE RECORDINGS

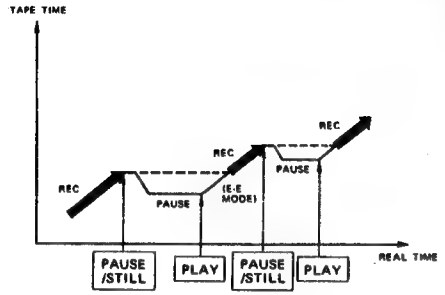

Recording can be stopped temporarily and restarted without detectable distortion in the picture.

1. Press the PAUSE/STILL button during recording. Recording will be stopped with the REC indicator still lit. The tape is automatically rewound by about 2.5 seconds of program time and stops in the Record Pause mode with both the REC and PAUSE/STILL indicators lit. The E-E picture will appear on the screen. When the PAUSE/STILL button is pressed again in this state, the picture recorded immediately before can be seen as a still picture.
   - If recording is restarted immediately after the still picture appears, the top portion of the picture at the edit point may be skewed.
2. To restart recording, press the PLAY button. The tape will be played back for about 2.5 seconds and the mode will switch automatically from playback to recording at the point where the PAUSE/STILL button was pressed.

   Note: In this case, as the colour frame servo does not operate, colour flashing may occur at the edit point.

REFERENCE SYNC SIGNALS

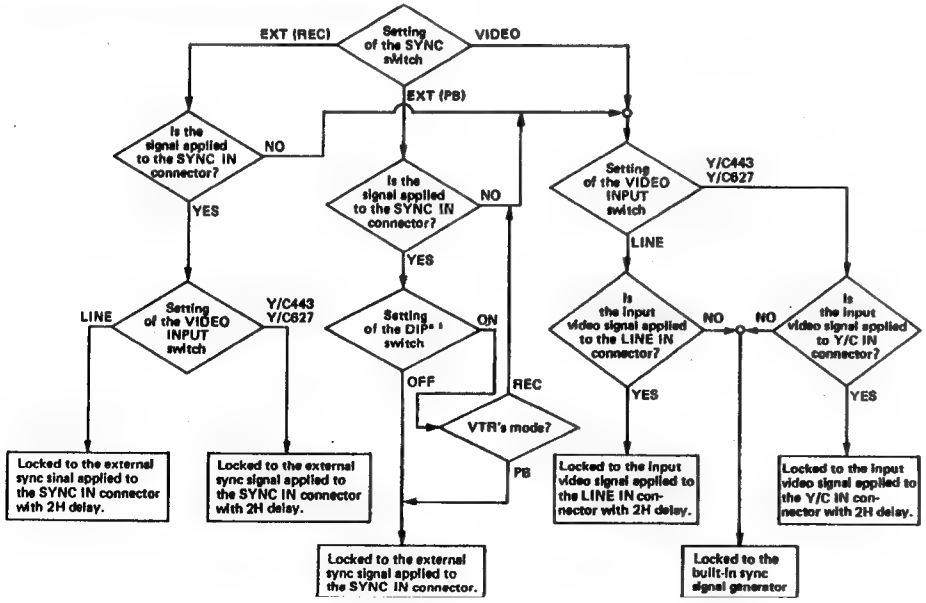

*1 DIP switch: An internal switch. Please consult JVC's service section.

TIMER RECORDING & PLAYBACK

If you use a timer unit of appropriate voltage, the BR-S610E can be played back automatically at a preset time or signals from sources connected to the INPUT connectors can be recorded automatically at a preset time.

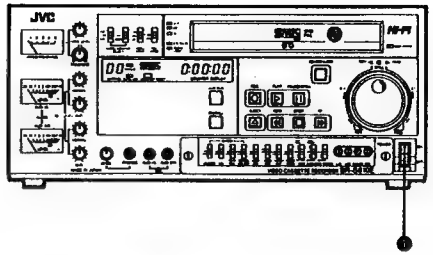

RECORDING

1. Set the power switch ON.
2. Insert a video cassette into the cassette loading slot.
3. Set the TIMER SELECT switch to REC.
   - There is no need to press the REC and PLAY buttons to engage the Recording Standby mode.

PLAY BACK

1. Set the power switch ON.
2. Insert a video cassette into the cassette loading slot.
3. Set the TIMER SELECT switch to PLAY.
   - There is no need to press the PLAY button to engage the Playback standby mode.

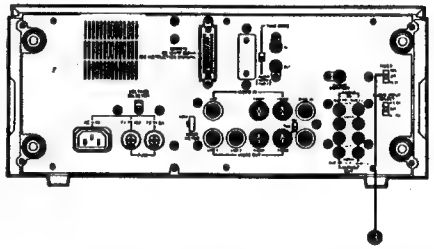

Notes:

- When the tape reaches its end during timer recording or playback, the tape is automatically rewound to the beginning and stops. Therefore, do not set the timer in such a way that it will switch off power during the process of rewinding.
- To cancel the timer recording or playback mode, set the POWER and TIMER switches to OFF. Then set the POWER switch to ON.
- When the protection tab of the cassette has been removed, timer playback will take place instead of recording.

TAPE END WARNING

Tape end warning is given only during recording.

- The counter display starts blinking about 5 minutes before the end of the tape during recording.

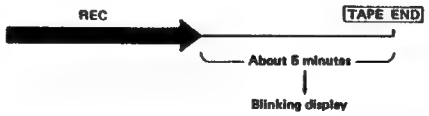

- If recording is started with a cassette with a remaining tape time of only 5 minutes or so, the display starts blinking about 27 seconds after recording has started.

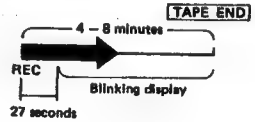

Notes:

- The timing of tape end warning differs slightly depending on the type of cassette.
- With a EC-30 or an SEC-30 compact video cassette (in its adapter), tape end warning does not function.

AUDIO DUBBING

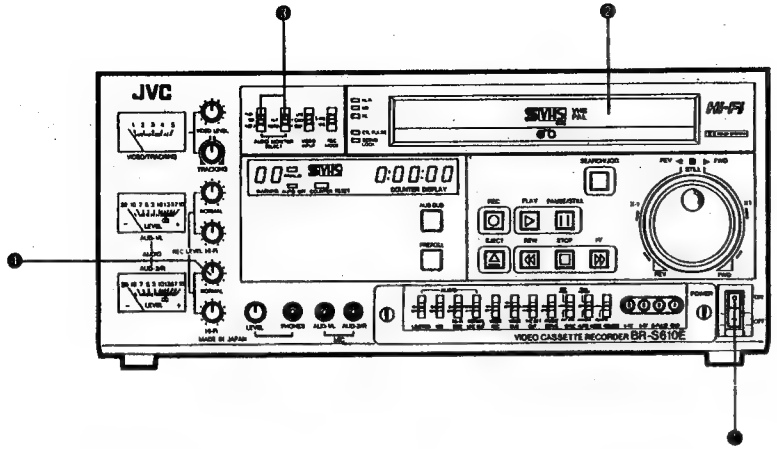

PREPARATION

❶ Set the power switch ON.
❷ Insert a video cassette into the cassette loading slot.
❸ Set the AUDIO MONITOR SELECT switch to NORMAL and MIX or AUD-2.
❹ Adjust the audio channel-2 recording level by turning the AUDIO CHANNEL-2 NORMAL REC LEVEL control.

PROCEDURE

❶ Press the AUD DUB and PLAY buttons simultaneously. The Audio Dubbing mode will be engaged and both the AUD DUB and PLAY button lamps will light.
❷ Press the STOP button to stop audio dubbing.

WARNING DISPLAY

DIAGNOSTIC CODES

The WARNING display indicates various malfunctions and warnings by numerical codes. When the AUTO OFF indicator lights, it is necessary to turn the power off in order to recover the machine.

	Display		Cause of trouble or warning	Symptom/Operation
	Code	AUTO OFF LED		
Sensors	01	ON	Tape-end sensor LED is blown out.	The cassette is ejected. After ejection, cassette loading is not possible.
	02	ON	Moisture condensation.	The cassette is ejected. After ejection, the drum starts rotating and a cassette cannot be loaded. When condensation has been eliminated, the display turns off and cassette loading becomes possible.
	04	ON	Reel servo power insufficient.	All operations stop and all controls become inoperative.
	05	ON	CPU malfunctions.	All operations stop and all controls are inoperative.
	06	OFF	Playback of LP recordings was attempted.	The cassette is ejected. The display turns off when a cassette is inserted again. Then normal operation to restored.
Loading mechanism	32	OFF	Tape cannot be loaded correctly.	The tape will be unloaded and the cassette ejected. Insert cassette again.
	33	ON	Tape cannot be unloaded.	All controls become inoperative.
	36	OFF	Tape cannot be half-loaded.	The cassette is ejected. After ejection, re-loading of a cassette is possible. When the display disappears, normal operation is restored.
	37	ON	Tape cannot be unloaded from the half-loaded position.	All operations stop and all controls are inoperative.
	39	ON	Unloading does not take place after "32".	All operations stop and all controls are inoperative.
Cassette compartment	40	OFF	Cassette compartment does not retract.	The cassette will be ejected. Insert it again.
	41	ON	Cassette compartment does not lift.	Retracting will be performed again. If able to complete retraction, controls become inoperative when the compartment reaches the fully retracted position.
	42	ON	After "41", retracting fails.	All controls become inoperative.

	Display		Cause of trouble or warning	Symptom/Operation
	Code	AUTO OFF LED		
Leader tape detection	56	OFF	Both tape beginning and end sensors are ON because of broken tape, etc.	The cassette is ejected. The display turns off when a cassette is inserted again. Then normal operation is restored.
	57	OFF	Tape end sensor turns ON during half loading.	Rewind mode is engaged and, if the leader tape is detected within about 3 seconds, the cassette is ejected. The display turns off when a cassette is inserted again. Then normal operation is restored.
	58	OFF	Tape beginning sensor turns ON during half loading.	FF mode is engaged and, if the leader tape is detected within about 3 seconds, the cassette is ejected. The display turns off when a cassette is inserted again. Then normal operation is restored.
Rotating system	70	OFF	Drum motor stops.	All controls except EJECT are inoperative. Recovers when a cassette is inserted again.
	71	OFF	Capstan motor stops.	All controls except EJECT are inoperative. Recovers when a cassette is inserted again.
	72	OFF	Supply reel rotates abnormally.	All controls except EJECT are inoperative. Recovers when a cassette is inserted again.
	73	OFF	Take-up reel rotates abnormally.	All controls except EJECT are inoperative. Recovers when a cassette is inserted again.

TEST POINTS

The output signals from the HI-Fi audio heads and video heads are available at the front panel test points. Connect an oscilloscope to these test points to check the performance and condition of the unit.

Connection	Items to be checked	Standard waveform
HI-Fi audio head output 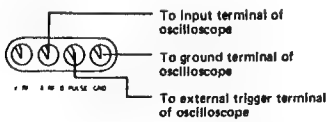 To input terminal of oscilloscope To ground terminal of oscilloscope To external trigger terminal of oscilloscope	• Tape-to-head contact • Tape running stability • Inferior RF after head replacement	• "+" triggered 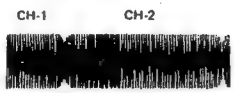 CH-1 CH-2
Video head output 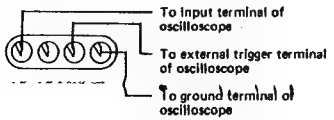 To input terminal of oscilloscope To external trigger terminal of oscilloscope To ground terminal of oscilloscope	• Compatibility of tape pattern • Tape-to-head contact • Tape running stability • Tracking • Video signal recording level • Abnormality in RF Use a 10:1 probe.	• "+" triggered 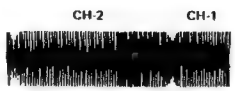 CH-2 CH-1

SPECIFICATIONS

GENERAL

Format	: VHS PAL/S-VHS Europe standard
Power requirement	: AC 110/127/220/240 V~, 50/60 Hz
Power consumption	: 105 watts (Max. 115 watts with the Automatic Editing Control Unit, DC 12 V, 550 mA)
Dimensions	: 42.9(W) x 18.8(H) x 51.4(D) cm (16-3/4" x 7-1/2" x 6-3/4")
Weight	: 23 kg (51 lbs)
Operating temperature	: 5°C to 40°C (41°F to 104°F)
Storage temperature	: -20°C to 50°C (-4° to 122°F)
Tape speed	: 23.39 mm/sec
Recording & Playback time	: Max. 180 min. with JVC E-180/ SE-180
Fast forward/Rewind time	: Less than 4.5 min. for 180 min. tape
Search speed	: Dial Search FWD/REW X ±1/30 to X ±10

VIDEO

Recording and playback	: Rotary four-head, helical scanning system Colour signal: Phase shift, converted sub-carrier direct recording
Video signal system	: PAL-type colour signal S-VHS Europe type Y/C signal
Input	
Line	: 0.5 to 2.0 Vp-p, 75 ohms, unbalanced
YC627	Y: 1.0 Vp-p, 1 k-ohm, unbalanced C: 0.9 Vp-p, 1 k-ohm, unbalanced
YC443	Y: 1.0 Vp-p, 75 ohms, unbalanced C: 0.3 Vp-p, 75 ohms, unbalanced
Output	
Line	: 1.0 Vp-p, 75 ohms, unbalanced
YC627	Y: 1.0 Vp-p, 1 k-ohm, unbalanced C: 0.9 Vp-p, 1 k-ohm, unbalanced
YC443	Y: 1.0 Vp-p, 75 ohms, unbalanced C: 0.3 Vp-p, 75 ohms, unbalanced
Signal-to-noise ratio	: More than 45 dB
Horizontal resolution	: More than 400 lines (S-VHS) More than 250 lines (VHS colour) More then 300 lines (VHS B/W)
External SYNC input	: 0.5 to 4.0 Vp-p, 75 ohms, unbalanced
RF output (DOC)	: 0.5 Vp-p, 75 ohms, unbalanced

AUDIO

Input	
Line	: -6 dBs, 10 k-ohms, unbalanced (Hi-Fi/Normal)
Mic	: -67 dBs, 10 k-ohms, unbalanced
Output	
Line	: -6 dBs, Low impedance, unbalanced (Hi-Fi/Normal
Headphone	: -40 to -20 dBs, 8 to 300 ohms
Monitor	: -6 dBs Low impedance, unbalanced
Signal-to-noise ratio	: More than 43 dB (NR-off) (Normal)
Dynamic range	: More than 87 dB (Hi-Fi)
Frequency response	: 20 to 20,000 Hz (Hi-Fi) 40 to 12,000 Hz (Normal)
Wow and flutter	: Less than 0.005 % WRMS (Hi-Fi) Less than 0.25 % rms (Normal)
Time code	
Input	: 0 dB ±6 dBs, 10 k-ohms
Output	: 0 dB ±3 dBs, Low impedance

CONNECTORS

Video	
Line input	: BNC-type connector
Line output	: BNC-type connectors
YC443/YC627 input/ output	: 7-pin connectors
Audio	
Hi-Fi input/ouput	: RCA-type pin connectors
Normal input/output	: RCA-type pin connectors
Microphones	: 6 mm jacks
Headphones	: 6 mm jack
Remote control	: 45-pin connector
Accessories	: 7-pin cable

Design and specifications subject to change without notice.

SECTION 1
GENERAL DESCRIPTION

1.1 REMOVING EXTERNAL COVERS

1. Top cover

Remove two screws Ⓐ and lift its rear side slightly to take it off.

2. Side covers

Remove four screws Ⓑ from the right side and take off the right side cover.

For the left side cover, proceed to the same as for the right.

3. Front panel

1) Take off the top cover first, and raise the set on the rear panel. In this state, remove seven volume controls together with felt washers.
2) Loosen two screws Ⓒ and take off the switch cover.

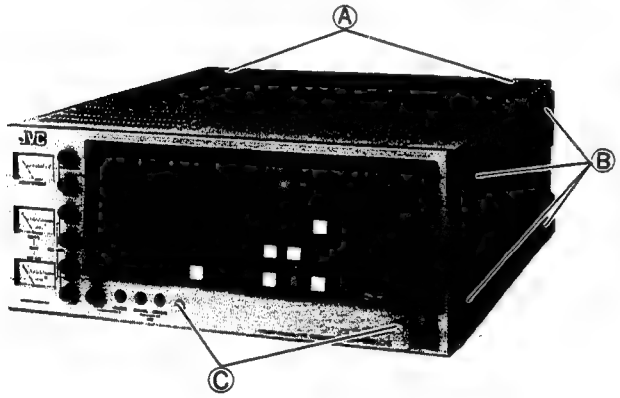

Fig. 1-1

3) Remove screws Ⓓ (two pcs.) and Ⓔ (two pcs.) and disconnect seven connectors which are connected with boards on the front panel. Then, the front panel can be taken off.

Note: Three connectors connected with the FRONT LED board cannot be disconnected unless the board is removed from the front panel.

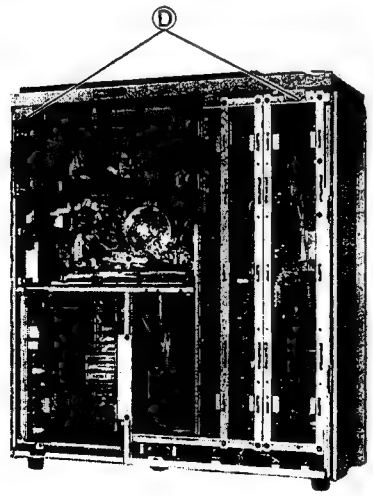

Fig. 1-2

4. Bottom cover

Raise the set on the rear panel and remove five screws Ⓕ to take off the bottom cover.

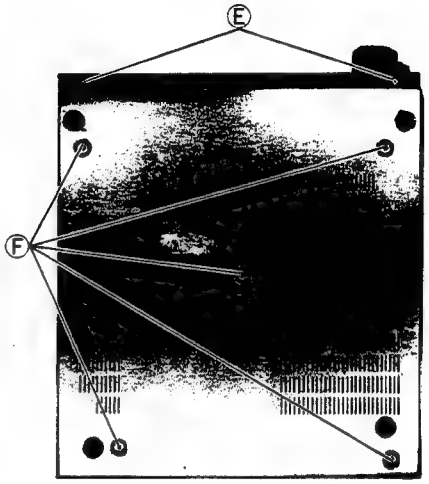

Fig. 1-3

5. Rear panel

1) To take off the rear cover
   Remove six screws Ⓘ and two screws Ⓗ to take off the rear cover.
   Without the rear cover, the rear bracket ass'y is seen on right and the power bracket ass'y on left.
2) To remove the rear bracket only
   Loosen six screws Ⓖ and Ⓗ.
   Pull the left side of the rear bracket to this side and move the rear bracket slightly leftwards to remove it.

Note: Since the rear bracket ass'y is equipped with the REAR board and 45-PIN CONNECTOR board, it can not be taken off unless connectors connected with these boards are disconnected.

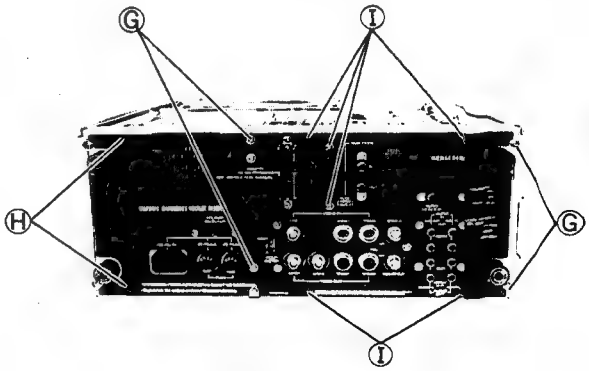

Fig. 1-4

1.2 REMOVING MAIN BOARDS

Note: • When removing and resetting any board, make sure to turn off the power.
• Board(s) taken apart once must be reset or replaced at its original position correctly.
• Location of main boards is classified into several groups as shown in the following table.

Group	Name of Board	Procedure
A	01 REC Y 04 Y/C SEPARATOR 66 REC COLOR 67 FM REC & PB (VIDEO-1) 02 PB Y 03 PB COLOR 65 Y 2H DELAY (VIDEO-2) 07 FM AUDIO 08 NORMAL AUDIO (AUDIO) 10 SERVO-1 11 SERVO-2 12 SYSCON 17 REGULATOR 36 CF SERVO 37 (RF) 2H DELAY 40 SERVO 1 SUB 63 CROSSTALK CANCEL 65 2H DELAY	1) Take off the top cover. 2) For every board to take off, remove two screws fixing the board bracket to the set (except boards of 11 , 36 and 37).
B	05 VIDEO PRE/REC AMP 09 V. ERS/FM AUDIO PRE	1) Face the front panel to this side and take off the top cover. 2) Remove the cassette housing referring to Section 2.5. (for removing the V. ERS/FM AUDIO PRE board)
C	28 45 PIN CONNECTOR 29 REAR	1) Face the rear panel to this side. 2) Remove the rear bracket referring to Section 1.1.
D	14 DRIVER	1) Raise the set on its rear panel and open the bottom cover.
E	19 OPERATION-1 20 OPERATION-2 24 JOG 30 FRONT LED	1) Remove the front panel ass'y referring to Section 1.1.

1. Group A

1-1. REGULATOR board and AUDIO board

1) Lift the board slightly upwards.
2) After disconnecting connectors from the board, it can be taken apart.

1-2. Other boards

1) Pull the board (or together with bracket) upwards to take it off.

Note: Be the most careful at taking off the AUDIO and VIDEO-1 boards.
Rough and repeated handling of boards may possibly cause connecting wires damaged or cut since wires of the AUDIO board contact sub boards of the VIDEO-1 board during the work.

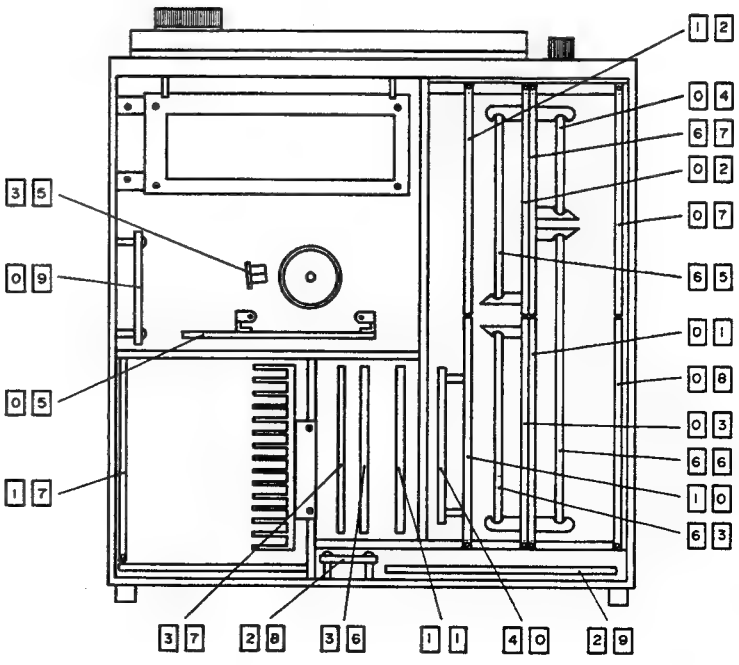

Fig. 1-5

2. Group B

2-1. VIDEO PRE/REC AMP board

1) Remove the cleaner ass'y and disconnect three connectors from the board.
2) Remove two screws fixing the bracket to the drum ass'y.
3) Lift the board upwards to take it off.

Note: When unscrewing and screwing the two screws securing the bracket to the board, pay careful attention to them not to drop into the set.

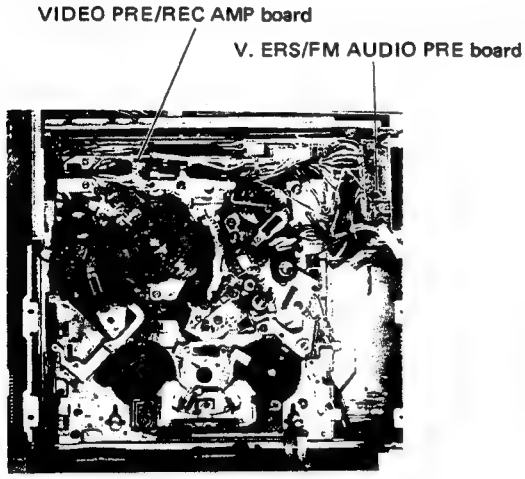

Fig. 1-6

2-2. V. ERS/FM AUDIO PRE board

1) Open the upper cover Ⓐ of two shield covers located on the board.
2) Slightly pull up the board from the set, and remove two PC supports to take off the board.
3) Disconnect three connectors inside the shield cover Ⓐ and open the shield cover Ⓑ with the board being lifted upwards.
4) By disconnecting four connectors inside the cover Ⓑ, the board can be taken off.

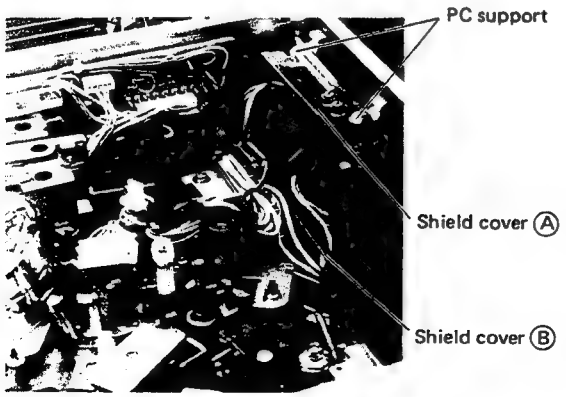

Fig. 1-7

3. Group C

3-1. 45-PIN CONNECTOR board and REAR board

1) Remove screws securing input and output terminals (BNC, RCA PIN, etc.) from the rear bracket.
2) After disconnecting connectors from the objective board, take off the board.

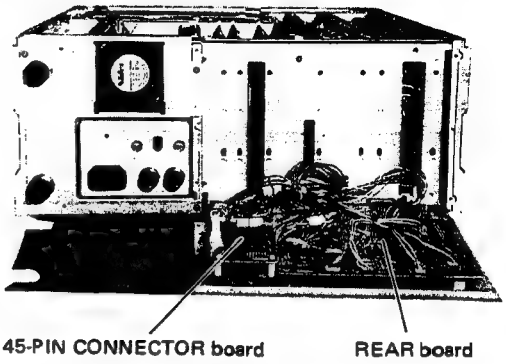

Fig. 1-8

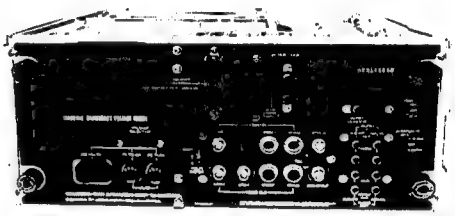

Fig. 1-9

4. Group D

4-1. DRIVER board

1) Remove two screws.
2) Carefully arranging wires, lean the board to this side. (The board can lean to a right angle.)
3) Remove two screws securing the board and bracket and disconnect connectors from the board. Then the board can be taken off.

Note: If the board is leaned without arrangement of wires, it may cause damage of the board and parts (transistors, etc.).

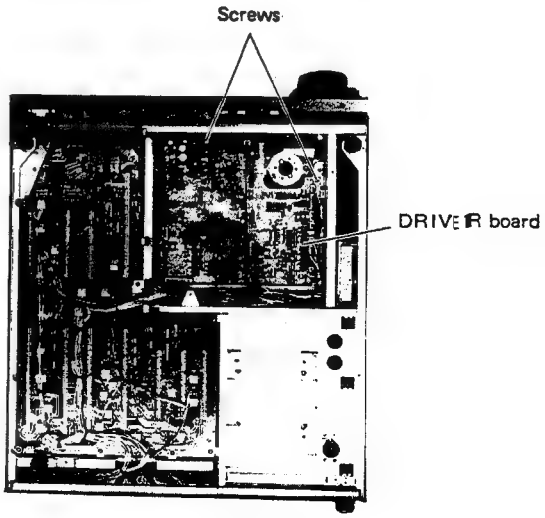

Fig. 1-10

5. Group E

5-1. OPERATION-1/OPERATION-2 boards

The OPERATION-1 board is connected to the COUNTER board, DIRECTION LED board and OPERATION-2 board with flat wires.

1) Take off the FRONT LED and COUNTER boards by removing screws fixing them to the front panel.
2) Remove three screws fixing the OPERATION-1 board.

Note: Between the OPERATION-1 and OPERATION-2 boards a color washer and a slit washer are inserted. When removing screws, be careful not to lose them.

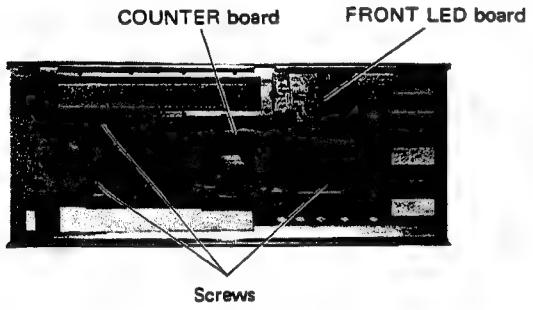

Fig. 1-11

3) Take apart the OPERATION-1, COUNTER and FRONT LED boards (see Fig. 1-12).

Note: During this work to take off the boards, pay the most careful attention to the flat wire connecting the OPERATION-1 and COUNTER boards since it is in contact with the OPERATION-2 board.

4) Take off the DIRECTION LED board by removing a screw.
5) By removing five screws securing the OPERATION-2 board, the OPERATION-1 & -2, COUNTER and DIRECTION LED boards can be taken off.

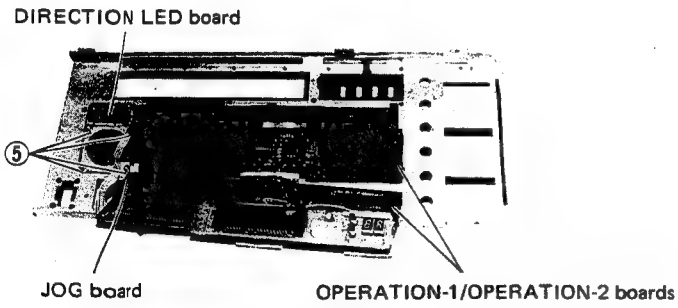

Fig. 1-12

5-2. SEARCH/JOG CONTROL assembly

1) Remove the search dial according to the following.
   Remove the outer rubber ring ①.
   (To do this work, insert a 1.5 mm hex. wrench into a hole ② located on the other side of the search dial's marking.)
   Loosen a hex. screw ③ on the other side of the finger pointer of the JOG dial, and remove this dial.
   Remove the search dial together with three screws ④.
2) After removing the screw ⑤ fixing this assembly to the front panel, take off the main body of this assembly. (see Fig. 1-12)

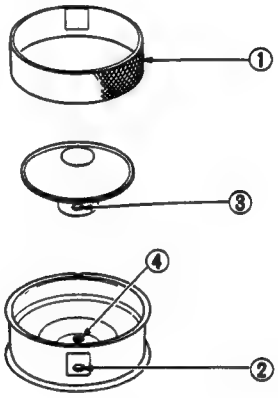

Fig. 1-13

Note: If the JOG board is once removed from the SEARCH /JOG CONTROL assembly (PGS20128D), it requires special adjustment for re-assembling them.
Under these circumstances, it is recommended not to remove the JOG board from the SEARCH/JOG CONTROL assembly.

1.3 DIP SWITCHES

0 2 PB Y board

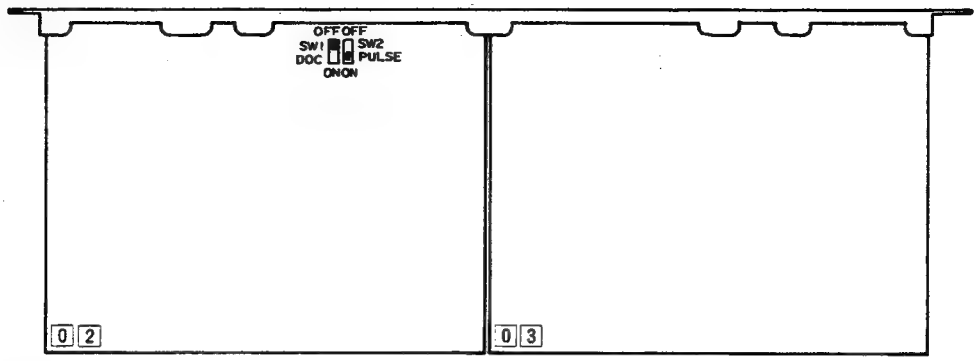

6 6 REC C board

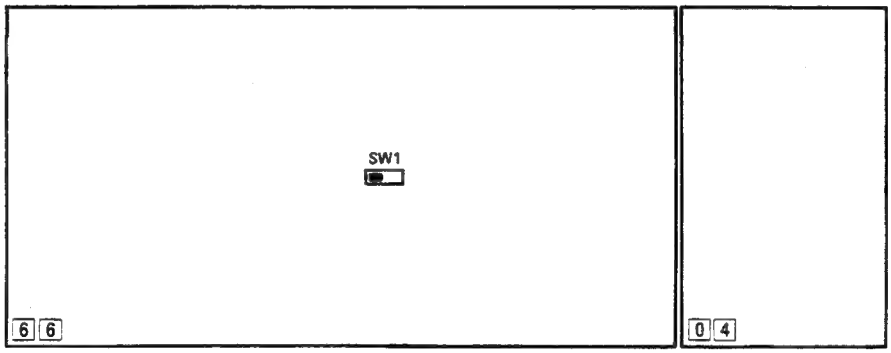

1 2 SYSCON board

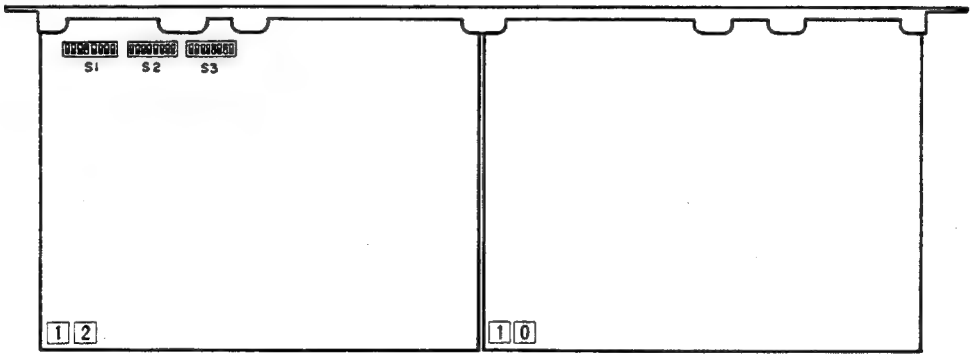

0 2 PB Y board

Symbol No.	Name of Switch	Set Position at Shipment	Function
SW1	DOC	OFF	OFF: Activates DOC circuit. However, turning on TBC switch makes DOC circuit inactive automatically. ON : DOC is active irrespective of TBC switch ON/OFF.
SW2	ADD V PULSE	ON	ON : Adds false V pulse in Search mode. However, turning on TBC switch stops addition automatically. OFF: No false V pulse is added irrespective of TBC switch ON/OFF position.

6 6 REC C board

Symbol No.	Name of Switch	Set Position at Shipment	Function
SW 1	Adjustment Switch	Left	

1 2 SYSCON board

Symbol No.	Name of Switch	Set Position at Shipment	Function
S1-1	FF/REW SPEED	OFF	FF/REW speed selection by Rem-Con (see Note 1). ON : A little slower than the Normal FF/REW speed. OFF: Normal FF/REW speed.
S1-2	Not used	OFF	
S1-3	Not used	OFF	
S1-4	SUB SYNC	ON	ON : When TBC is connected to the recorder side. (see Note 2). OFF: For other use than the above.
S1-5	EDIT ZERO STOP	OFF	When counter reads "0:00:00" in Insert Editting: ON : To stop Edit and to start Preroll. OFF: To continue recording.
S1-6	NO CTL INSERT	OFF	If 'INSERT' takes place into a tape without CTL signal recorded: ON : To set to Insert mode. OFF: To set to Play mode.
S1-7	DIAL SELECT	OFF	When Search dial is turned fully clockwise (counterclockwise): ON : To set to FF (REW) mode after 'Unloading'. OFF: To set to Search X10 (X−10) mode.
S1-8	FULL LOAD STOP	OFF	In Stop mode: ON : Realizes 'Full Loading' state (see Note 3). OFF: Realizes 'Half Loading' state.

Symbol No.	Name of Switch	Set Position at Shipment	Function
S2-1	EE/PB	OFF	During Preroll except in REC mode, video and audio output is: ON : EE OFF: PB (EE in Still mode)
S2-2	WARNING ENABLE	OFF	ON : Warnings of "06", "70"–"73" are disabled. OFF: All warnings are enabled.
S2-3	AUTO REW	OFF	If tape end is detected in Play mode: ON : Sets to Stop mode. OFF: Rewinds to the beginning of tape and then sets to Stop mode.
S2-4	LONG STILL ENABLE	OFF	ON : 'Long Still' function is inactive (see Note 4). OFF: 'Long Still' function is active.
S2-5	REC LOCK OUT	OFF	Recording on tape having the record tab: ON : Impossible. OFF: Possible.
S2-6	Not used	OFF	
S2-7	DIRECT EJECT	OFF	ON : 'Eject' is possible in all modes. OFF: 'Eject' is possible only when STOP LED is lighting.
S2-8	DIRECT SEARCH / JOG	OFF	When SEARCH/JOG dial is turned: ON : SEARCH/JOG mode won't be realized. OFF: SEARCH/JOG mode will be realized.
S3-1	Not used	OFF	
S3-2	Not used	OFF	
S3-3	VIDEO INVALID CANCEL	OFF	In the case such the connection as shown below is set up for dubbing (see Note 5): ON : REC mode (INVALID LED blinks.) OFF : To invalidate REC mode (INVALID LED is coming on.) PLAYER: S-VHS PB → Y/C 627 DUB → RECORDER: VHS REC
S3-4	RM-88E	OFF	Should be set to 'ON' only when RM-88E is connected. If this switch is kept 'OFF' even when RM-88E is connected, pressing EDIT STOP button sets the mode to REC PAUSE simultaneously with 'Preroll End'.
S3-5 S3-6 S3-7	PREROLL TIME	ON OFF ON	Preroll time is set by combination of S3-5, S3-6 and S3-7.

S3			Preroll Time
5	6	7	(sec)
ON	ON	ON	2.4
ON	OFF	OFF	0.5
OFF	ON	OFF	3.0
ON	ON	OFF	5.0
OFF	OFF	ON	7.0
ON	OFF	ON	10.0
OFF	ON	ON	15.0

Note: Do not set the switches to the other position than that indicated respectively.

S3-8	NTSC/PAL	OFF	ON : NTSC OFF: PAL

Note 1: Caution to connection of RM-86E/88E

- Set S1-1 to 'ON' position since connection of RM-86E/88E may cause malfunction of the counter.
- If S1-1 is turned 'ON', it prohibits blinking of REC LED in REC Play mode.
- Make sure that SW1 of the 45-PIN CONNECTOR board is set to "CAP" side (as well as to make sure of settings of the remote controller).

Note 2:

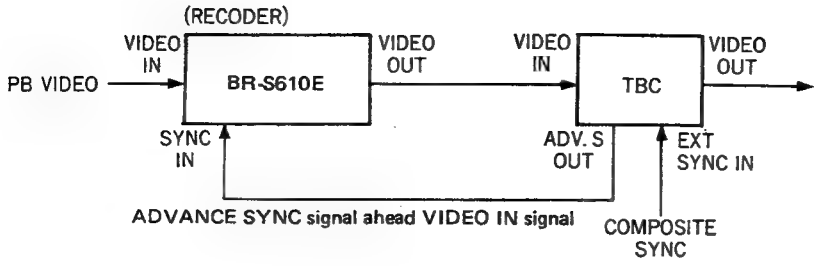

- In a system that TBC is connected to the recorder, there is phase difference (time lag) between video input signal and external sync. signal since advance sync. signal is input to the recorder through its SYNC IN terminal. To use the recorder for ordinary recording, it is required to utilize video input signal as reference signal by switching the SYNC SELECT switch to 'VIDEO' position, while for use it in PB mode, set the select switch to 'EXT (PB)' position to synchronize with ADVANCE SYNC signal. S1-4 saves much time and trouble for this switching operation between REC and PB. In other words, as far as the SYNC switch is set to 'EXT PB' and S1-4 to 'ON', recording synchronizes with VIDEO IN signal while playback does with ADVANCE SYNC signal.

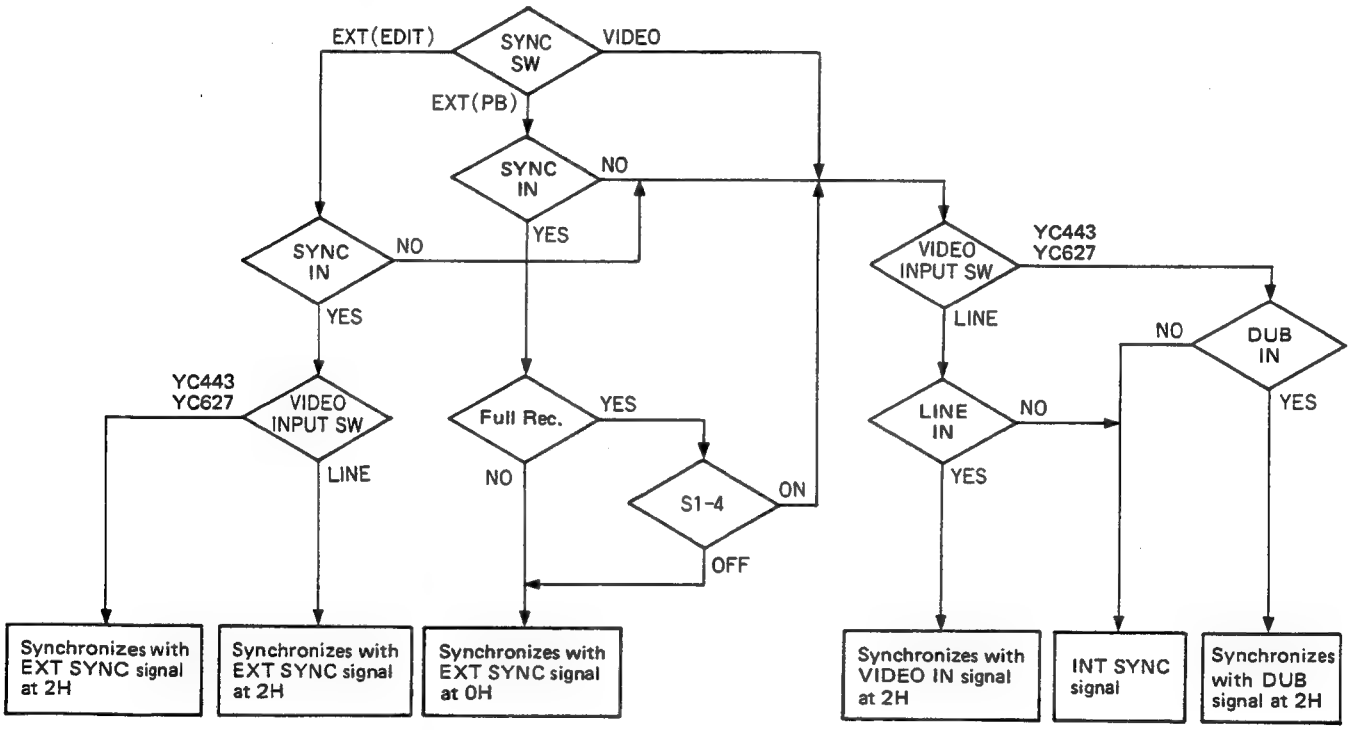

Subnotes: "Synchronizes at 2H" means that output signal is 2H later than the reference signal.

Note 3: FULL LOADING STOP mode

If S1-8 is turned on, Stop mode falls into FULL LOADING condition in which the drum rotates and pinch roller presses tape. To protect tape in this condition the capstan motor rotates in the reverse direction at X1/5 speed for 400 msec to loosen tape slighgly. (If this condition continues for about 10 minutes, the machine automatically enters Stop mode with HALF LOADING.

Note 4: LONG STILL mode

After STILL,

when it elapses 3' 30"– 4' 00" : tape is forwarded at X1/5 speed for about 400 msec.

" 7' 00"– 7' 30" : tape is forwarded at X1/5 speed for about 400 msec.

" 10' 30"– 11' 00" : UNLOADING, then STOP mode.

Note 5: This switch should be set to "OFF" if permitted.

For detail, refer to "INVALID mode" on page 1-11.

45-PIN CONNECTOR board

Symbol No.	Name of Switch	Set Position at Shipment	Function
SW1	CTL/CAP PULSE	CAP	Switches output of pin 35 of the 45-PIN CONNECTOR.

CTL: There is output of CTL pulse even in the FF/REW mode as far as CTL pulse is recorded on the tape.
CAP: There is no output of CAP FG pulse in the FF/REW mode.
In other modes than the FF/REW, CAP FG pulse is output even if CTL pulse is not recorded.

Note: If a connected RM-86E/88E is operated as this switch is set to "CTL" side, it may cause malfunction of RM-86E/88E's counter.

1.4 TBC SWTICH

Setting the TBC switch ON produces the following states.

1) In order to avoid TBC operating error, the ADD V PULSE is not applied during Search.

Note: The ADD V PULSE can also be switched ON and OFF by DIP SW2 of the PB Y board. (Set to ON when shipped from factory.) However, the pulse is not applied in Search with the TBC switch ON.

2) The DOC of the set dose not function, since that of the TBC in used.

Note: If the connected TBC does not have a DOC function (DOC IN connection absent), the DOC circuit of the BR-S610E can be activated by setting the PB Y board DIP SW1 to ON (set to OFF when shipped from factory).

3) Ordinarily, Fh changes in the Search mode due to the change in tape speed. In the BR-S610E, the drum rotation rate is changed in order to maintain a constant Fh (15.625 kHz) during Search with the TBC switch OFF. However, with the TBC switch ON, the drum rotation does not change in the Search mode, since the change of fH is compensated internally by the TBC.

TBC SW	PB	SEARCH	
	DOC	ADD V PULSE	DURM
ON	OFF*1	NOT ADDED	PHASE LOCKED
OFF	ON	ADD*2	Fh = CONSTANT

*1: Selectable with PB Y board SW1.
*2: Selectable with PB Y board SW2.

Table 1-1

• DOC SW

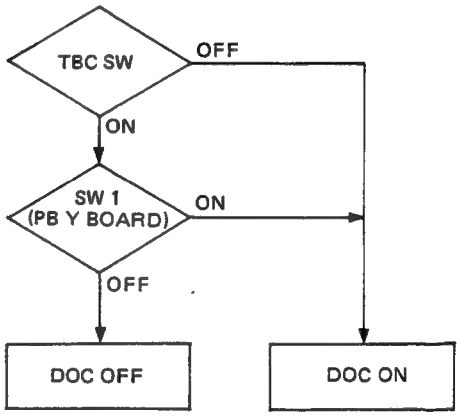

• ADD V PULSE SW

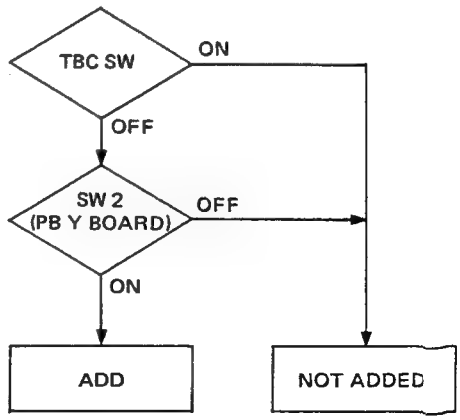

1.5 DUB TERMINAL (7-PIN) OF BR-S610E

1. DUB terminal (7-P)

Pin No.	Y/C 443		Y/C 627	
	Signal	Output Level	Signal	Output Level
1	Y signal	1 Vp-p*	Y signal	1 Vp-p**
2	GND		GND	
3	Not used		DUB D. FF	9.0 Vp-p
4	Not used		GND	
5	CHROMA (4.43 MHz)	0.3 Vp-p* (Burst Level)	CHROMA (627 kHz)	0.9 Vp-p**
6	GND		GND	
7	Not used		DUB IN CONT.	

* Output level with 75-ohm termination

** Color level with input of EBU color bars signal & 1 k-ohm termination.

2. 7-pin to 7-pin DUB cable

Cable (Parts No.)	Discrimination (Sreave Color)	Wiring	Applicable Model	Remark
Cable provided with BR-8600E (PGZ00223A)	Black	Figure①	BR-8600E	For Y/C 627
Cable provided with BR-S810E (PGZ00752-01-01)	Red	Figure②	BR-S610E BR-S810E BR-S410E	For Y/C 443 and Y/C 627
Cable provided with PR-900E (PGZ00376A-1)	Gray	Figure④	PR-900E PR-600E	For Y/C 924
VC-G10XXU (PGZ00793-00X)	Blue	Figure③	BR-S610E BR-S810E BR-S410E	For Y/C 443

Note: Make sure to use these cables exclusively for their applications, unless the characteristic of a connected set changes.
In the case different types of VTRs are used as a player and a recorder for editing, etc., make sure to connect them with the cable provided with the VTR used as a player. For instance, if BR-S610E is used as a player while BR-8600E is used as a recorder, use the accessory cable (parts No. PGZ00752-01-01) of BR-S610E.

- **Wiring inside cable**

①

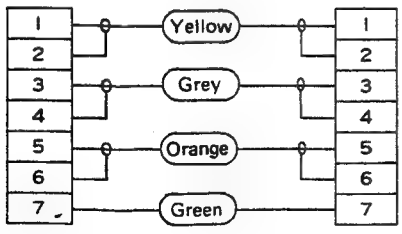

②

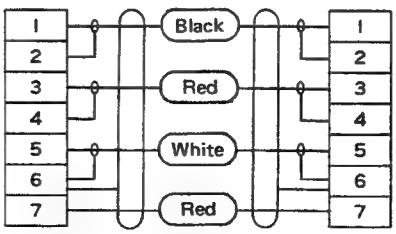

③

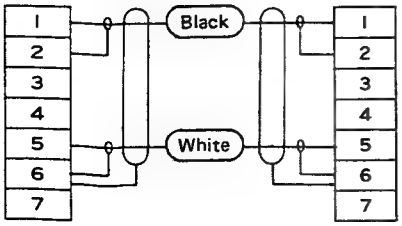

④

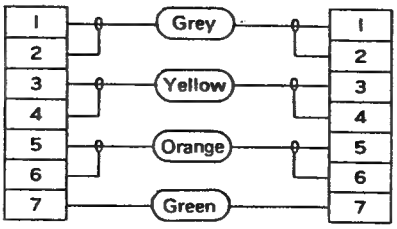

1.6 WARNINGS OF BR-S610E

1. INVALID indication

The INVALID indication is produced mainly in the following states.

(1) Recording (REC, Edit, etc.)
(2) When connected into a system

1) Recording

Attempting to record in S-VHS mode using Normal VHS tape. The INVALID LED lights.

REC MODE SELECT SWTICH / OPERATION KEY / TAPE	S-VHS
NORMAL VHS	ON

ON: Operation inhibited in INVALID mode

Table 1-2 Invalid mode

* At insert editing, simultaneously selecting Audio 1 or Audio 2 and Video/Hi-Fi Audio yields the Invalid mode and operation is inhibited.
However, during Audio 1 or Audio 2 insert editing, if the Video/Hi-Fi Audio button is pressed, only Video/Hi-Fi Audio insert is inhibited and Audio 1 or Audio 2 insert editing continues.

2) System composition

In addition, the Invalid mode will be produced when the BR-S610E is used at the Recorder side in the following situations.

In the S-VHS mode, pilot burst is added to the down converted chroma signal when recorded on tape (it is not added in the VHS mode). When the BR-S610E is used as the Recorder in a system such as indicated in the figure, it detects whether the chroma signal is S-VHS or VHS mode.

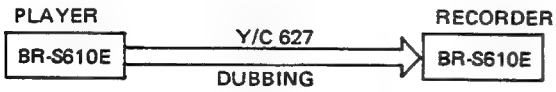

If set for VHS mode recording with an S-VHS mode signal (player at S-VHS and Recorder at VHS), or set for S-VHS mode with a VHS mode input, the Recorder BR-S610E detects Invalid mode and inhibits operation.

DUB Signal / DUB MODE		LINE or Y/C443	Y/C627
PLAYER	RECORDER		
S-VHS	S-VHS	OFF	OFF
S-VHS	VHS	OFF	ON*1)
VHS	S-VHS	OFF	ON
VHS	VHS	OFF	OFF*2)

ON: INVALID mode
OFF: Operation normally

Table 1-3 Invalid mode in editing

Notes: *1) When an S-VHS mode recorded tape is played by the Player, if the Y/C 627 OUT switch (select switch) is set to VHS, the VHS mode Y/C 627 signal (without pilot) appears at Y/C 627 OUT.
Therefore, in the case the recorder is set to the VHS mode, the player's switch (Y/C627 OUT SW) must be set to the VHS position, too.

*2) If tape S/N is poor, the Recorder may misinterpret the pilot burst signal and enter the Invalid mode.

Note:

Recording can be performed by setting the switch S3-3 of the Syscon board to ON, however, this setting enables recording between S-VHS (player) and VHS (recorder). If recording which took place in such the condition is played back, it may possibly result in disturbance in the playback picture on the monitor. It is therefore advised not to use the switch S3-3 but to perform editing in the other dubbing mode (to use "Y/C443 or LINE").

2. Warning detection position

No.	Parts Name
1	Sensor LED
2	Dew Sensor
3	Pickout Detector (to detect Half Loading)
4	Supply Photo Interrupter
5	Take-up Photo Interrupter
6	Loading/Unloading Switch
7	Intake/Eject End Switch
8	Tape Beginning Sensor
9	Tape End Sensor

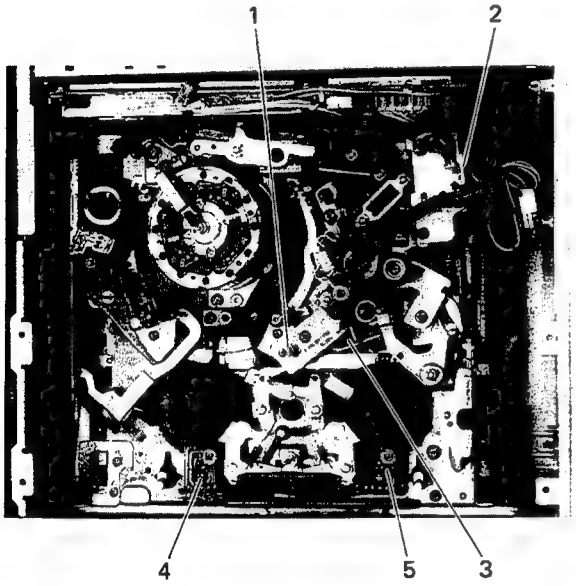

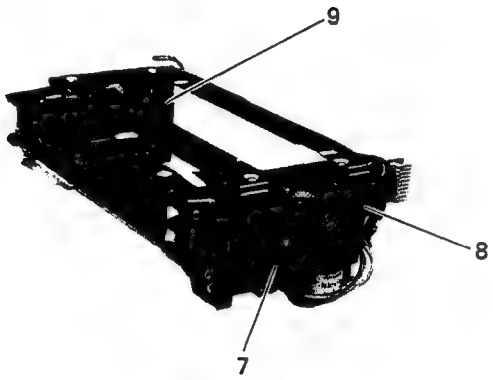

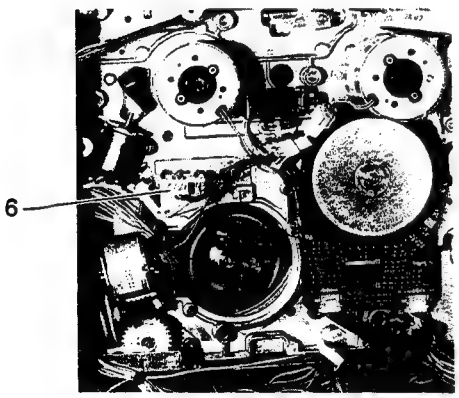

3. Warning indications

The following table shows primary means and detection parts for warning as well as conditions of the set corresponding to the warning indication. For warning conditions in detail, refer to the instruction book.

Warning Indication	Condition/Cause	Signal Level in Warning (for judgment)	Detector (Symbol No.) (see previous page)
01	Disconnection or break-down of the sensor LED (Tape beginning/Tape End)	DRIVER board CN4 Pin 2 : "L"	Sensor LED (1)
02	Condensation in the machine.	DRIVER board IC2 Pin 6 : "L"	Dew Sensor (2)
04	No power supply (16.5 V) to the reel servo system [SERVO-2 board].	DRIVER board CN9 Pin 7 : "H"	–
05	Abnormal operation of the CPU.	–	–
06	Playback a tape recorded in LP (X2) mode.	–	–
32	No turning on of the loading end switch 5 sec or more after the set enters the loading mode.	DRIVER board CN6 Pin 2 : "H"	Loading End switch (6)
33	No detection of half loading end 6 sec or more after the set enters unloading mode.	DRIVER board CN7 Pin 4 : "L"	Half Loading End detector (Pick Out detector) (3)
36	No detection of half loading end 3 sec or more after the set enters half loading mode.	DRIVER board CN7 Pin 4 : "L"	Half Loading End detector (Pick Out detector) (3)
37	No turning on of the unloading end switch 3 sec or more after the set enters half unloading mode.	DRIVER board CN6 Pin 3 : "H"	Unloading End switch (6)
39	No turning on of the unloading end switch even 5 sec elapses after '32'/'36' of warning indication.	DRIVER board CN6 Pin 3 : "H"	Unloading End switch (6)
40	No turning on of the intake end switch 4 sec or more after the set enters cassette intake mode.	DRIVER board CN5 Pin 5 : "H"	Intake End switch (7)
41	No turning on of the eject end switch 4 sec or more after the set enters eject mode.	DRIVER board CN5 Pin 4 : "H"	Eject End switch (7)
42	No turning on of the intake end switch 4 sec or more after the warning indication '41' is displayed.	DRIVER board CN5 Pin 5 : "H"	Intake End switch (7)
56	Blank detection at tape beginning or tape end.	DRIVER board CN5 Pins 8 & 9 : "H"	Tape End sensor & (9) Tape Beginning Sensor (8)
57	After half loading finishes, although the set enters Auto REW mode by blank detection at tape end, blank is still detected even approx. 3 sec after the mode change.	DRIVER board CN5 Pin 8 : "H"	Tape End sensor (9)
58	After half loading finishes, although the mode changes to Auto FF by blank detection at tape beginning, blank is still detected approx. 3 sec after the mode change.	DRIVER board CN5 Pin 9 : "H"	Tape Beginning sensor (8)
70	Drum motor rotation stops (for 2 sec approx.) and no output of drum pulse.	SYSCON board CN2 Pin 5 : No D FF	–
71	Capstan motor rotation stops (for 2 sec approx.) and no output of capstan pulse.	SYSCON board CN2 Pin 7 : No CAP FG	– –
72	Supply reel motor rotation stops (for 2 sec approx.) and no output of supply reel FG pulse.	SYSCON board CN1 Pin 33B : No SUP REEL FG	Supply Photo Interrupter (4)
73	Take-up reel motor rotation stops (for 2 sec approx.) and no output of take-up reel pulse.	SYSCON board CN1 Pin 34B : No TU REEL FG	Take-up Photo Interrupter (5)

1.7 SETTING OF SWITCHES AT SERVICING

It is suggested to use the following illustrations at servicing. For example, to take notes of current setting positions of switches to reset them sfter servicing as they were, or for other puroses for convenience.

Front Panel

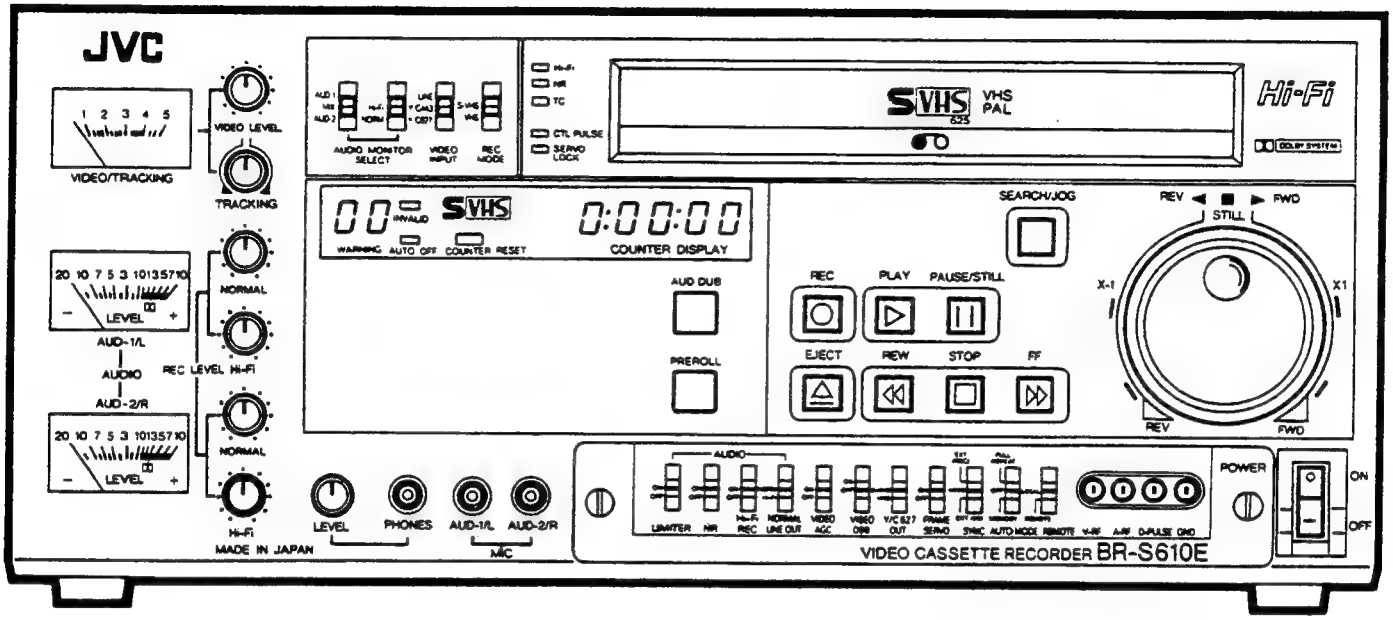

Rear Panel

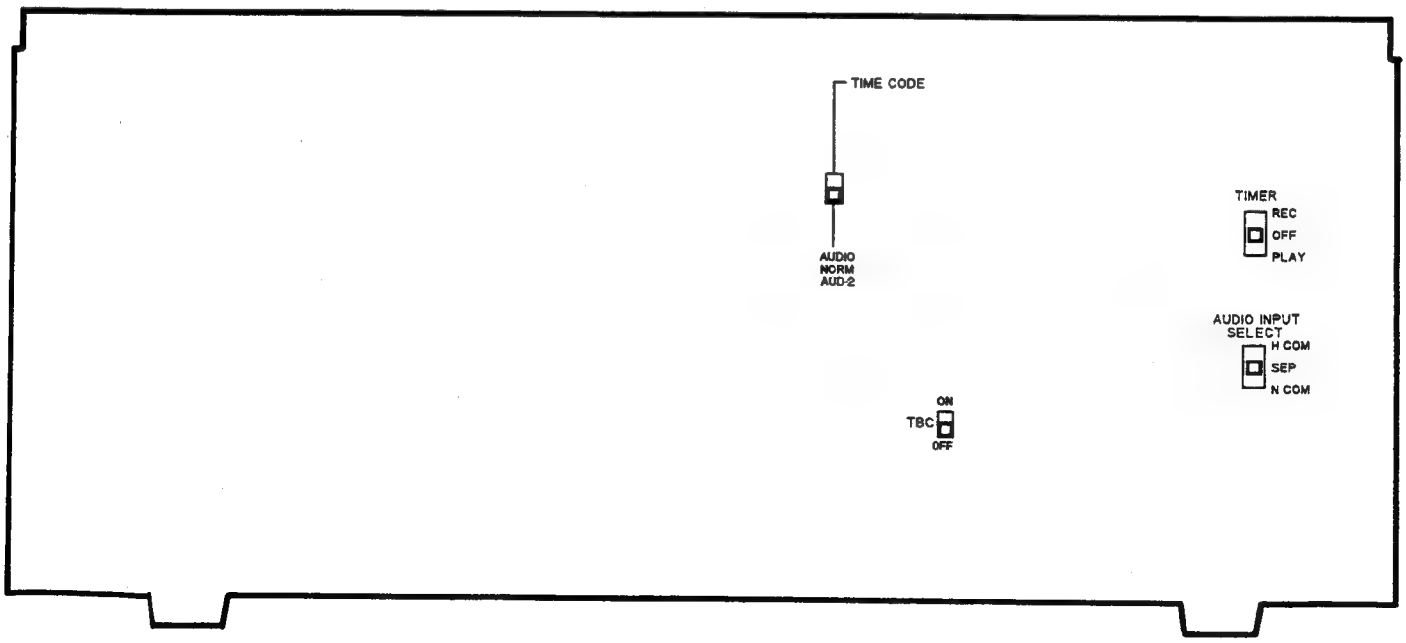

SECTION 2
MECHANICAL ADJUSTMENT

2.1 FOREWARD

Mechanism adjustments described in this section are only those considered necessary for field services, and some kind of adjustments requiring highly precise equipment and technique are excluded.
Periodical checkup and maintenance are very important to keep the machine with the original performance as well as to prevent tapes from damage.
Adjustments which require specified tools and jigs must be performed with them.

2.2 REQUIRED JIGS AND EQUIPMENT

For proper and complete adjustments the following jigs and equipment are necessary.
If adjustments are done without those jigs and tools , it takes a long-time trial and error and it ends with unsatisfactory results in accuracy and performance.
Besides the following, general-purpose tools including hexagonal wrenches (1.5 mm and 2.4 mm) are necessary.

Note: For test equipment and jigs necessary for electrical adjustments, refer to Section 3 "Electrical Adjustment".

Alignment tapes MH-2, MH-F8	Parellel check plate PUJ50204	Height gauge PUJ42147-2	Master plane fixture PUJ42146
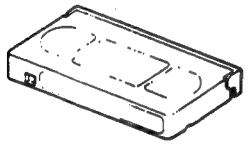		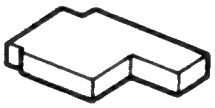	
Torque gauge PUJ48075-3	**TU guide height gauge PUJ44650**	**A/C head positioning PUJ47351-2**	
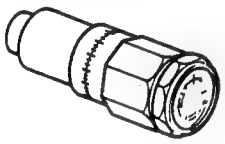			
Cassette torque meter PUJ42881, PUJ42881B	Microchecker PUJ49712-2	Gap gauge PUJ48017	
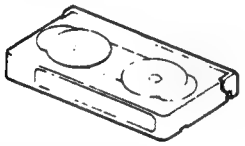	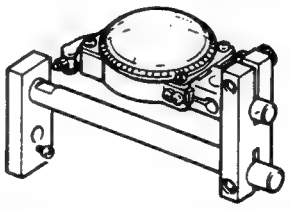	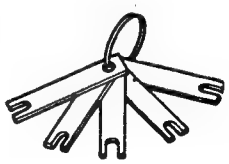	
Reel motor positioning jig PGJ04004	Slide bar adjuster PGJ04009	Tension pole positioning jig PGJ04021	VH microscope PUJ42990
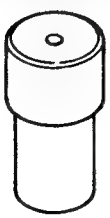	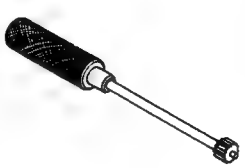	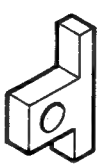	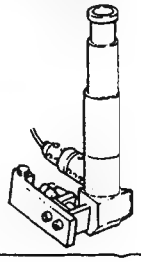

Fig. 2-1 Jigs and adjusting equipment

2.3 LOCATION OF MAIN PARTS

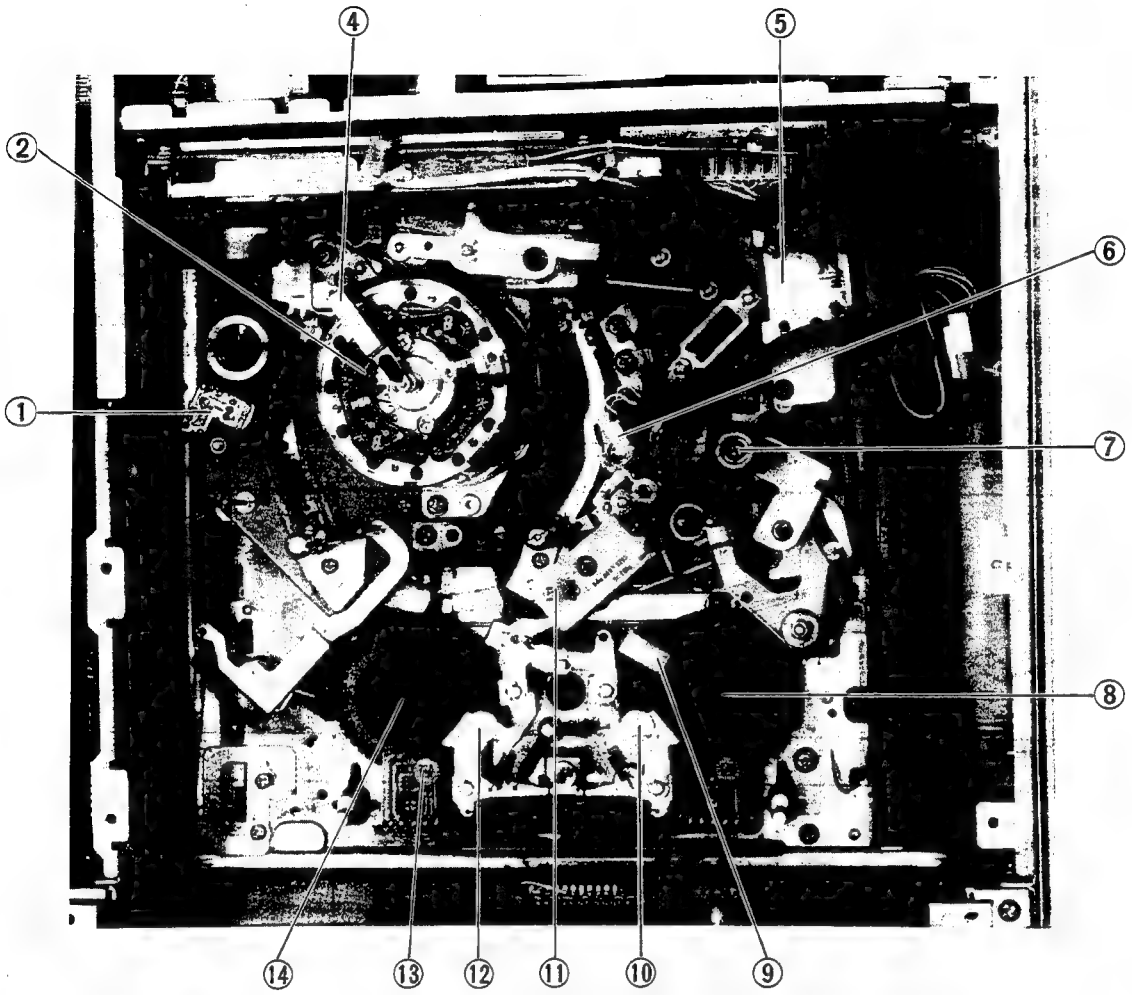

Fig. 2-2 Top view

Ref. No.	Parts No.	Parts Name	Description
1	PU54397	Full Erase Head	
2	PDM2103C-6	Upper Drum Ass'y	
3	—	—	
4	PDM4162A	Brush Ass'y	
5	PGZ00093	Pinch Roller Solenoid Ass'y	
6	PGZ00989	A/C Head Ass'y	
7	PQ40137A	Pinch Roller Ass'y	
8	PGZ00291A	TU Reel Disk Ass'y	
9	PU50547A	Back Tension Lever Ass'y	
10	PU50535B	TU Main Brake Ass'y	
11	GL-450V	LED, for Sensor	
12	PU50535A	SUP Main Brake Ass'y	
13	PU55701	SUP Photo Interrupter Ass'y	
14	PGZ00095A-1	SUP Reel Disk Ass'y	

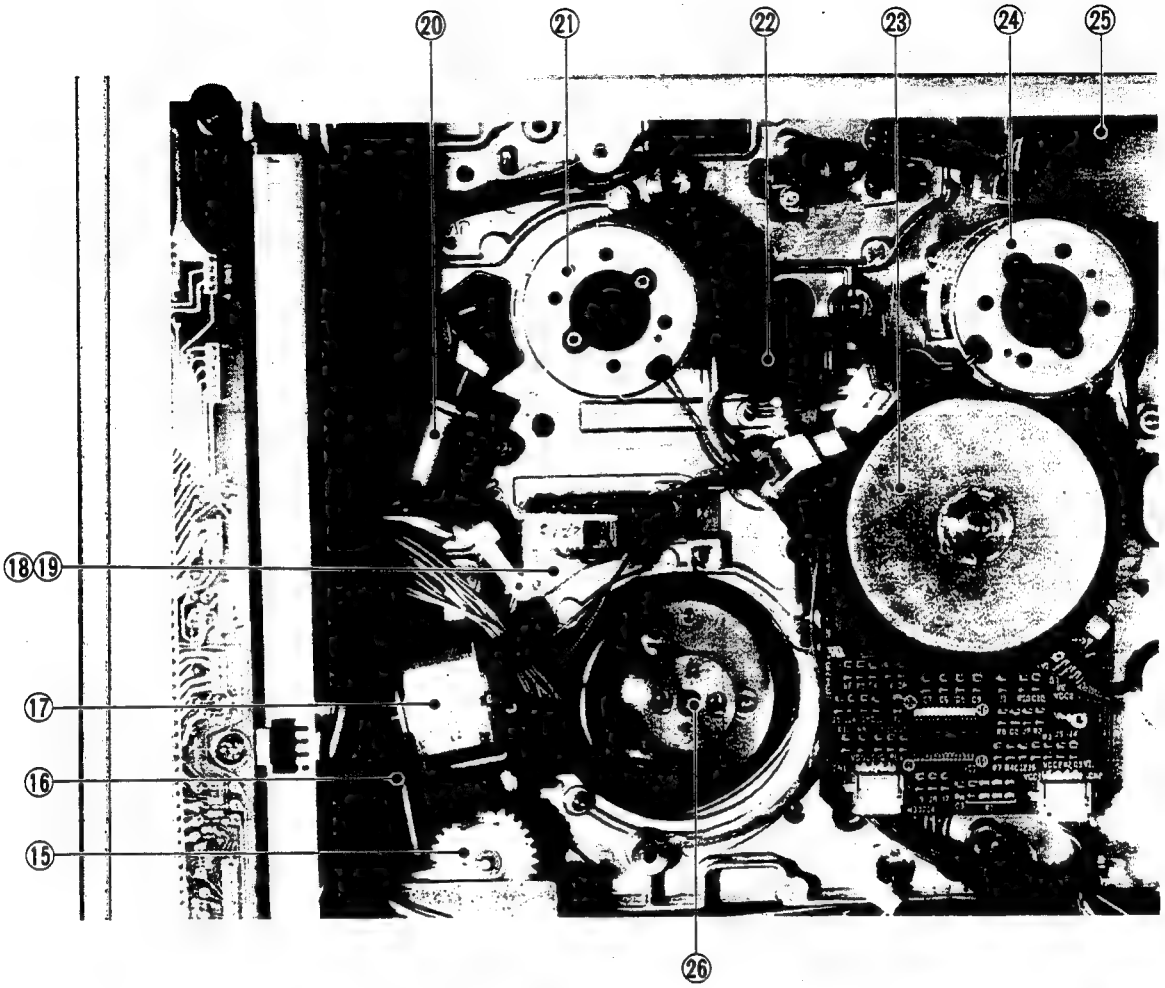

Fig. 2-3 Bottom view

Ref. No.	Parts No.	Parts Name	Description
15	PGZ00343A	Loading Drive Gear Ass'y	incl. 16, 17
16	PU50530	Loading Belt	
17	PU52745A	Loading Motor Ass'y	
18	QSM1S11-211	Loading Switch	
19	QMS1S11-211	Unloading Switch	
20	PGZ00767A	Differential Trans. Ass'y	
21	PGZ00869	SUP Reel Motor	
22	PGZ00091	Brake Tension Solenoid	
23	PGZ00735-01-02	Capstan Motor	
24	PGZ00869	TU Reel Motor	
25	PGZ00092	Brake Solenoid	
26	PDM2090B-5	Lower Drum Motor Ass'y	

2.4 SERVICING SCHEDULE FOR MAIN COMPONENTS

System	Parts Name	Parts No.	Periodic Service Schedule (Operating Hours)										Reference Section
			500	1000	1500	2000	2500	3000	3500	4000	4500	5000	
Tape Transport System	Tension pole SUP slant pole SUP guide roller SUP guide pin SUP guide pole SUP impedance roller SUP brake Capstan TU brake TU guide roller TU slant pole TU guide pole Half loading pole		★	★	★	★	★	★	★	★	★	★	
	Full erase head	PU54397	★	★	★	★	★	★	★	★	★	●	
	A/C head ass'y	PGZ00989	★	★	★	●	★	★	★	●	★	★	2.5.10
	Upper drum ass'y	PDM2103C-6	★	●	★	●	★	●	★	●	★	●	2.5.3
	Pinch roller ass'y	PQ40137A	★	★	★	●	★	★	★	●	★	★	
Drive System	SUP reel motor	PGZ00869				●				●			2.5.7
	TU reel motor	PGZ00869				●				●			2.5.8
	Capstan motor	PGZ00735-01-02								●			2.5.6
	Cassette housing motor	PQ40090A										●	2.5.1
	Loading motor	PU52745A										●	2.5.9
	Loading belt	PU50350		★		●		★		●		★	
	Lower drum motor ass'y	PDM2090B-5	★	★	★	★	★	★	★	★	○	●	2.5.4
Others	Brush ass'y	PDM4162A											2.5.3
	Head cleaner	PRD40510-01-02	○	○	○	●	○	○	○	●	○	○	

★ Cleaning ○ Check ● Replacement

Note: • The above schedule is just a reference for machines used in an average condition.
• Life time of the upper drum greatly depends on working conditions.

Table 2-3 Periodical servicing schedule

2.5 MAIN PARTS REPLACEMENT

When replacing parts, remove external covers, circuit boards, shield covers, cassette housing, etc., as required.

2.5.1 Cassette housing removal

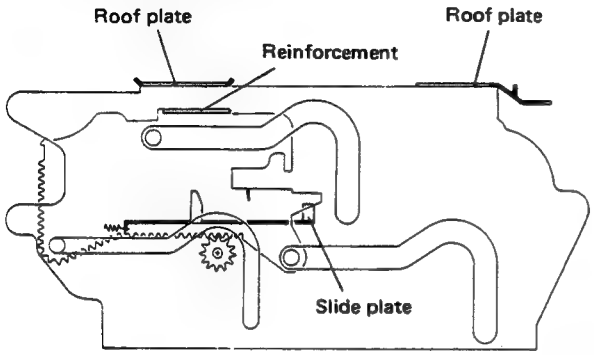

Fig. 2-4 Cassette housing

1. Cassette housing removal

1) Disconnect the connectors of the cassette housing board.
2) Remove the mounting screws of the front panel. Shift the top of the front panel forward to facilitate removing the cassette housing.
3) Take out 4 screws ①. Carefully lift the cassette housing upward to remove it.

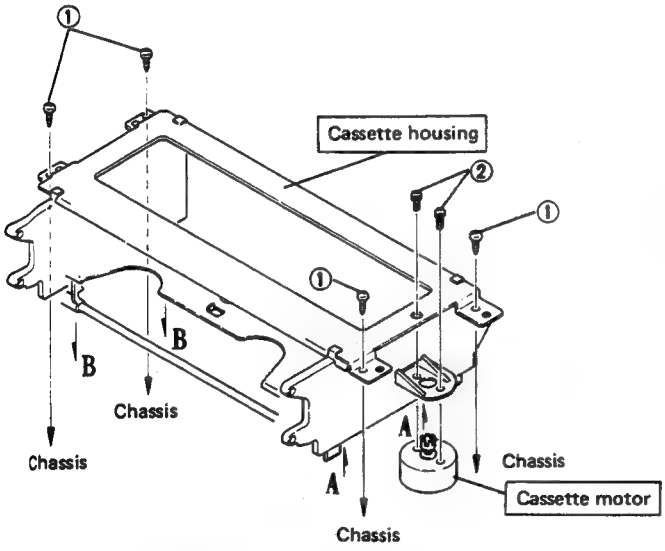

Fig. 2-5 Removing cassette housing

● Operation preset

This configuration allows operating the mechanism with the cassette housing removed. Perform as follows.

a) Place the cassette housing upside down on the rear bracket, as shown in Fig. 2-6. Engage the connectors of the cassette housing with the cassette housing board.
b) Insert cassette and perform loading.
c) After completion of loading and the sensors are enabled, use the operation switches to select the desired modes.

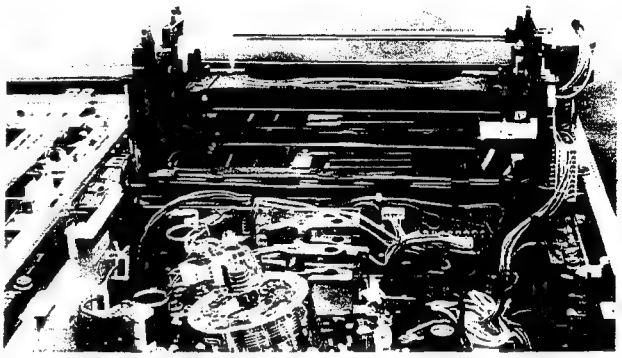

Fig. 2-6 Mechanism operation

2. Cassette motor

1) Remove the cassette housing. Quickly unsolder the wires of the cassette motor.
2) Take out 2 screws ② and replace the cassette motor (see Fig. 2-5).
3) Use care regarding motor wire polarity and reassemble by reversing the above steps.

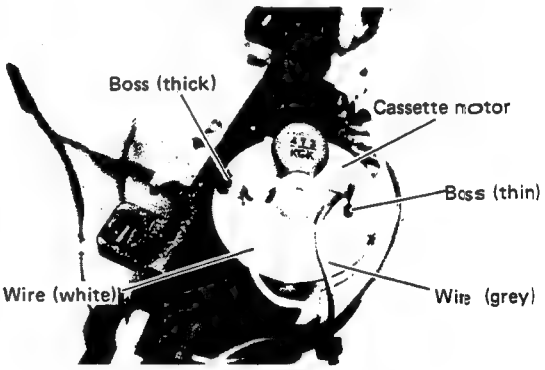

Fig. 2-7 Cassette motor wiring

2.5.2 Upper drum

1. Remove the cassette housing.
2. Take out two screws Ⓒ and remove the brush assembly.

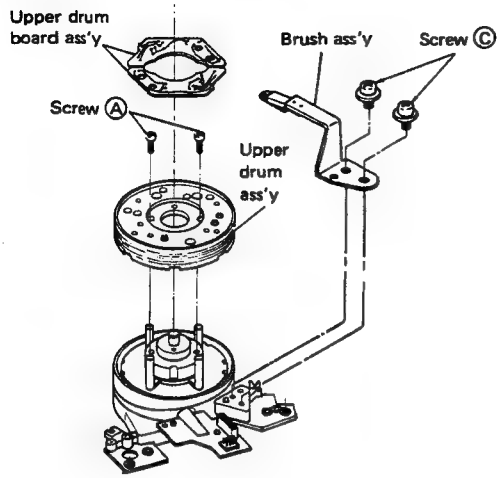

Fig. 2-8

3. Unsolder the upper drum board ass'y at the points of Ⓔ and Ⓓ (Fig. 2-9) and take out the board.
   Reference: In such a case of removing the upper drum board together with the upper drum for replacement of the lower drum, etc., unsolder at the point Ⓔ only.

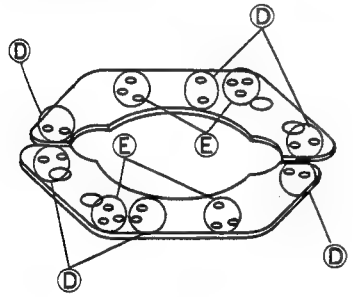

Fig. 2-9

4. Take out two screws Ⓐ and remove the upper drum in the upward direction.
5. Use alcohol to clean the lower face of a new upper drum and the upper face of the lower drum to avoid any gap between them.
6. Install a new upper drum.
   (Upper drum screw tightening torque = 4.5 to 5.0 kg-cm)

   Note: Use care of positioning the upper drum when installing it.
   As shown in Fig. 2-10, the hole "A" (2.7 mm dia.) of the upper drum and hole "B" (1.6 mm dia.) of the flywheel must be positioned squarely at the angle of 180°.

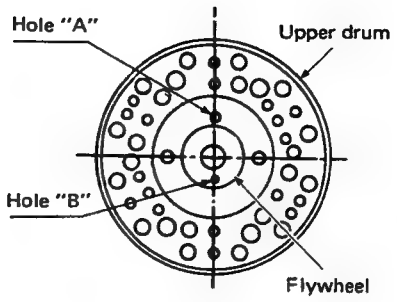

Fig. 2-10

7. Adjust the upper drum eccentricity (see Section 2.5.5).
8. Confirm the relative hight. (Section 2.8.8)
9. When installing, observe that the silk-screened indicator Ⓕ of the upper drum board is in the same direction as the 2.7 mm diameter hole of the upper drum.

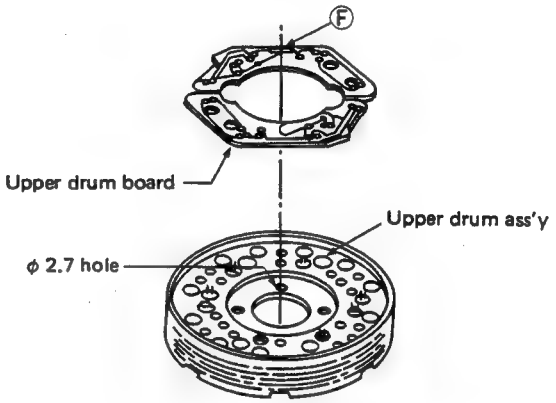

Fig. 2-11

10. Install the brush ass'y.

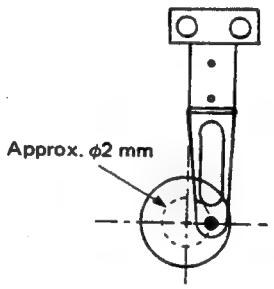

Fig. 2-12

11. Perform the following checks and adjustments.
    1) Tape transport system (Section 2.7)
    2) Switching point (Section 3.3.3, 3.3.4)
    3) Tracking preset (Section 3.3.11)
    4) Head resonance freq. & Q (Section 3.5.27)
    5) PB RF equalizer (Section 3.5.28)
    6) REC FM level (Section 3.5.30)
    7) REC frequency characteristic (Section 3.5.31)
    8) PB color channel balance & level (Section 3.5.29)
    9) REC/PB color level (Section 3.5.32, 34)

2.5.3 Lower drum

Note: The lower drum and drum motor cannot be replaced separately.

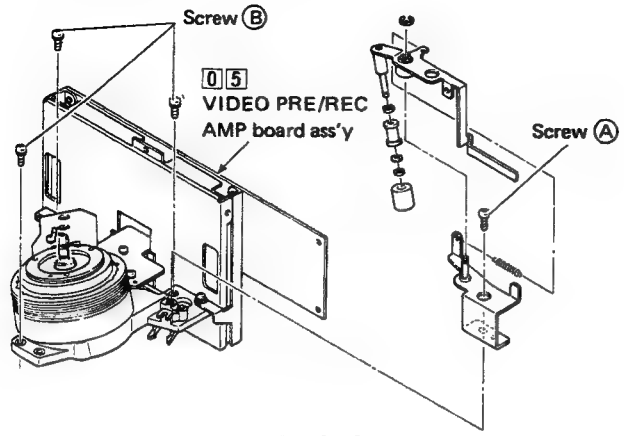

Fig. 2-13

1. Disengage the connector (15-pin) from the lower drum ass'y (from the bottom side).
2. Remove the cassette housing.
3. Take out the screws Ⓐ and remove the cleaner ass'y.
4. Remove the VIDEO PRE/REC AMP board and the upper drum ass'y (see Section 2.5.2).
5. Take out three screws Ⓑ and remove the drum ass'y in the upward direction.
6. Reassemble by reversing the above steps. Use care not to scratch the new lower drum.
7. After replacing, perform the following checks and adjustments.
   1) Upper drum eccentricity (Section 2.5.4)
   2) Tape transport system (Section 2.7)
   3) Switching point (Section 3.3.3, 3.3.4)
   4) Tracking preset (Section 3.3.11)
   5) Head resonance freq. & Q (Section 3.5.27)
   6) PB RF equalizer (Section 3.5.28)
   7) REC FM level (Section 3.5.30)
   8) REC frequency characteristic (Section 3.5.31)
   9) PB color channel balance & level (Section 3.5.29)
   10) REC/PB color level (Section 3.5.32, 34)

2.5.4 Upper drum eccentricity

Jitter and other problems may occur if the upper drum center is even slightly deviated from the drum shaft. Be sure to perform eccentricity check after replacing the upper drum.

1. Perform operation preset (Section 2.5.1) and set for the Play mode.
2. After loading, set power OFF.
3. Remove the earth plate. Set the Microchecker with the holder aligned with the guide pin and tighten the securing screw. (Fig. 2-14)
4. Slowly turn the Fine-adjusting knob of the Microchecker clockwise to set the needle the "0" scale indication. The outer rim can also adjust for ±10 scale divisions. But do not turn it more than this range.
   The Microchecker probe should contact the head drum between the 1st and 2nd groove (counting from top).
5. Slowly turn the upper drum while using care not to apply pressure to it (e.g., use a toothpick, etc.). Needle deflection within 2 microns (±1.0 microns) is required.
6. If deflection exceeds 2 microns, turn the Fine-adjusting knob counterclockwise to separate the Measuring probe from the upper drum. Loosen the 2 screws that secure the upper drum and correct the mounting position by just a small amount, then tighten the screws.
7. Again measure the eccentricity. Repeat this process until the deflection is within 2 microns.

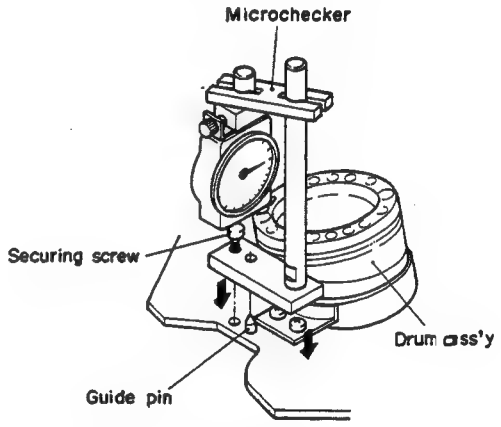

Fig. 2-14 Microchecker setting

8. After confirming eccentricity within 2 microns, turn the Fine-adjusting knob counterclockwise and remove the Microchecker.
9. Supply power and set for the Stop mode.
10. Connect an oscilloscope to the V-RF front service point.
11. Operate the TRACKING control and confirm that the CH1 and CH2 FM waveforms reach maximum simultaneously.
12. If abnormal, remove the upper drum and clean the lower face of the upper drum and the upper face of the lower drum flywheel. Then repeat above steps 1 through 11.

Microchecker handling

1. The Microchecker is a high precision instrument. Do not subject it to vibration or shock.
2. Do not apply unnecessary force to the measuring probe.
3. The meter and holder position and direction have been pre-adjusted. Do not disassemble or disturb the adjustment.
4. The meter outer rim can be turned about ±10 scale divisions. Do not turn it forcibly (more than 300 g-cm).
5. Use care that the Microchecker does not directly contact the upper drum (particularly the video heads).
6. Before setting the Microchecker, turn the calibration knob counterclockwise. Avoid contacting the upper drum when setting.
7. When setting, confirm that the measuring probe operating direction is centered on the upper drum.
8. If rubbing or grating sound occurs during measurement, the setting is incorrect. Also check for contamination of the upper drum and measuring probe.
9. Since the instrument is set while the loading arm is extended, power must not be supplied while the Microchecker is being used.

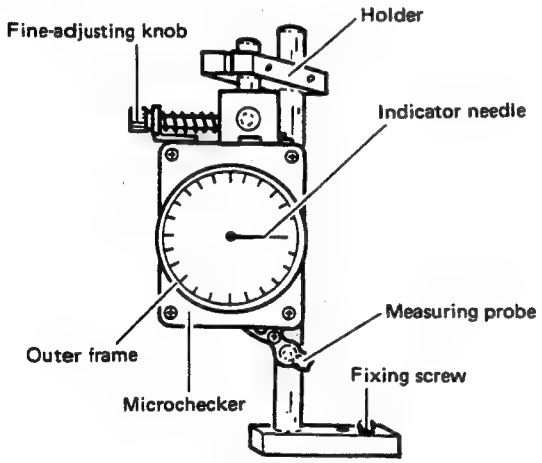

Microchecker

2.5.5 Capstan motor

Note: The capstan motor assembly includes the capstan, capstan FG and flywheel. These cannot be replaced individually.

1. Remove the cassette housing, then remove the LED holder and the pick out the detector board.
2. Remove the bottom cover and open the driver board.
3. Disconnect the capstan motor connector (rear of main deck).
4. Take out 3 screws of the main deck and remove the capstan motor assembly.
5. Install the new capstan motor assembly by reversing the above steps.

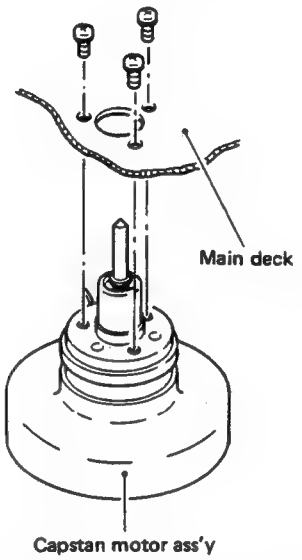

Fig. 2-15 Capstan motor assembly

2.5.6 Supply reel motor

1. Remove the cassette housing.
2. Remove a screw Ⓐ and the E-ring. Then remove the SUP reel FG board and the supply brake.
3. Loosen the lower setscrew of the supply reel disk and remove the reel disk in the upward direction.
4. Disconnect the reel motor connector (rear of main deck). Take out 4 screws Ⓑ and remove the reel motor.
5. Install the new supply reel motor by reversing the above steps.
6. Perform reel disk height adjustment (see Section 2.6.2).

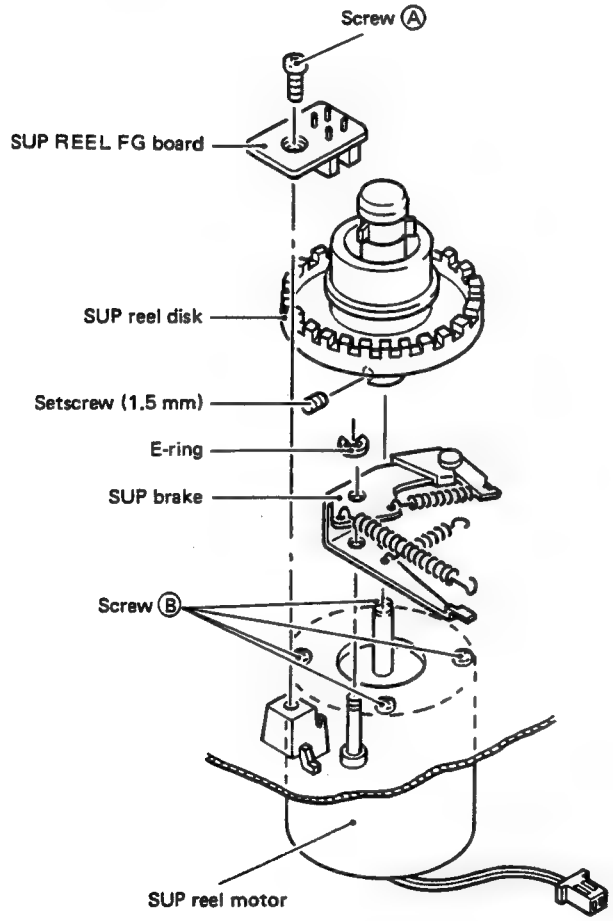

Fig. 2-16 SUP reel motor

2.5.7 Take-up reel motor

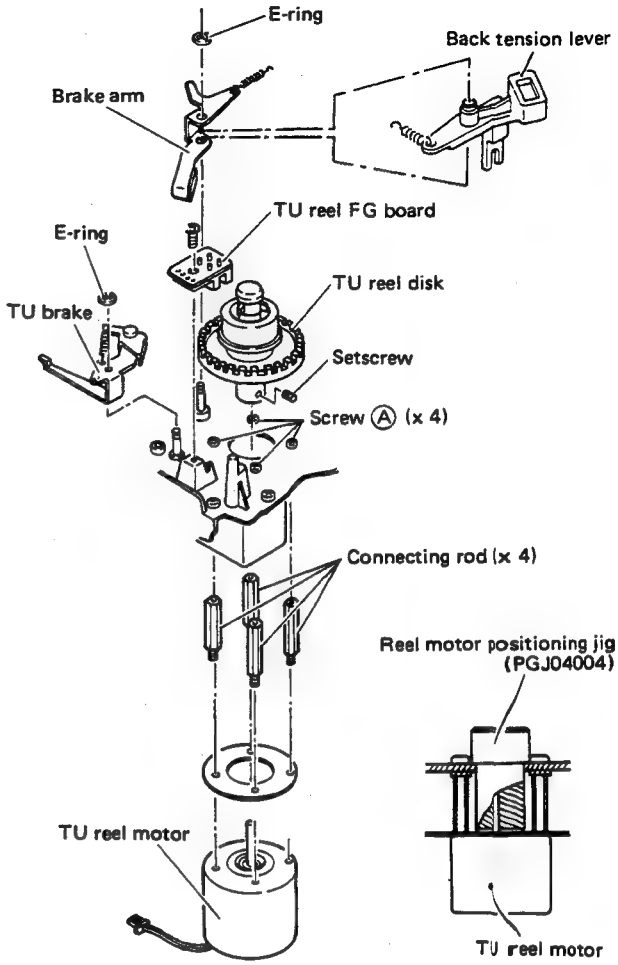

Fig. 2-17

1. Remove the cassette housing.
2. Temporarily remove the TU REEL FG board, brake arm, take-up brake and back tension lever.
3. Insert a hexagonal wrench between the take-up and supply reel motors. Loosen the setscrew of the take-up reel disk and remove the disk in the upward direction.

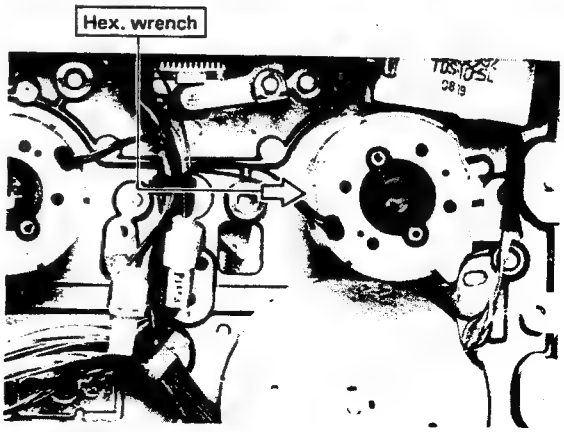

Fig. 2-18

4. Disconnect the reel motor connector.
5. Take out 4 screws Ⓐ and remove the reel motor.
6. Remove the 4 connecting rods and replace the reel motor.
7. Use the Reel Motor Positioning jig (PGJ04004) and install the new reel motor to the main deck.
8. Perform reel disk adjustment (Section 2.6.2).

2.5.8 Loading drive gear assembly and loading motor

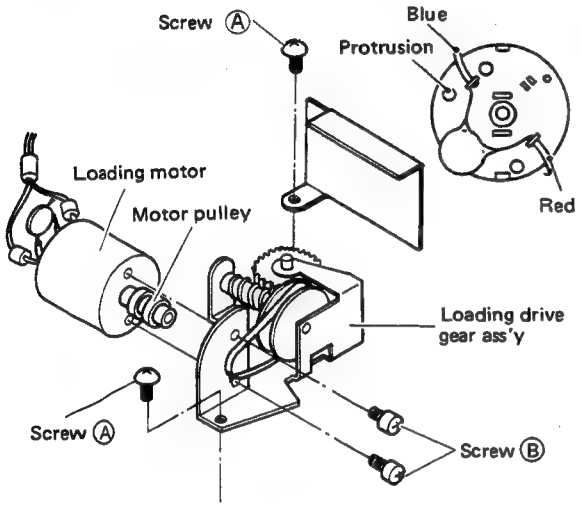

Fig. 2-19 Loading drive gear ass'y/Loading motor

Note: Before replacing the loading motor, carefully observe its mounting direction and wire polarities.

1. Take out 2 screws Ⓐ and remove the laoding drive gear assembly.
2. Remove wires from the motor.
3. If replacing the loading drive gear assembly, reassemble by reversing the above steps, then proceed to Step 7.
4. Disengage the belt from the pulley. Loosen 2 screws Ⓑ and remove the motor from the loading drive gear ass'y.
5. Observe the motor wire polarities. Then install a new motor by reversing the above steps.
6. Move the pole base of the sub-deck by hand to the loading complete position, then install the loading gear ass'y.

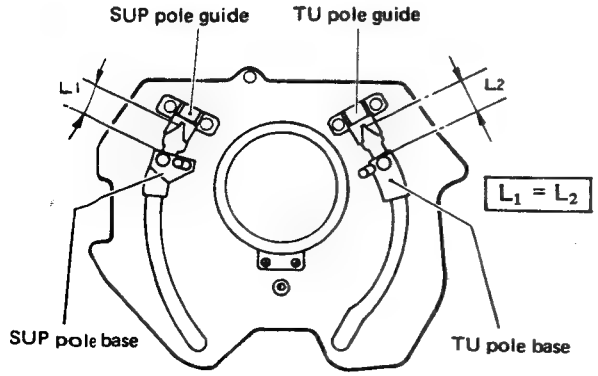

Fig. 2-20 Loading ring check (L_1 = L2)

8. Turn the motor by hand to shift the loading rings slightly in the unloading direction. Confirm that the pole bases of the supply and take-up sides are evenly spaced (Fig. 2-20).

Note: If the pole bases cannot be moved by hand, check the pole base whether it is caught by the half-loading pole or not. If so, move the TU pole base to the unloading end position once, and then move the SUP pole base first.

9. If not even, remove and reinstall the loading gear assembly.

2.5.9 Audio control (A/C) head assembly

1. Take out a screw Ⓓ and remove the shield and washer. (Make sure to wipe out screw sealant.)
2. Take out screws Ⓐ, Ⓑ and Ⓒ. Then remove the A/C head assembly. Use care not to misplace the coil springs.
3. Remove the A/C head board.
4. Replace the A/C head assembly and reassemble by reversing the above steps.

   Note: Be the most careful of setting the shield since it may possibly contact with the half-loading pole depending on the setting position.
   (For the setting, refer to Section 2.8.10.)
5. Perform the following checks and adjustments.
   1) Tape transport (Section 2.7)
   2) A/C head height (Section 2.8.4)
   3) A/C head azimuth (Section 2.8.5)
   4) A/C head position (Section 2.8.7)
   5) Interchangeability (Section 2.8)
   6) Audio system electrical adjustments (Section 3.4.1–16)
6. Adjust setting position of the A/C head's shield (see Section 2.8.10).

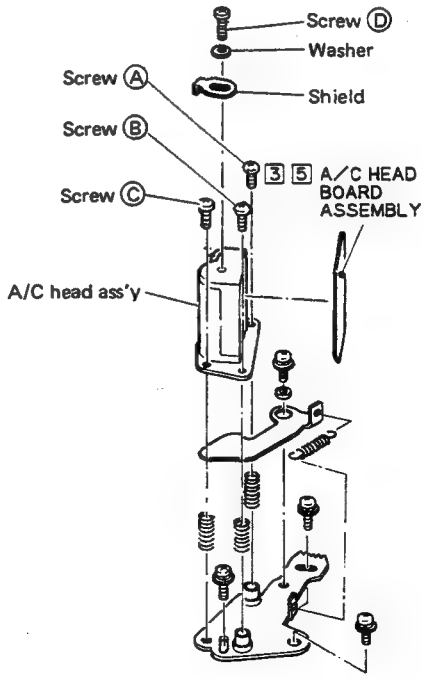

Fig. 2-21 A/C head ass'y

2.6 GENERAL ADJUSTMENTS

2.6.1 Master plane fixture (PUJ42146)

1. Remove the cassette housing.
2. As shown in Fig. 2-22, set the master plane fixture with the two shafts and stud as references.

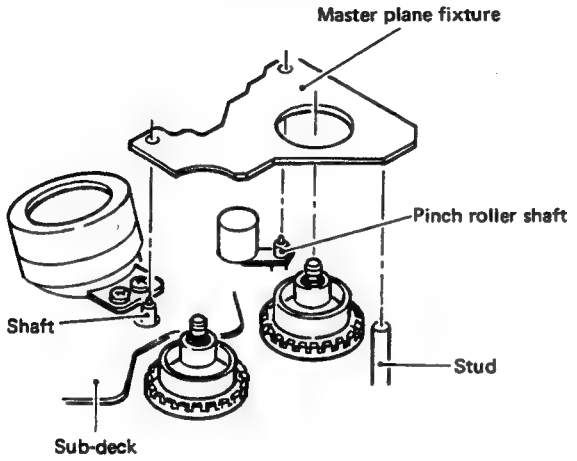

Fig. 2-22 Master plane fixture

2.6.2 Reel disk height

1. Set the master plane fixture.
2. Measure the reel disk height in two perpendicular directions. As shown in Fig. 2-23, confirm position between height gauge planes A and B.
3. If adjustment is required, loosen the setscrew and adjust the reel disk height.

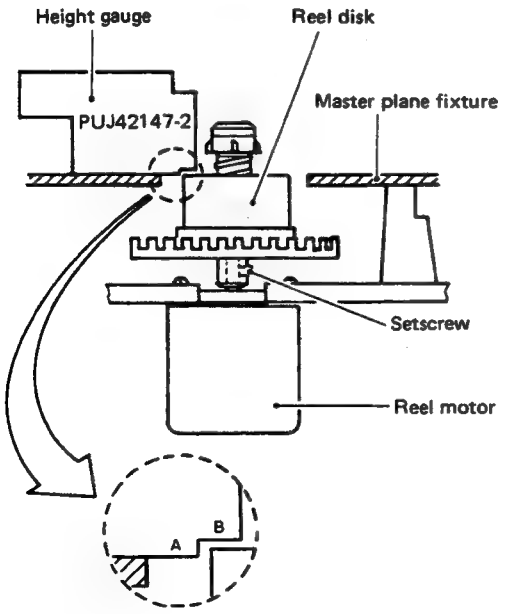

Fig. 2-23 Reel disk height

2.6.3 Supply guide pole height

1. Set the height gauge (PUJ42147-2) on the sub-deck. Check the height of the guide pole lower flange.
2. If adjustment is required, turn the nut and adjust the supply guide pole height.
3. If height is adjusted, perform tape transport system checks (Section 2.7).

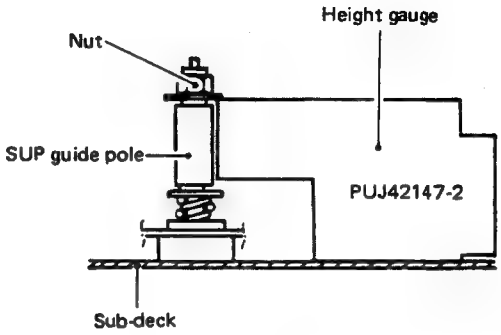

Fig. 2-24 SUP guide pole height

2.6.4 Take-up (TU) guide roller height

1. By use of the master plane fixture and take-up guide height gauge (PUJ44650), check the height of the lower flange of the TU guide roller.
2. If adjustment is required, loosen the setscrew located on the bottom of the TU guide roller and turn the screw on the top to adjust the height.
3. If height is adjusted, perform the tape transport system checks (Section 2.7).

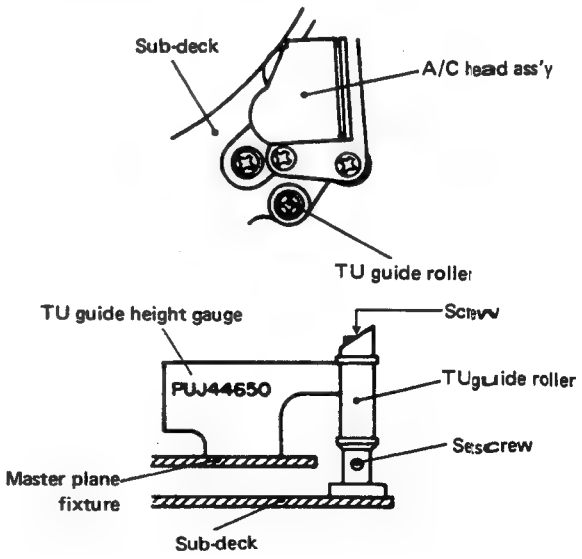

Fig. 2-25 Tape guide height

2.6.5 Take-up guide roller parallel

1. Use the flat face of the parallel check plate (PUJ50204). Set this in contact with the capstan shaft and take-up guide roller.
2. Confirm parallel accuracy of within 0.05 mm between the capstan shaft and take-up tape guide roller.

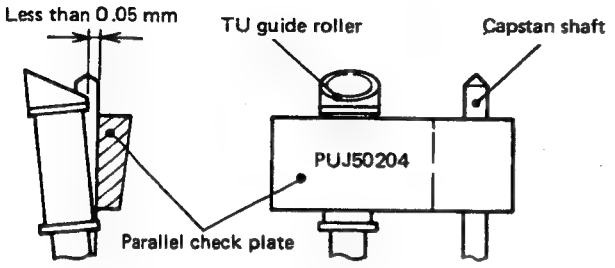

Fig. 2-26 Take-up guide roller parallel

2.6.6 Pinch roller

1. By hand, move the pinch roller pressure arm in the direction A to where the pinch roller gently contacts the capstan shaft.
2. Confirm parallel accuracy of better than 0.05 mm between the pinch roller and capstan.

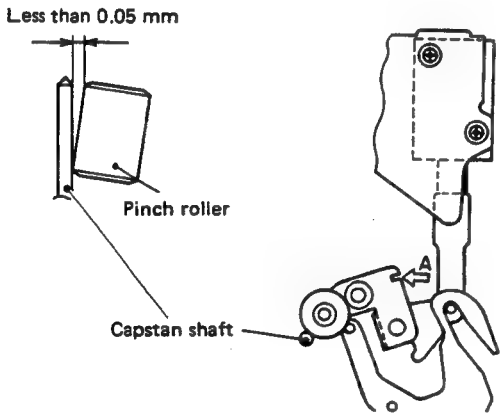

Fig. 2-27 Pinch roller

2.6.7 Differential transformer positioning

Note: The clearance is more easily checked from the bottom side.

1. Referring to section 2.5.1, use a cassette tape, supply power and set for the Play mode.
2. Turn off the power after completion of loading.
3. Confirm that the clearance between the E-ring and differential transformer is 0.1 ~ 0.5 mm when the tension arm is in contact with the base of supply guide pin.
4. If not , adjust by turning the socket bolt with a 2.4 hex key.

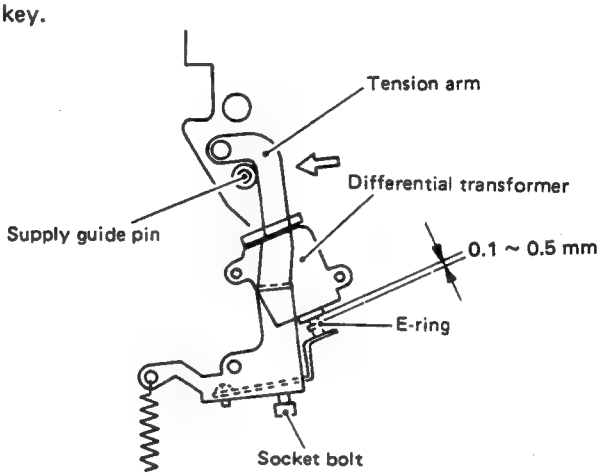

Fig. 2-28 Differential trans.

2.6.8 Pinch roller solenoid

1. Referring to section 2.5.1, insert a cassette tape, supply power and set for the Play mode.
2. Confirm that the space between the solenoid lever and spring is 0.5 ~ 1.0 mm.
3. If necessary, adjust solenoid position by loosening the two screws, then tighten the two screws again.

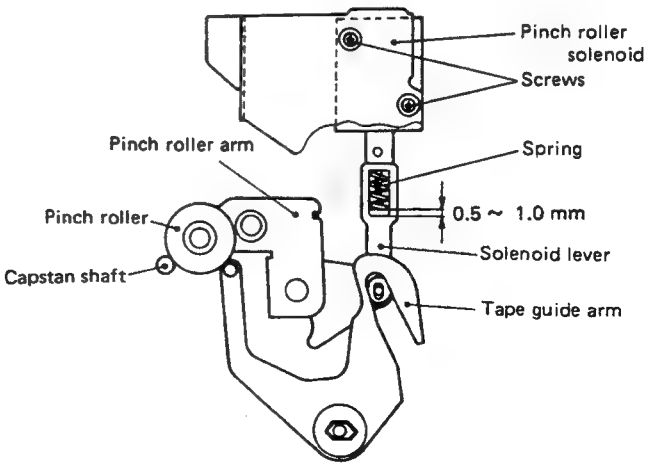

Fig. 2-29 Pinch roller solenoid

2.6.9 Tension pole perpendicularity

1. In operation preset, after the play mode is attained, set power OFF.
2. Set the height gauge on the sub-deck. Move the tension arm in the direction B to where the tension pole gently touches the height gauge.
3. Confirm that perpendicularity between the tension pole and height gauge is within 0.05 mm.

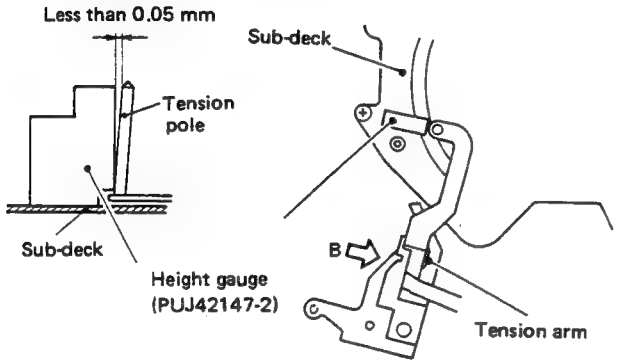

Fig. 2-30 Tension pole perpendicularity

2.6.10 A/C head parallel

1. Use the parallel check plate (PUJ50204).
2. As shown in Fig. 2-31, gently contact the A/C head with the parallel check plate. Confirm that inclination such as shown by A is within 0.1 mm.
3. Set the flat portion of the check plate against the A/C head. Confirm absence of space such as indicated by B.

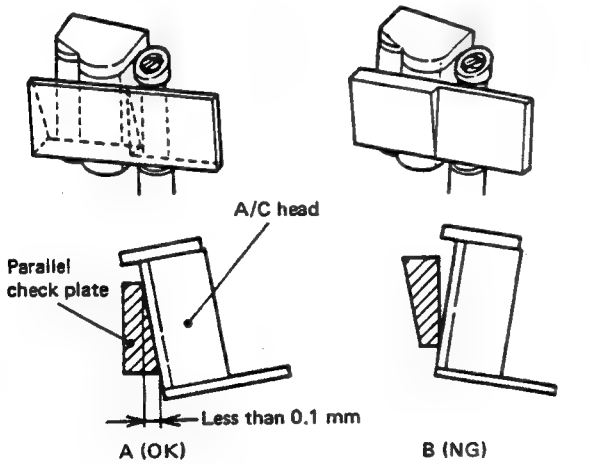

Fig. 2-31 A/C head parallel

2.6.11 Take-up guide pole height

1. Set the master plane jig. Use the height gauge (PUJ-44650) to confirm that the height of the lower face of the upper flange.
2. If necessary, adjust the height by turning the nut as shown in Fig. 2-32.
3. If the height has been adjusted, tape transport adjustments are required (see section 2.7).

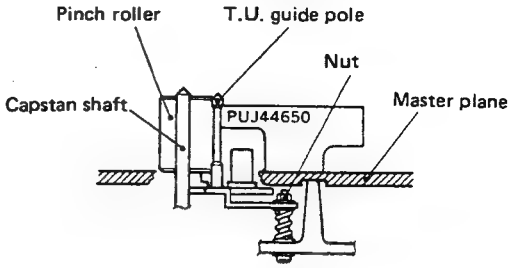

Fig. 2-32 Take-up guide pole height

2.6.12 Take-up guide pole perpendicularity

1. Set the master plane jig. Use the height gauge (PUJ-44650) to measure at the two orthogonal places (X-Y') as shown in Fig. 2-33(c).
2. To measure at the Y' place, check that the perpendicularity degree between the take-up guide pole and height gauge is less than 0.05 mm as shown in Fig. 2-33(a).
3. In the same manner, check at the X place as shown in Fig. 2-33(b).
4. Perform the following check after completing steps 2 and 3. Check that tilt of take-up guide pole is less than 0.05 mm in both X and Y directions (shaded position) as shown in Fig. 2-33(c).
5. With a recorded E-180 tape loaded, shift the mode from Search FWD (X10 mode) to Search REV (– X10 mode). During the playing, check the tape whether it is damaged or wrinkled between the TU guide pole and TU tape guide roller or not.

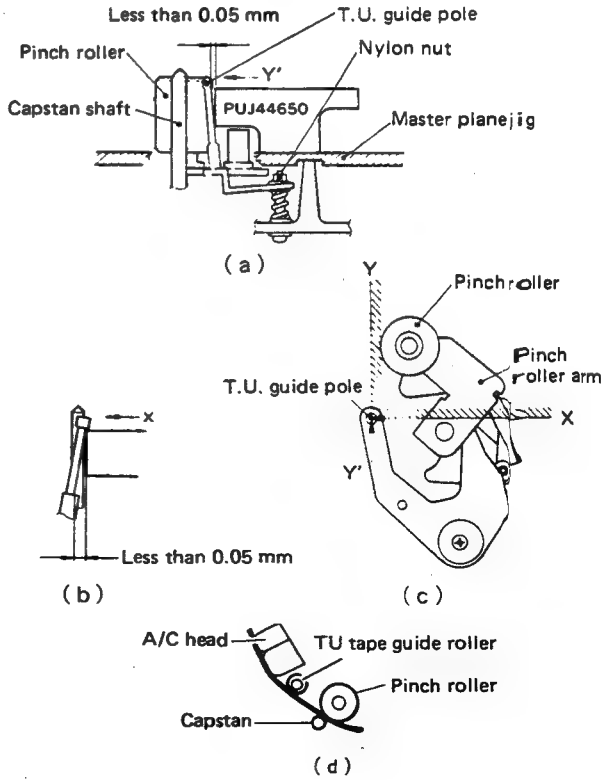

Fig. 2-33 Take-up guide pole perpendicularity

2.6.13 Reel servo circuit

Note: All check and adjustment points in the following table are located on the Servo 2 board. (Refer to page 3-7.)

No.	Item	Check Point	Adjustment Parts	Mode	Description
1	Supply DC set	TP7 TP10 : GND ↓ Digital voltmeter	R109 TP7 : 6.00 ± 0.05 V DC	STOP	1) Adjust R109 for 6.00 ± 0.05 V DC.
2	Take-up DC set	TP9 TP10 : GND ↓ Digital voltmeter	R114 TP9 : 6.00 ± 0.05 V DC	STOP	1) Adjust R114 for 6.00 ± 0.05 V DC.
3	Supply detect level set	TP2 TP11 : GND	R102 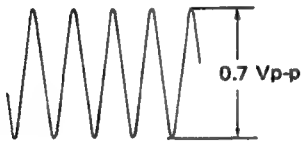	STOP	1) Adjust R102 for 0.7 Vp-p. TP2 : 0.7 Vp-p
			Setscrew	PLAY	2) Use operation preset and set for Play mode. 3) When the tension pole is positioned as shown in Fig. (a), adjust the setscrew so that output at TP2 becomes 335 mVp-p. **Note:** If the tension pole positioning jig is unavailable, position the tension pole as shown in Fig. (b) for the adjustment. 4) Perform the following checks and adjustments. Sect. 2.6.7 Differential transformer position Sect. 2.6.13 Reel servo circuit Sect. 2.7 Tape transport TP2 : 335 ± 10 mVp-p
4	Supply reel motor DC set	TP6 TP10 : GND ↓ Oscilloscope	R107 Half-loading torque: 20 mV DC	HALF LOADING	1) Set the beginning portion of E-180 tape. 2) During half-loading (while the half loading pole moves toward the A/C head), adjust R107 for 20 mV DC.
			R108 Half unloading torque: 120 mV DC	HALF UNLOADING	3) Press the EJECT button. 4) During half unloading (while the half-loading pole moves toward the cassette), adjust R108 for 120 mV DC.
			R105 Loading torque: 20 ± 5 mV DC	LOADING	5) Set the beginning portion of E-180 tape and press the PLAY button. 6) Adjust R105 for 20 ± 5 mV DC during loading.
			R104 Still tension: 10 ± 1 mV DC	STILL	7) Set for the Still mode. 8) Move the tension pole to the right end, then adjust R104 for 10 ± 1 mV DC.
			R106 Unloading torque: 120 ± 10 mV DC	UNLOADING	9) Set the beginning portion of E-180 tape. 10) During unloading, adjust R106 for 120 ± 10 mV DC.

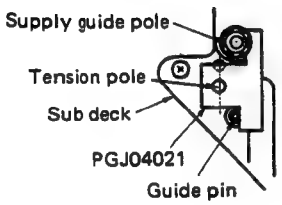

Fig. (a)

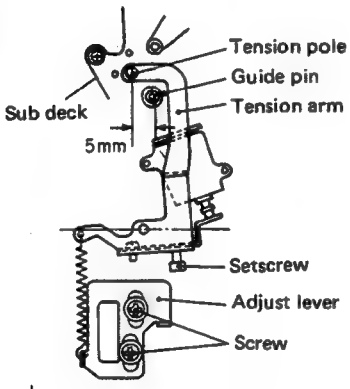

Fig. (b)

No.	Item	Check Point	Adjustment Parts	Mode	Description
5	Take-up reel motor DC set	TP8 TP10 : GND ↓ Oscilloscope	R110 Loading torque: 30 mV DC	LOADING	1) During loading, adjust R110 for 30 mV DC.
			–	UNLOADING	2) During unloading, confirm that the level is 30 ± 5 mV DC.
			Unloading torque: 30 ± 5 mV DC		
			–	HALF UNLOADING	3) During half unloading, confirm that the level is 30 ± 5 mV DC.
			Half unloading torque: 30 ± 5 mV DC		
			–	HALF LOADING	4) During half-loading, confirm that the level is 30 ± 5 mV DC.
			Half loading torque: 30 ± 5 mV DC		
6	Supply detect level	TP2 TP11 : GND 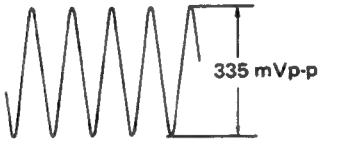 	R103	PLAY	1) Set the center portion of E-180 tape and press the PLAY button. 2) Adjust R103 for 335 mVp-p. TP2 : 335 ± 10 mVp-p
7	Loading supply back tension	Cassette torque meter (Left side)	R105 Loading supply back tension: 20 ± 4 g-cm	LOADING	1) Use the cassette torque meter PUJ42881 and set for the Play mode. 2) During loading, confirm that the left side meter reads 20 ± 4 g-cm. 3) If not, adjust R105 for 20 ± 4 g-cm.
8	Supply back tension	Cassette torque meter (Left side)	–	PLAY	1) Use the cassette torque meter PUJ42881 and set for the Play mode. 2) During the playback mode, confirm that left meter (supply side) reads 48 ± 4 g-cm and TP2 (SERVO 2) level is 335 mVp-p. (Refer to No. 3 Supply detect level set.) 3) If not, perform the following steps. 2.6.7 Differential transformer position, No. 3 Supply detect level set, No. 6 Supply detect level 4) Perform steps 1) and 2) again. When 48 ± 4 g-cm is obtained, confirm 'No. 6 Supply detect level'. 5) If not, adjust the adjustment lever position carefully, then repeat steps 4) and 5) until the specified results are obtained.
			Supply back tension: 48 ± 4 g-cm		
		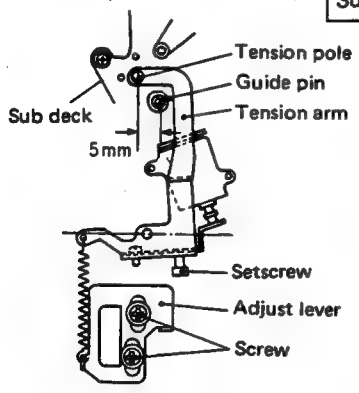 			
9	Take-up torque	Cassette torque meter (Right side)	R111 Take-up torque: 100 ± 15 g-cm	PLAY	1) Use the cassette torque meter PUJ42881 and set for the Play mode. 2) During the playback mode, adjust R111 so that the right side meter reads 100 ± 15 g-cm.
10	Take-up still tension	TP8 TP10 : GND ↓ Oscilloscope	R113 TP8 : 60 ± 10 mV DC	STILL	1) Set for the Still mode with the beginning portion of E-180 tape. 2) Adjust R113 to obtain 60 ± 10 mV DC.

No.	Item	Check Point	Adjustment Parts	Mode	Description
11	Half-loading supply tension	TP6 TP10 : GND ↓ Oscilloscope	R107 $V_{HFLD} = V_{LOAD} \pm 5$ mV DC	LOADING ↓ HALF LOADING	1) Set for the Playback mode with the beginning portion of E-180 tape. 2) During the Loading mode, measure the DC voltage (V_{LOAD}) at TP6. 3) During the Half-loading mode, adjust R107 so that the DC voltage (V_{HFLD}) at TP6 is equal to V_{LOAD}.
12	Search REV back tension	Cassette torque meter	R112 Search REV tension Take-up : 50 ± 2 g-cm Supply : 130 ± 15 g-cm	SEARCH REV (– X1)	1) Use the cassette torque meter PUJ42881B and set for the Search Reverse –X1 speed. 2) Adjust R112 so that the right side meter reads 50 ± 2 g-cm. 3) Confirm that the left side meter reads 130 ± 15 g-cm.

■ Flowchart of tape tension adjustment

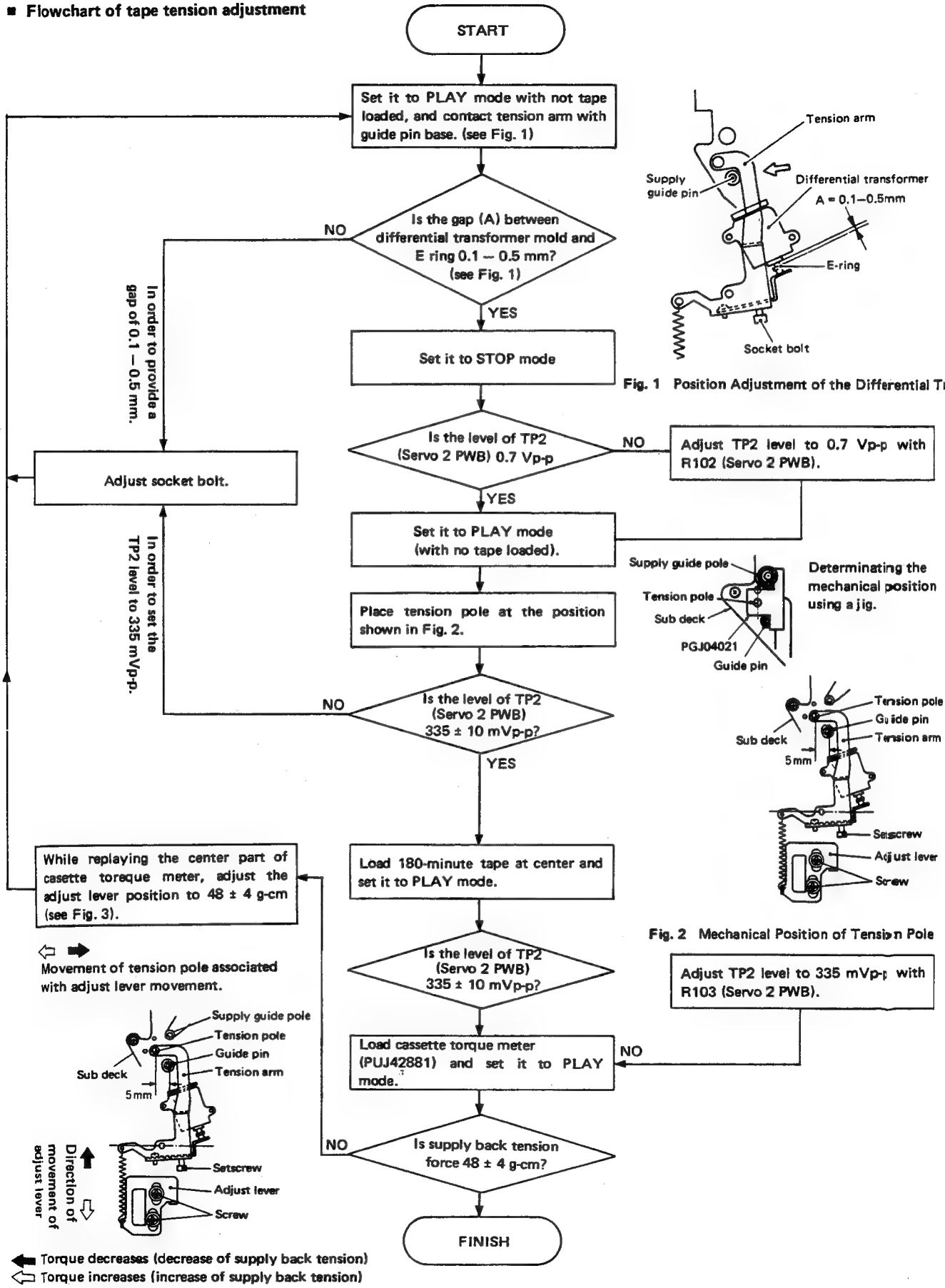

Fig. 1 Position Adjustment of the Differential Trans.

Fig. 2 Mechanical Position of Tension Pole

Fig. 3 Adjustment of the Adjust Lever

13. FF and REW torque
1) Perform operation preset. (Refer to 2.5.1.)
2) Set S2-2 of the Syscon board to "ON".
3) Set the torque gauge (PUJ48075-3) on the take-up reel disk. Use the FF mode.
4) While the torque gauge turns gradually, read the value when the needle and scale simultaneously begin to move.
5) Confirm a value greater than 300 g-cm.
6) In the same manner, confirm greater than 300 g-cm REW torque.
Note: If less than 300 g-cm, inspect the reel servo circuit (SERVO 2 board).
7) Set S2-2 (Syscon board) to "OFF".

14. Fast Forward (FF) and Rewind (REW) reel brake torque
1) Referring to section 2.5.1 "Operation preset", set a cassette tape and supply power.
2) Set S2-2 (Syscon board) to "ON".
3) Set for the REW mode.
4) Set the torque gauge on the take-up reel disk. Relex the grip on the gauge so that the disk turns slowly in the direction of the arrow B. Read the indication at the point where the indicator and scale rotate at equal speed. The correct value is 13 ± 4 g-cm.
5) In the same manner, check the FF mode. Set the gauge on the supply reel disk and let the disk turn in the direction of the arrow A. The correct value is 13 ± 4 g-cm.
6) Set S2-2 (Syscon board) to "OFF".

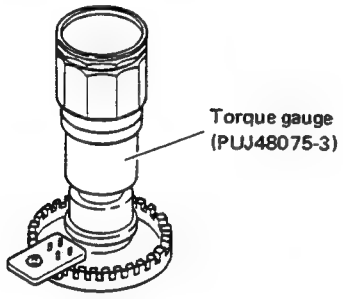

(a) FF/REW Torque

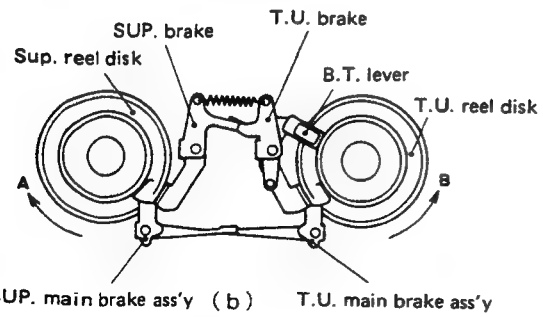

Fig. 2-34

2.7 TAPE TRANSPORT SYSTEM ADJUSTMENT

The tape transport system has been precisely adjusted at the factory and ordinarily does not require readjustment. The following checks and adjustments may be required after extensive use or after replacing parts of the tape transport system.

2.7.1 Tape transport system checks

1. Use a spare 180-minute length cassette and confirm the following points at the beginning and end portions of the tape.
2. Perform loading and unloading operations repeatedly. Observe the tape at the supply and take-up guide rollers and guide poles. Confirm absence of wrinkling or curling.
3. Set for the Playback mode and again check in the same manner.

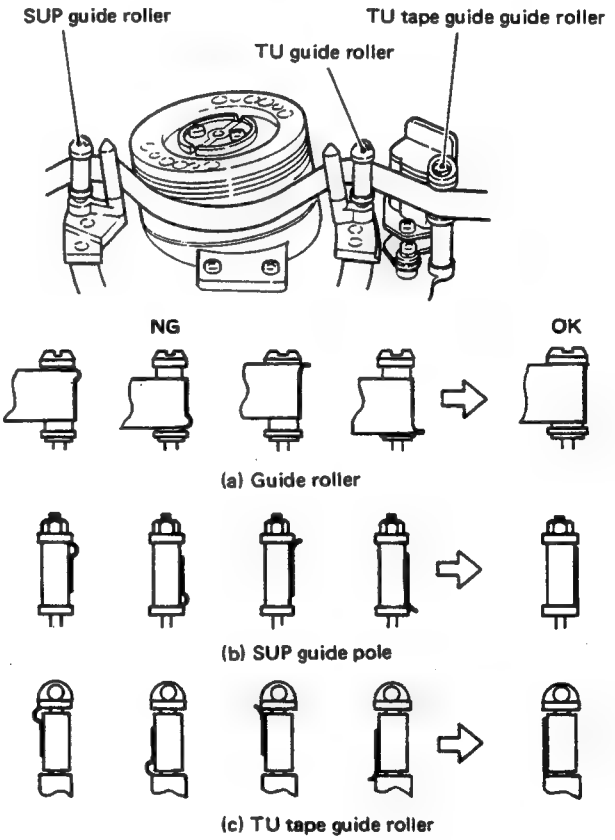

Fig. 2-35

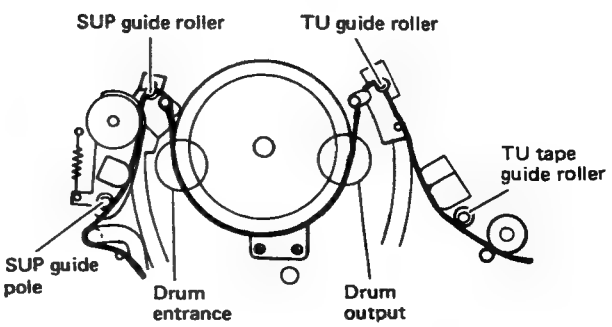

Fig. 2-36 Tape transport check

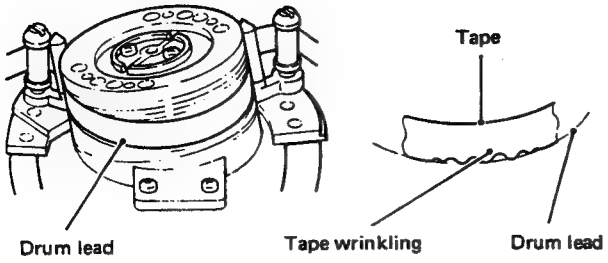

Fig. 2-37 Drum lead

Notes:

- If shift is upward, noise may be produced as the video heads strike the tape edge.
- If shift is downward, perform the adjustments of Section 2.7.2.

2.7.2 Tape transport system adjustments

Notes:

- Perform these adjustments only after confirming abnormality in the tape transport system.
- After adjusting, check interchangeability (Section 2.8).

1. Guide roller height

1) Slightly loosen the setscrew of the guide roller to be adjusted. Loosen it just enough to allow turning the guide roller with a screwdriver.
2) Use a spare tape and set for Playback.
3) Use a screwdriver to adjust the guide roller height so that the tape travels in the drum lead.
4) After adjusting, be sure to tighten the setscrew.

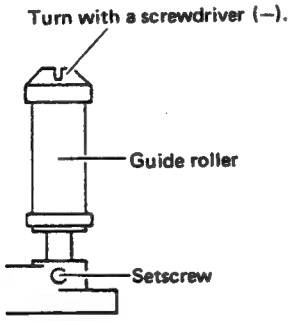

Fig. 2-38 Guide roller

2. Supply guide pole

1) Use a spare tape and set for Playback.
2) Use a nutdriver to adjust for absence of tape wrinkling or curling at the supply guide pole.

Note: Adjust in the range of ±0.5 mm with respect to the height adjusted in Section 2.6.3 (one turn of the nut = 0.5 mm). If this range is inadequate for adjusment, also check the reel disk height (Section 2.6.2) and tension pole perpendicularity (Section 2.6.9), etc.

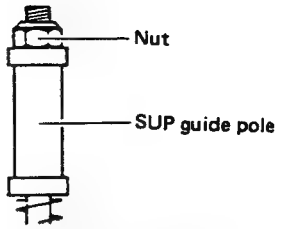

Fig. 2-39 Supply guide pole

3. Take-up tape guide roller height

1) Use a spare tape and set for Playback.
2) Slightly loosen the setscrew and the upper screw. Adjust to eliminate tape wrinkling or curling at the flange of the take-up pole.
3) After adjusting, be sure to tighten the setscrew.

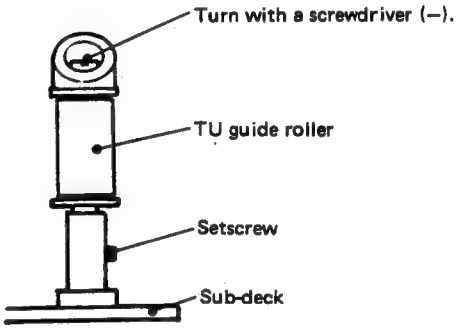

Fig. 2-40

2.8 INTERCHANGEABILITY

2.8.1 FM waveform checks

1. Connect an oscilloscope to the front V-RF test point. Trigger the oscilloscope externally with the signal from D-PULSE (or TP11 of the SERVO 1 board).
2. Play the stairstep signal of the MH-2 alignment tape.
3. Adjust the TRACKING control for maximum FM waveform.
4. Adjust the oscilloscope gain to set the maximum FM waveform level ("a" in Fig. 2-41) to 4 scale divisions. Confirm that the minimum level ("b" in the figure) is greater than 3.4 scale divisions. Read the value where the serrations are most aligned.

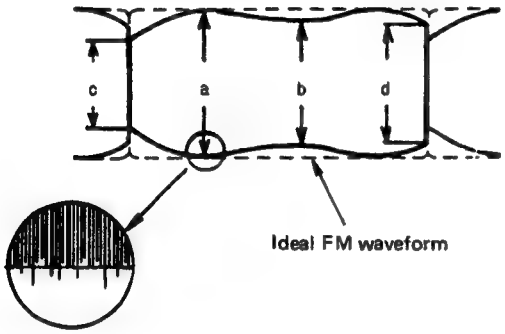

a	b	c	d
4 divisions	3.4 divisions or greater	3.2 divisions or greater	3.2 divisions or greater

Fig. 2-41 FM waveform (maximum output)

5. Read the values of the portions corresponding to the drum intake and output "c" and "d" in the figure. Confirm these are greater than 3.2 scale divisions.
6. Operate the TRACKING control to both extremes of its range. Confirm nearly linear variation of the FM waveform (see Fig. 2-42 and 2-43).
7. Adjustment is required if the conditions of Steps 4, 5 and 6 are not fulfilled.

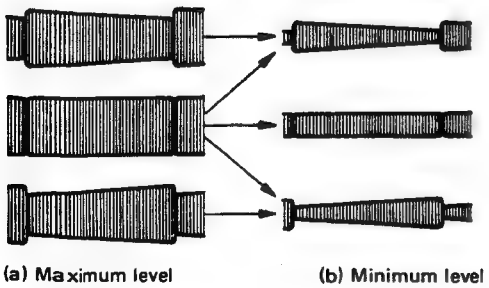

Fig. 2-42 Normal FM waveform variations

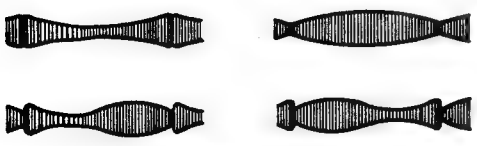

Fig. 2-43 Abnormal FM waveforms

2.8.2 FM waveform coarse adjustment

1. Connect the oscilloscope to the front V-RF test point. Trigger the oscilloscope externally with the signal from D-PULSE.
2. Play the stairstep signal of the MH-2 Alignment tape.
3. Adjust the TRACKING control for maximum FM waveform.

- **Drum intake (waveform rising edge portion)**

4. If the waveform appears as shown by A or B of Fig. 2-44, adjust the supply guide roller height to obtain a linear waveform as shown by C.
5. Confirm absence of tape wrinkling or curling at the supply guide pole. If present, again check according to Sections 2.6.3 and 2.7. (If tape deviates from the guide or if wrinkles occur, adjust the supply guide pole height so that the tape travels at the lower specification.)

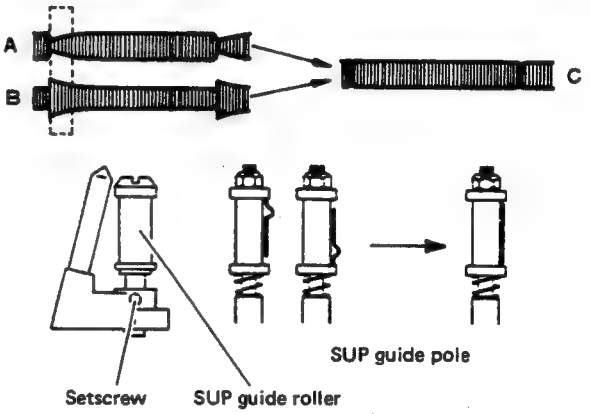

Fig. 2-44 Drum intake adjustment

- **Drum output (waveform falling edge portion)**

6. If the waveform appears as shown by D or E of Fig. 2-45, adjust the take-up guide roller height to obtain a linear waveform as shown by F.
7. Confirm absence of tape wrinkling or curling at the take-up guide roller. If present, again check according to Sections 2.6.4, 2.6.5 and 2.7.
8. Confirm that the A/C head assembly height with respect to the tape and transport is as shown in Fig. 2-46. If necessary, adjust by turning screws Ⓐ, Ⓑ and Ⓒ by equal amounts. Fig. 2-45.

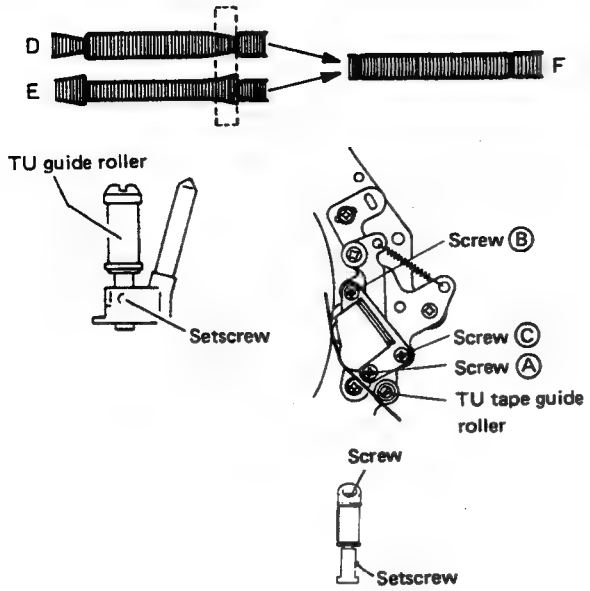

Fig. 2-45 Drum output adjustment

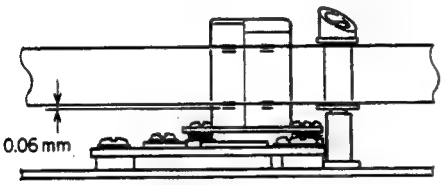

Fig. 2-46 A/C head height

2.8.3 FM waveform fine adjustment

1. After completing coarse adjustment, set the TRACKING control for minimum FM waveform at V-RF. Again use the D-PULSE for external trigger.
2. If the waveform appears as shown by A or B in Fig. 2-47, adjust the supply guide roller. If it appears as shown by C or D, adjust the take-up guide roller. Adjust carefully so that the waveform appears as shown by E, F or G. If waveform variation is large, adjust for minimum variation.

Fig. 2-47 Abnormal FM waveforms (minimum level)

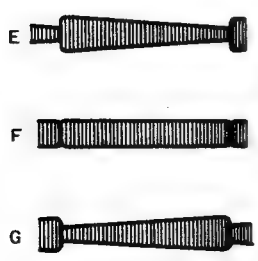

Fig. 2-48 Normal FM waveforms (minimum level)

3. Operate the TRACKING control to vary the FM waveform. Repeat the adjustments of Sections 2.8.2 and 2.8.3 to obtain linear variation.

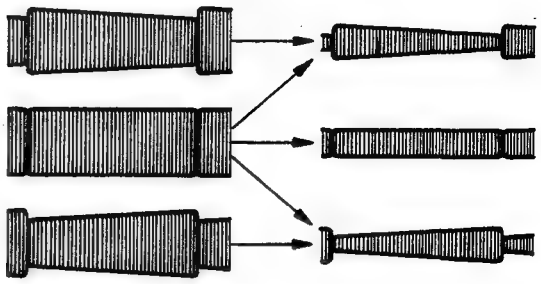

Fig. 2-49 Normal FM waveforms

4. Confirm the A/C head height, azimuth and position according to Sections 2.8.4, 2.8.5 and 2.8.6.
5. After confirming normal tape transport, set to the Stop mode and tighten the setscrews. Use care not to disturb the adjustments (especially the guide rollers).
6. Again check according to Section 2.8.1.

2.8.4 A/C head height

1. Connect a dual-trace oscilloscope to TP3 (L-ch) and TP4 (R-ch) of the Normal Audio board.
2. Play the 1 kHz signal of the MH-2 alignment tape.
3. Refer to Fig. 2-50 and gently press point Ⓧ of the tape downward. Confirm that the TP3 (L-ch) output does not increase by more than 0.5 dB.
4. Similarly, gently press point Ⓨ of the tape upward. Confirm that TP4 (R-ch) output does not increase by more than 0.5 dB.

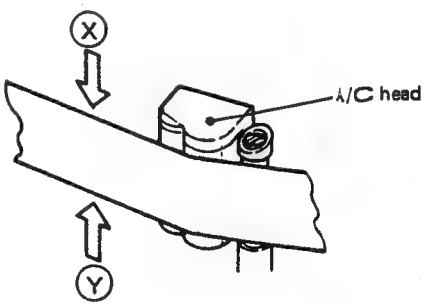

Fig. 2-50 A/C head height check

5. If increase is greater than 0.5 dB, adjust as follows.
6. When the tape is running normally, adjust screws Ⓐ, Ⓑ and Ⓒ (Fig. 2-51) by small and equal amounts in order to obtain the maximum levels.
7. If tape wrinkles or curls at the take-up tape guide roller, repeat the checks of Sections 2.6.4 and 2.7.

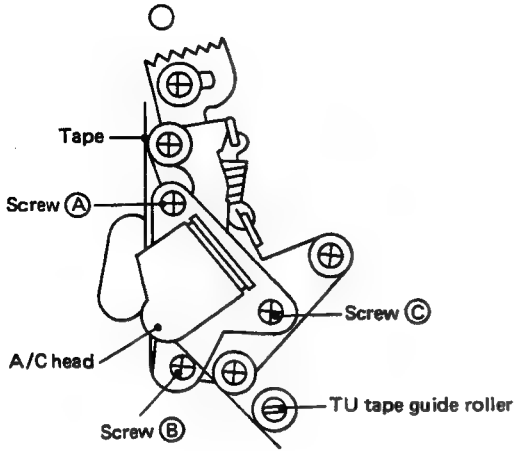

Fig. 2-51 A/C head height

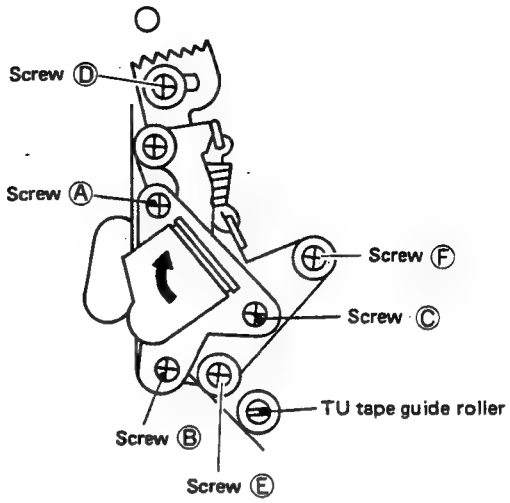

Fig. 2-53 A/C head position

2.8.5 A/C head azimuth

Perform the following after completing Section 2.8.4.

1. Connect a dual-trace oscilloscope to TP3 (L-ch) and TP4 (R-ch) of the Normal Audio board.
2. Play the 6 kHz signal of the MH-2 alignment tape.
3. Adjust screws Ⓐ and Ⓑ (Fig. 2-51) for maximum levels and to eliminate phase difference between the channels.
4. Check according to Section 2.8.4.

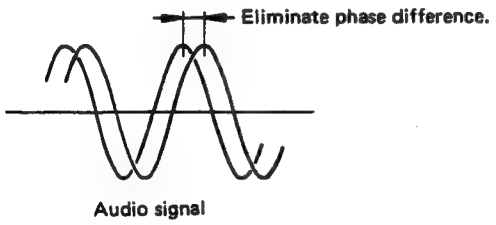

Fig. 2-52 Audio signal phase adjustment

2.8.6 A/C head position

1. Connect the oscilloscope to the front V-RF test point.
2. Play the stairstep signal of the MH-2 alignment tape.
3. Operate the TRACKING control and confirm maximum FM waveform at the center detent position.
4. If maximum is not at center, set the control to center and adjust as follows.
5. Loosen screws Ⓓ, Ⓔ and Ⓕ (Fig. 2-53) and slide the A/C head fully in the drum direction, as indicated by the arrow.
6. Tighten screws Ⓓ, Ⓔ and Ⓕ lightly and play the stair-step signal of the MH-2 alignment tape.
7. Set the slide bar adj. driver (PGJ04009) as shown in Fig. 2-54. Slowly turn the tool to where the 2nd maximum peak of the FM waveform is obtained (Fig. 2-55).
8. Tighten screws Ⓓ, Ⓔ and Ⓕ securely. Use care not to disturb the A/C head position.
9. Check according to Sections 2.8.1 to 2.8.5 and 2.6.10.

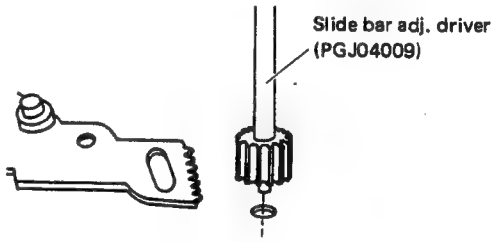

Fig. 2-54

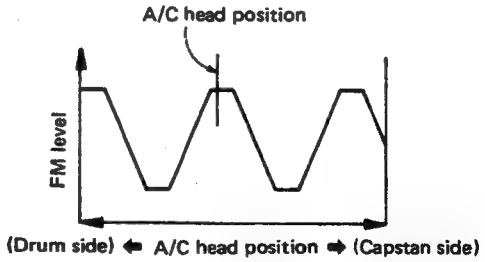

Fig. 2-55

2.8.7 Final checks

1. Reconfirm section 2.8.1.
   If incorrect FM waveform, replace the upper drum assembly (refer to section 2.5.2).
2. Connect an oscilloscope to V-RF and A-RF of the Front Panel.
   With dual trace mode, trigger the oscilloscope externally with signal from D. PULSE of the Front service terminal.

1) Play stairstep signal segment of the alignment tape MH-2.
2) Set the trigger to + slope and observe the video FM waveform (CH-2).
3) Turn the Tracking knob to obtain the maximum video FM waveform.
   At this time play carrier signal segment of the alignment tape MH-F8 and observe the audio FM waveform (b).
4) Turn the Tracking knob to obtain the maximum audio FM waveform (a).
   Observe the audio FM waveform (a) and confirm that the level difference between audio FM waveform (b) and the maximum level (a) obtained manually is:

$$\frac{b}{a} \geq 0.9$$

Maximum (Manually) (When maximizing VIDEO FM)

Fig. 2-56 Audio FM output level

5) When the maximum video FM waveform, confirm the audio FM waveform (Fig. 2-57) obtained that:

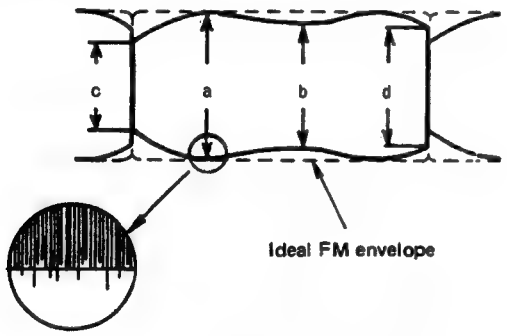

Fig. 2-57 FM waveform (max. output)

$\frac{b}{a} \geq 0.8$, $\frac{c}{a} \geq 0.64$, $\frac{d}{a} \geq 0.64$

(Specifications of audio FM waveform)

6) Without and audio signal, perform recording and then playback. Confirm the audio FM waveform (L-CH/R-CH) satisfied the specifications of audio FM waveform.
7) If FM waveform is still incorrect by the adjustments from the steps 1 through 5, replace the upper drum assembly (refer to section 2.5.2).

   Note: Refer to section 2.8.8.

3. Perform overall checks and adjustments of the servo circuit and video, and then perform the audio circuit adjustment.

2.8.8 Relative height

When audio FM waveform is not yet standardized after the final checks (section 2.8.7), a satisfactory result can be obtained by adjusting heights of the audio and video heads with a VH microscope (PUJ42990) used as an adjusting equipment.

- **Setting VH microscope**

1. Perform operation preset.
2. Use a spare tape and set for Play. At the end of loading, set power OFF.
3. Loosen the earth plate screw and remove the earth plate. Clean the upper drum.
4. Refer to Fig. 2-58(a) and set the VH microscope support onto the guide pin.
5. As indicated in Fig. 2-58(b), position the microscope on the take-up reel side. Adjust the angle so that it is perpendicular to the upper drum (Fig. 2-58(c)) and tighten the screw (use a 2.4 mm hexagonal wrench).
6. Set the retaining spring on the upper drum to prevent rotation.

Note: Use care, since dislodging of the spring may damage the tape transport or heads.

7. Light the microscope lamp and turn the guide pin knob to adjust the microscope height so as to illuminate the drum head. It may be necessary to readjust the drum securing position.

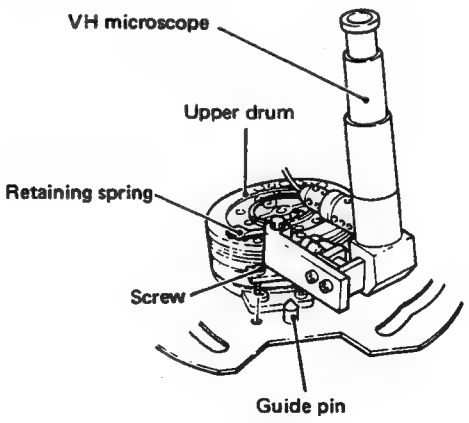

(a)

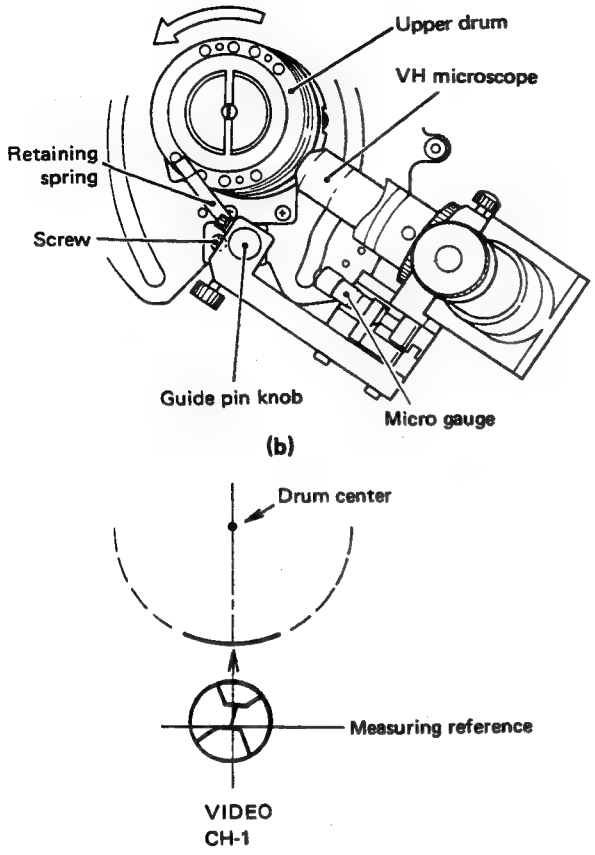

Fig. 2-58 VH microscope setting

8. While looking in the microscope, adjust the focus with the microgauge. Begin close to the upper drum and adjust the separation to obtain focus (about 5 mm separation).

Notes:

- Use care the mircoscope lens does not contact the upper drum.
- When viewed in the microscope, the forward portion is the bottom of the head. Also be aware that left and right are reversed.

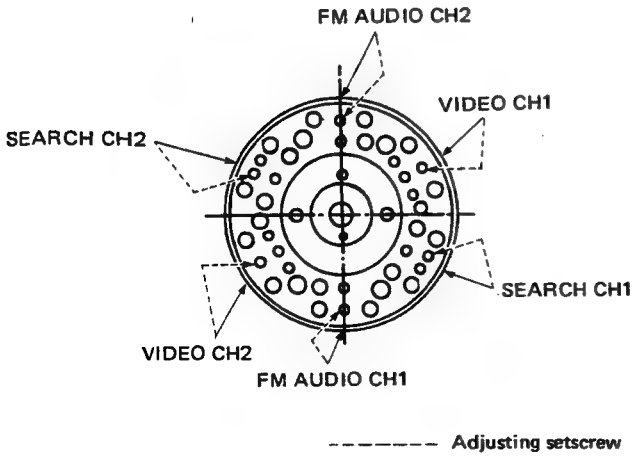

Fig. 2-59 Upper head view

- **Confirming method**

1. First read the value of the video CH1 head. This becomes the reference for the other head positions.
2. While using care not to dislodge the retaining spring, slowly turn the upper drum to video CH2.
3. Refer to Fig. 2-60. Read the difference (H) between (a) and (b). (One scale division is 2 microns.)

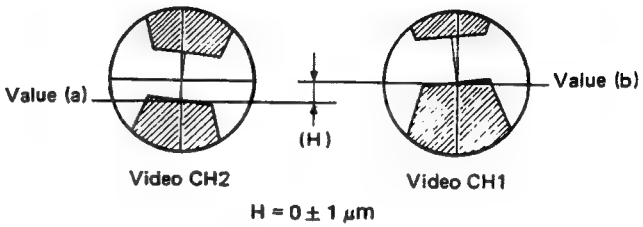

Fig. 2-60 Relative head height

4. Confirm the value of each head with respect to Fig. 2-61. If out of specification, it is necessary to adjust the relative head height.

Note: Adjustment amount is less than 15 microns. Each head can be decreased in height, but cannot be increased.

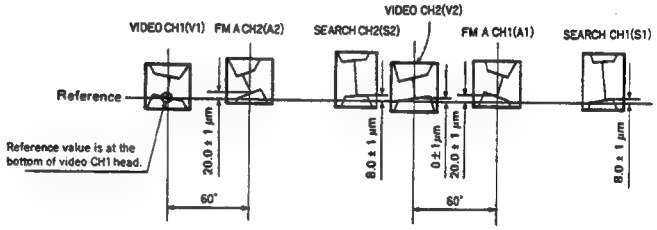

Fig. 2-61

- **Adjustment method:**

1) Check the height of all heads to detect a head whose height is the lowest to the standard value.
2) Using the head height adjusting setscrews, adjust other heads so that each of them has the correlative height to the reference height (the lowest head height) as shown in Fig. 2-61.
3) Confirm that relative height of each head to the height of the VIDEO CH1 (V1) head meets the following specifications.

Head	A1, A2	S1, S2
H (μm)	20.0 ± 1 μm	8.0 ± 1 μm

4) Perform overall checks of the servo and video systems. Then check the audio system.

2.8.9 Adjustment of half-loading pole position

1. Set a E-180 cassette tape recorded CTL pulse.
2. Connect the oscilloscope's probe to TP3 of the SERVO-1 SUB board.
3. Slightly loosen the screw Ⓐ and set the A/C head positioning jig above the screw Ⓐ for adjusting. (Fig. 2-62)
4. Adjust position of the half-loading pole to obtain more than 6 Vp-p as output level at TP3 (CTL) in FF or REW mode.
5. Confirm that the half-loading pole and the A/C head do not contact with each other and nothing disturbs tape transport (in FF and REW).
6. Tighten the screw Ⓐ and again confirm the adjustment of Section 2.8.6 'A/C head position'.

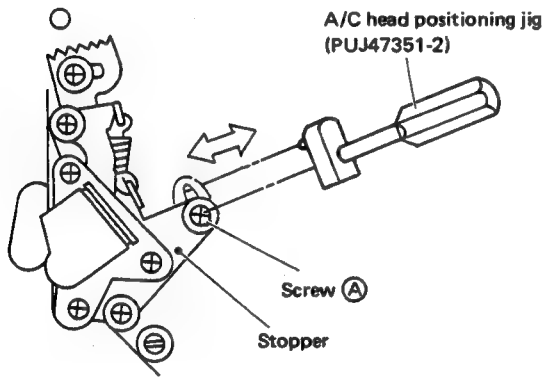

Fig. 2-62

2.8.10 Adjustment of A/C head shield setting position

1. Insert tape and set for the Stop mode (halfloading mode).
2. Tighten the screw in the condition that the gap between the half-loading pole and the shield is 1 mm approx. (Finally, apply screw sealant to the screw.)
3. By repeating half-loading operation a few times, check that the half-loading pole and the shield do not contact with each other during the operation.
4. Confirm that specifications of Section 2.8.4 'A/C head height' and Section 2.8.5 'A/C head azimuth' are all satisfactory.

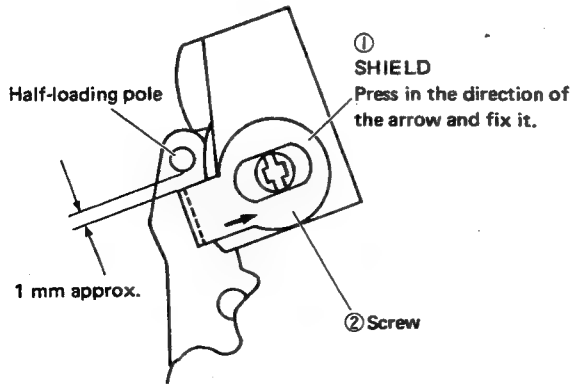

Fig. 2-63

2.8.11 Adjustment of adjuster setting position

The "Adjuster" regulates position of the tape guide arm in the Half-Unloading mode. If the tape guide arm comes off the normal position, it causes incomplete tape intake (Warning '40') resulting from contact between the tape and the lower flange of the tape guide arm as well as catching the tape by the upper flange of the tape guide arm in the Eject and Intake operation. The 'Adjuster' needs not adjustment in usual, however, if it was once removed, perform checkup and adjustment of it as follows.

- **Checkup and adjustment method**

1) Load the deck with a cassette tape (E-180) having no lid.
2) Confirm that there is a certain space left between the cassette case and the lower flange of the tape guide arm if the cassette is jolted to the limit of the play.
3) If there is no gap left between the two, perform the following adjustment.
4) Turn off the power first, and then take off the cassette housing. (Refer to 2.5.1.)
5) Push the cassette tape towward the front panel and adjust the gap Ⓐ to be maximum (see Fig. 2-64).
6) Again, precisely adjust the adjuster's angle with a pair of pliers, sec. and the gap gauge so that the gap Ⓐ is 0.3 mm wide.
7) Repeating the Intake - Eject operations a few times, confirm that the upper flange of the tape guide arm does not catch the tape in the Eject mode. (At the same time, also confirm that the tape is not slackening.) If the tape is caught by the upper flange, repeat the adjustment.

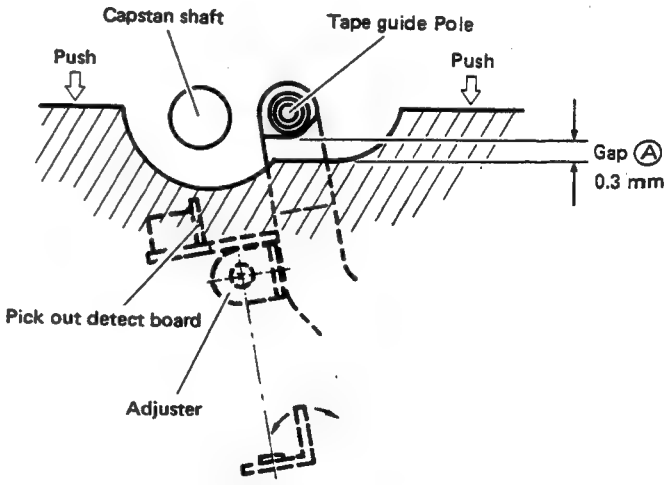

Fig. 2-64

SECTION 3
ELECTRICAL ADJUSTMENTS

3.1 PRECAUTIONS

- Prior to commencing electrical adjustment, it is required to confirm that the objective part or item for adjustment is out of order or does not work as specified as well as to confirm necessity of mechanical adjustment which is closely related to the electrical adjustment and must be completed beforehand.
- All electrical adjustment must be commenced 5 minutes after the power on.

3.1.1 Required test equipment

Extension boards				
1. PGJ05016 for SYSCON/SERVO 1 boards	2. PGJ05004 for N. AUDIO/ FM AUDIO, PB Y/PB C boards	3. PGJ05005 for REC Y, Y/C SEP boards	4. PGJ05006 for RF 2H DELAY, C.F. SERVO, SERVO 2 boards	5. PGJ05007-2 for VIDEO PRE AMP board
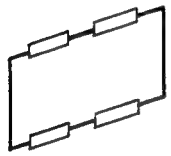	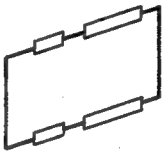	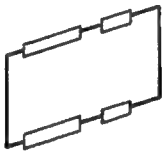	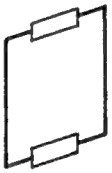	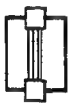

Carrier checker	Alignment tapes	DUB OUT cable
PGJ05008-2	MH-2, MH-8, MH-F8, MH-2H	PGJ05018
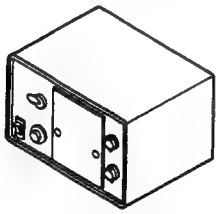	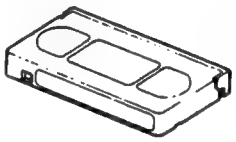	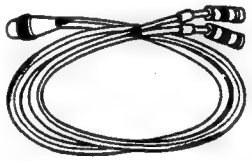 7 pins - BNC x 2

- **The following instruments are required in addition to the above equipment**
- Frequency counter (over 10 MHz, less than 100 mV in sensitivity)
- Video signal generator (1411, Model 410P-JVC or equivalent)
- Waveform monitor (1485R or equivalent)
- Digital voltmeter (capable of 1 mV DC indication)
- Signal generator

  [Model 410P-JVC : LEADER ELECTRONICS Corp.
  TELEX : J47780
  TELE FAX : 81-45-544-1280]
- RF signal generator (100 kHz – 10 MHz)
- Sweep generator (100 kHz – 10 MHz)
- Oscilloscope (dual-trace, for 100 MHz or more)
- Video monitor
- Vectorscope (521A or equivalent)
- Audio tester

3.1.2 Explanation about columns

1. "Check point"

Check point
TP3 [0][1] ↓ Digital voltmeter

The column of "Check point" indicates measuring instrument to be used and point(s) to which the measuring instrument should be connected. (Oscilloscope is omitted if it is used for other measurement than that of the audio system.)
An example on the left indicates to use a digital voltmeter and to connect it to TP3 on [0][1] REC Y board.

In some cases full or abbreviated name of terminal on the rear panel is indicated. For example:

a) Hi-Fi OUT means Hi-Fi AUDIO OUT terminal.
b) N. AUDIO OUT = NORM Hi-Fi AUDIO OUT terminal

Note: When this terminal is specified as check point, confirm that the NORMAL LINE OUT switch inside the switch cover is set to "NORMAL" position.

2. "Signal"

Signal
1 kHz/—6 dBs ↓ N. AUDIO IN

In this column signal to input and terminal to supply the input signal are indicated. (If no terminal is specified, input through the LINE IN terminal.)
An example on the left means to supply 1 kHz/—6 dBs signal to the NORMAL AUDIO IN terminal.

Abbreviations in this column are:

a) N. AUDIO IN = NORMAL AUDIO terminal
b) Hi-Fi IN = Hi-Fi AUDIO IN terminal

Note: When an alignment tape is played back to supply input signal, number of the tape and segment to be played back are specified in parentheses.

3. "Mode"

Mode
S-VHS REC ↓ PB

This column specifies the mode to be set for adjustment.
For this model, one of two modes of "S-VHS" and "VHS" is indicated unless it is unnecessary to select one of them.
When such a mode is specified, use VHS tape for "VHS" mode while S-VHS tape for "S-VHS" mode and at the same time set the REC MODE switch on the front panel to the proper position.

4. Location of main boards

In this section, boards which have check points, adjustment parts, DIP switches are indicated by board numbers such as [0][1].
The following figure shows location of only the boards necessary for adjustments described in this section.

Board No.	Board Name
[0][1]	REC Y board
[0][2]	PB Y board
[0][3]	PB COLOR board
[0][4]	Y/C SEP board
[0][5]	VIDEO PRE/REC AMP board
[0][7]	FM AUDIO board
[0][8]	NORMAL AUDIO board
[0][9]	V. ERASE/FM PREAMP board
[1][0]	SERVO 1 board
[1][1]	SERVO 2 board
[1][2]	SYSCON board
[1][7]	REGULATOR board
[3][7]	RF 2H DELAY board
[4][0]	SERVO 1 SUB board
[6][3]	CROSS TALK CANCEL board
[6][5]	Y 2H DELAY board
[6][6]	REC COLOR board
[6][7]	FM REC/PB board

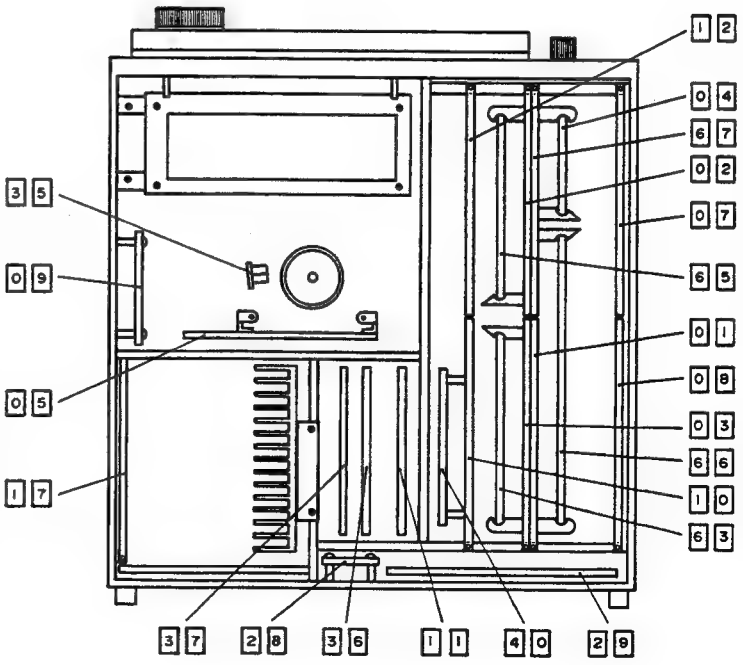

3.1.3 Video signal generator of Y/C443 / Y/C627 signal

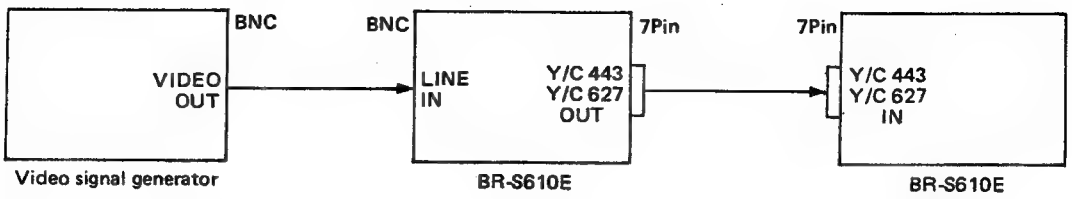

For generating Y/C443, Y/C627 signal, prepare another set of BR-S610E to use together with a video signal generator.

Prior to the connection, confirm that the signal generating BR-S610E has been correctly adjusted in the following items of Section 3.5 'Video System Adjustment'.

1) Item No. 49 DUB OUT level
2) " 67 Y/C 627 output color level
3) " 70 Y/C 443 Color output level
4) " 72 VHS PB Y/C delay
5) " 74 S-VHS PB Y/C delay
6) " 76 Y/C 627 OUT Y/C delay

3.1.4 Alignment tape specifications

- **MH-2**

No.	PB time	Video signal	Audio signal	Description
1	10 min.	Stairsteps	6 kHz	for check and adjustment of interchangeability for check and adjustment of the servo circuit for adjustment of audio head azimuth
2	5 min.	None	3 kHz	for check of tape speed for check of wow & flutter
3	10 min.	Color bars	1 kHz (0 dB)	for check and adjustment of video signal PB circuits for check and adjustment of audio signal PB circuits
4	3 min.	RF sweep	None	for adjustment of video head resonance and Q (Markers: 2 MHz, 4 MHz, 5 MHz)

Table 3-1 MH-2 specifications

- **MH-8**

No.	PB time	Video signal	Audio signal	Description
1	2 min.	Color sweep	400 Hz (–10 dB)	for check and adjustment of frequency characteristic in video PB circuits for check and adjustment of frequency characteristic in audio PB circuits
2	2 min.	"	100 Hz (–10 dB)	
3	2 min.	"	8 kHz (–10 dB)	
4	4 min.	"	–	

Table 3-2 MH-8 specifications

- **MH-F8**

No.	PB time	Video signal	Audio signal	Description
1	5 min.	–	Carrier only	for check and adjustment of mechanism interchangeability
2	5 min.	Stairstep	Carrier only	
3	5 min.	–	1 kHz (±50 kHz dev.)	for check and adjustment of FM audio PB circuits

Table 3-3 MH-F8 specifications

- **MH-2H**

No.	PB time	Video signal	Audio signal	Description
1	5 min.	Color bars S-VHS SP mode	None	for check and adjustment of PB circuits in S-VHS SP mode
2	5 min.	Color bars S-VHS LP mode	None	for check and adjustment of PB circuits in S-VHS LP mode

Table 3-4 MH-2H specifications

Note: With MH-2H tape used, playback of the segment for LP mode makes the set fall into the condition of "Warning 06".

3.1.5 Convenient fixtures

- **Shorting lead**
  To be used for shorting test pins

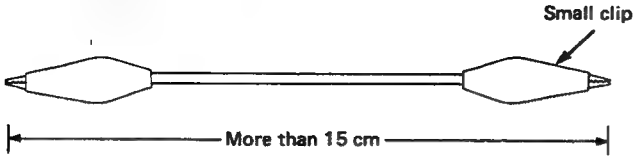

- **1 kΩ and 18 kΩ shorting lead**
  To be used for shorting test pins

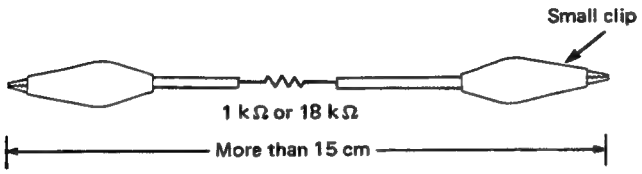

- **39 kΩ/0.022 μF shorting lead**

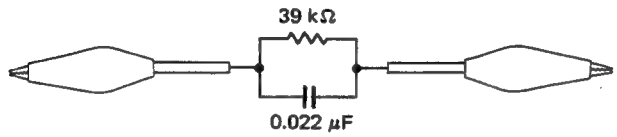

- **7-pin connector terminator**
  For terminating Y/C OUT terminal

▪ How to make this terminator:
Remove the cover of PGZ00247 and solder a 75-ohm resistor between pins 1 and 2 and another resistor between pins 5 and 6 as shown in the figure below.

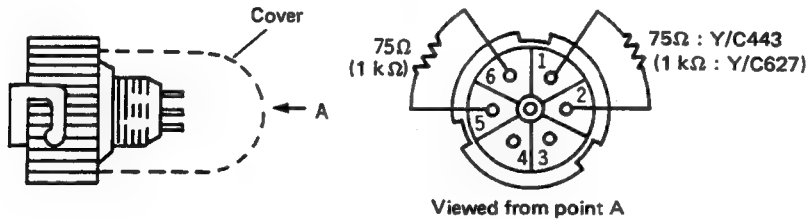

Note: Use 75-ohm resistor of ±1% in tolerance.

▪ Pin function of Y/C OUT terminal

Pin No.	Y/C443 Function Y/C627	
1	SEP. Y OUT	SEP. Y OUT
2	GND	GND
3	–	DUB D. FF
4	–	GND
5	SEP. C OUT	SEP. C OUT
6	GND	GND
7	–	DUB IN CONT

- **Big alligator clip**
  To make grounded-circuit for head resonance adjustment

▪ How to make:
1) Prepare two alligator clips and cut short one side each at the part shown in the figure.
2) Solder the cut sides of clips to each other (see figure).

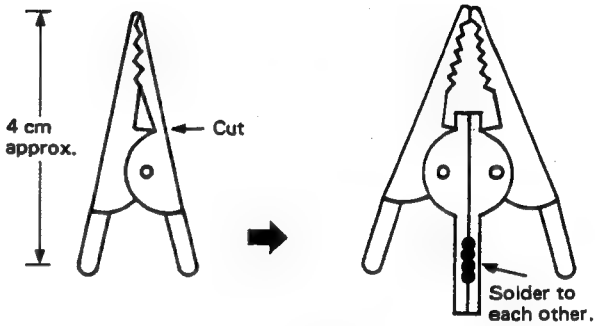

Note: If an alligator clip as big as to be able to catch the VIDEO PRE/REC AMP board and the bracket is available, it is unnecessary to make it originally.

3.2 POWER SUPPLY SYSTEM & SYSCON ADJUSTMENT

3.2.1 Regulator output voltage check

REGULATOR [1][7]

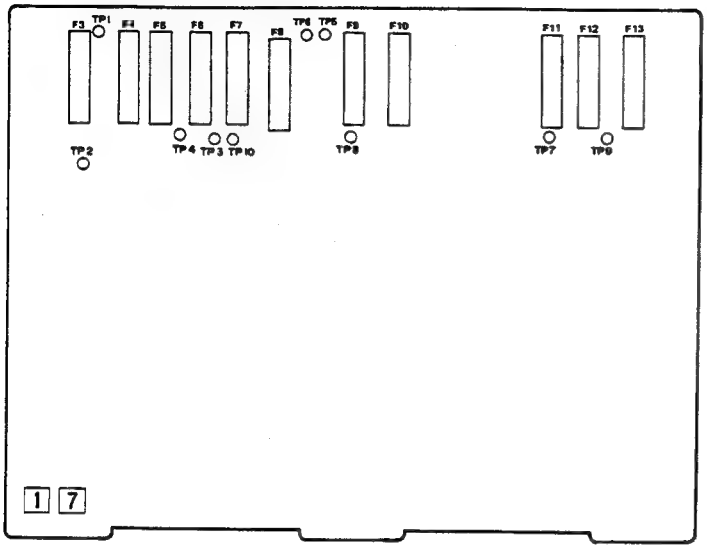

Measure DC voltage at the following test pins with a digital voltmeter, which is grounded to the board bracket of the REGULATOR board.

Check point	Standard voltage	Mode
Top of F4	$+12.0^{+0.3}_{-0.2}$ V DC	PB
TP2	+9.0 ± 0.3 V DC	
TP3	+5.1 ± 0.2 V DC	
TP4	+5.1 ± 0.2 V DC	
TP5	−14.0 ± 1.0 V DC	
TP6	+10.3 ± 0.5 V DC	
TP7	+16.5 ± 1.0 V DC	
TP8	+18.0 ± 1.0 V DC	
TP9	+12.0 ± 0.4 V DC	
TP10	+15.0 ± 0.4 V DC	REC

3.2.2 Syscon board [1][2]

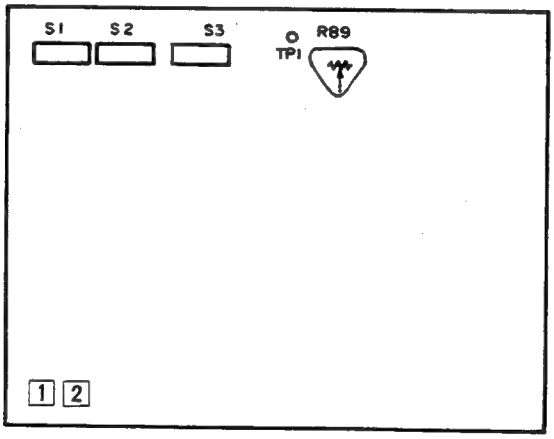

No.	Item	Check point	Adjustment Parts	Signal	Mode	Description
1	A/D for V. speed	TP1 [1][2] ↓ Digital voltmeter	R89 [1][2]	No signal	STILL	1) Add 2.70 ± 0.05 V DC to connector CN1 pin 18b of the SYSCON board [1][2]. 2) Adjust R89 to obtain 1.00 ± 0.02 V DC at TP1.

3.3 SERVO SYSTEM ADJUSTMENT

- Adjustment in this section is for the drum servo and capstan servo systems. (For adjustment of the reel servo system, refer to Section 2.6.13.)
- For adjustment of the SERVO-1 board, it is required to connect the extension board PGJ05016.
- Unless otherwise indicated, set switches and VRs as follows.

Front panel

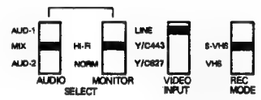

(Inside switch cover)

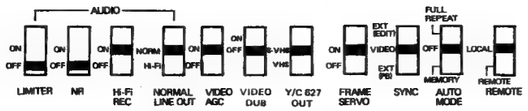

Every VR : Set to the center position.

Rear panel

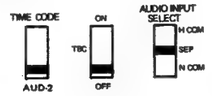

No.	Item	Check point	Adjustment Parts	Signal	Mode	Description
1	Capstan FG duty cycle	TP203 [1][1] TP204 [1][1] GND: TP11 [1][1]	R261 [1][1] R262 [1][1]		PB	1) Adjust R261 so that duty cycle at TP203 is 50% (A = B). 2) Adjust R262 so that duty cycle at TP204 is 50% (A = B).
2	Capstan stop servo	TP207 [1][1] TP208 [1][1] TP209 [1][1] GND: TP11 [1][1]	R263 [1][1] R264 [1][1]		PB ↓ X1/30 ↓ STOP	1) In playback, adjust R263 so that duty cycle at TP207 is 50% (A = B). 2) In FWD X1/30 mode, adjust R264 to obtain 1.4 V DC as minimum level of waveform at TP208. 3) In stop mode, confirm that voltage at TP209 is constant as 5 V DC or 0 V DC.

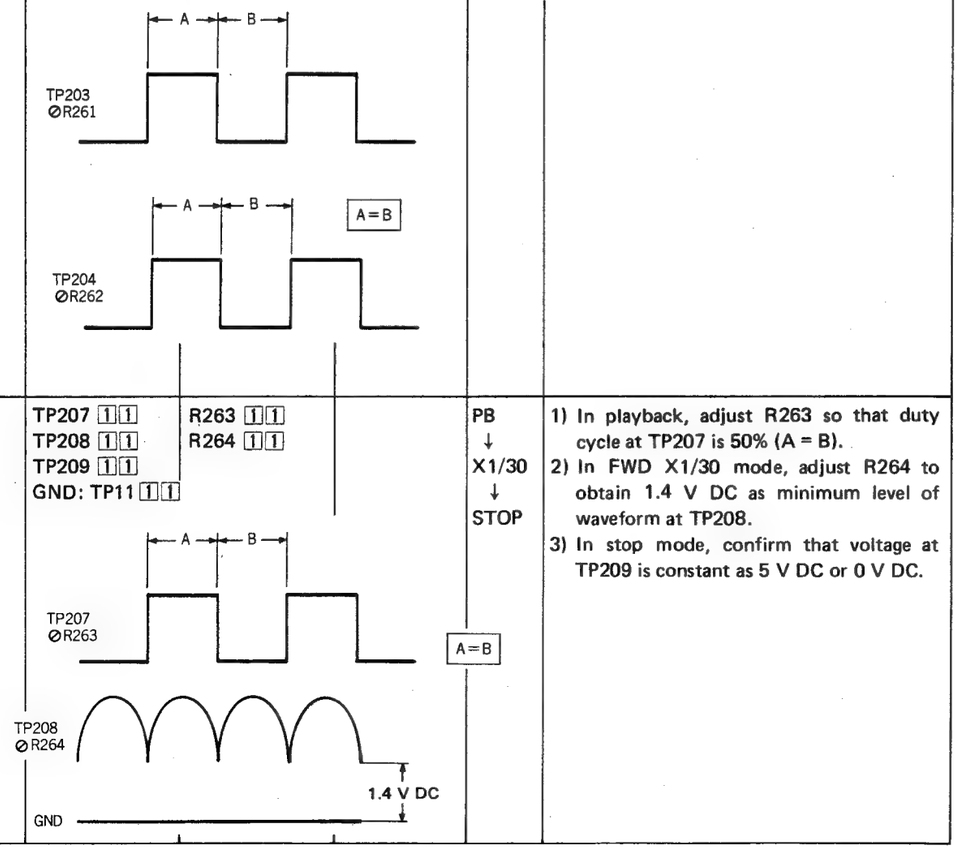

- **Location of check points and adjustment parts**

SERVO 2 [1][1]

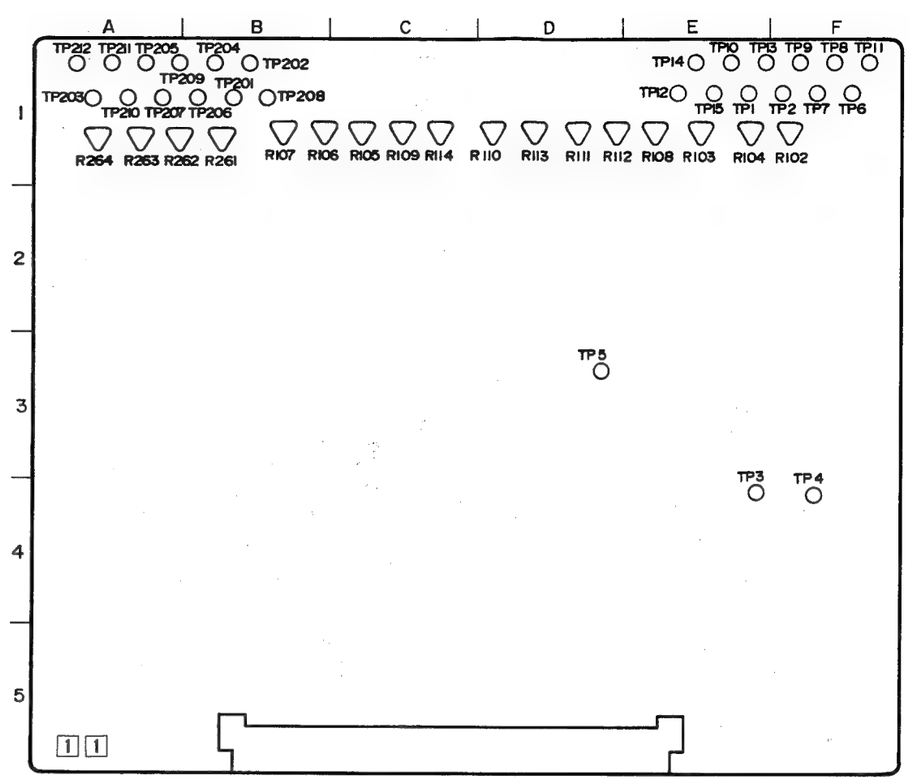

TP	1	2	3	4	5	6	7	8	9	10	11	12	13	14	15	201	202	203	204	205
Sect.	E1	E1	E4	F4	D3	F1	F1	F1	F1	E1	F1	E1	E1	E1	E1	B1	B1	A1	B1	A1
TP	206	207	208	209	210	211	212													
Sect.	B1	A1	B1	A1	A1	A1	A1													

R	102	103	104	105	106	107	108	109	110	111	112	113	114	261	262	263	264
Sect.	F1	E1	E1	C1	B1	B1	E1	C1	D1	D1	D1	D1	C1	B1	A1	A1	A1

SERVO 1 [1][0], SERVO 1 SUB [4][0]

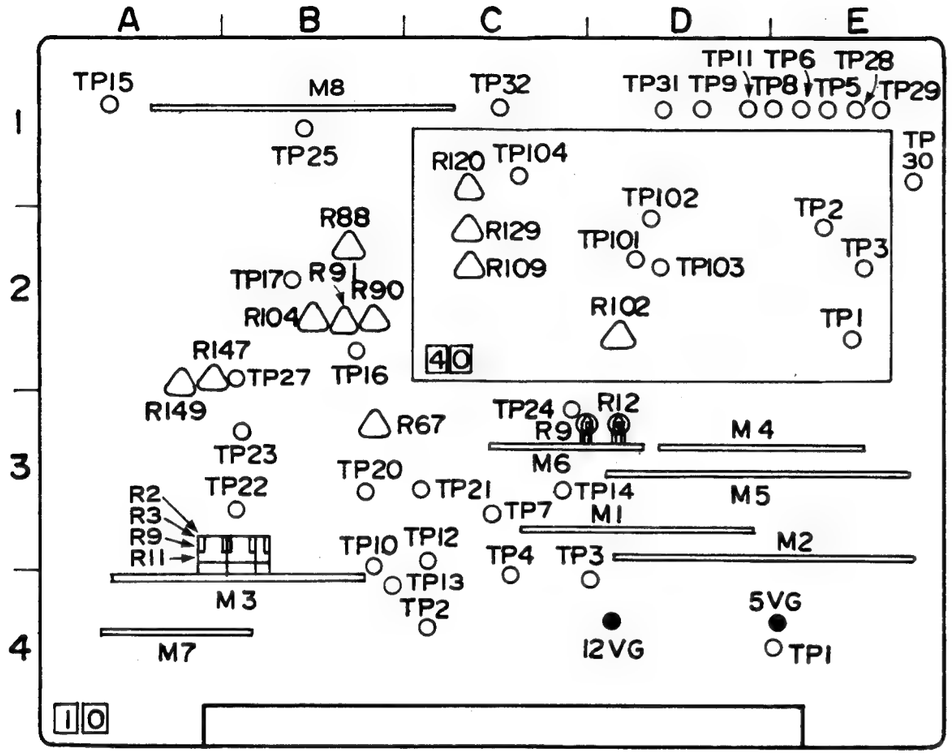

[1][0]

TP	1	2	3	4	5	6	7	8	9	10	11	12	13	14	15
Sect.	E4	C4	D4	C4	E1	E1	C3	E1	D1	B3	D1	C3	B4	C3	A1
TP	16	17	20	21	22	23	24	25	27	28	29	30	31	32	
Sect.	B2	B2	B3	C3	B3	B3	C3	B1	B2	E1	E1	E2	D1	C1	

R	67	88	90	91	104	147	149	5VG	12VG
Sect.	B3	B2	B2	B2	B2	A2	A2	D4	E4

[1][0] M3

R	2	3	9	11
Sect.	3B	3B	3B	3B

[1][0] M6

R	9	12
Sect.	3D	3D

[4][0]

TP	1	2	3	101	102	103	104
Sect.	E2	E2	E2	D2	D2	D2	C1

R	102	109	120	129
Sect.	D2	C2	C1	C2

No.	Item	Check point	Adjustment Parts	Signal	Mode	Description
3	PB switching point	VIDEO OUT (75Ω terminated)	R2 [1][0] M3 R3 [1][0] M3 R9 [1][0] M3 R11 [1][0] M3	MH-2 (Stairstep)	PB ↓ STILL	1) Play back the stairstep segment of the alignment tape MH-2. 2) Connect an oscilloscope to TP13 [1][0] for external trigger by minus (–) slope, and adjust R3 so that the value of "A" (in the figure) is 8.5H. 3) Trigger the oscilloscope by plus (+) slope and adjust R2 so that the value of "B" (in the figure) becomes 8.5H. 4) Proceed to the next adjustment of switching point of the search head. Switch S2 of the PB Y board to "OFF" position and set the mode to the still. 5) Connect the oscilloscope to the V-RF terminal on the front panel to confirm FM waveform flat. If not, use the SEARCH or JOG dial to make it flat prior to proceeding to the next step 6). 6) Adjust R9 to obtain the same result as the step 2) above and adjust R11 for the same as the step 3) respectively. 7) Reset S2 [0][2] to "ON" position. – slope B = 8.5H – STILL: ⊘ R9 + slope B = 8.5H – STILL: ⊘ R11 • ⊖ slope Trigger point A VIDEO OUT S2 [0][2] :OFF A = 8.5H – PB : ⊘ R3 • ⊕ slope Trigger point B B = 8.5H – PB : ⊘ R2
4	REC switching point	VIDEO OUT (75Ω terminated)	R120 [4][0]	Color bars	REC	1) Trigger the oscilloscope to TP13 [1][0]. 2) Adjust R120 so that period from the trigger point to the falling edge of V sync is 8.5H in both trigger modes (by minus and plus slopes) of the oscilloscope.

3-8

No.	Item	Check point	Adjustment Parts	Signal	Mode	Description
5	Drum discrimination	TP104 [4][0]	R67 [1][0]	Color bars	REC	1) Shortcircuit between TP103 [4][0] and GND with a shorting lead. 2) Adjust R67 to position sampling pulse at the center of trapezoidal waveform of TP104. 3) Remove the shorting lead.
		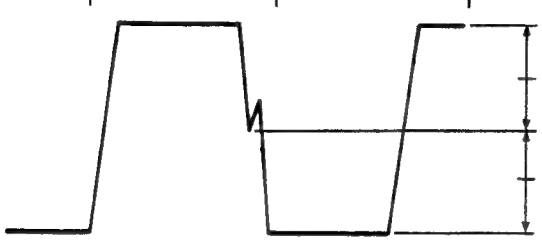 TRIG: TP11-[1][0]				
6	Drum search	TP20 [1][0] ↓ Frequency counter TP20 : 696 ± 1 Hz TP6 [1][6] TP5VG [1][0] : (GND) ↓ Digital voltmeter	R9 [1][0] M6 R12 [1][0] M6	Color bars	STILL	• TBC SW : OFF 1) Shortcircuit between TP30 [1][0] and TP31 [1][0] with a shorting lead. 2) Adjust R9 on M6 so that frequency at TP20 is 696 ± 1 Hz in Still mode. 3) Measure voltage at TP16 with a digital voltmeter, and take note of the measured value as "A" mVp-p. 4) Remove the shorting lead. 5) Shortcircuit between TP30 [1][0] and GND with a shorting lead. 6) Measure voltage at TP16 with a digital voltmeter and adjust the voltage to be "A" ± 5 mVp-p with R12 on [M][6]. 7) Remove the shorting lead.
7	Capstan discrimination	TP101 [4][0]	R90 [1][0]	Color bars	REC	1) Shortcircuit between TP102 [4][0] and GND with a shorting lead. 2) Adjust R90 to position sampling pulse at the center of TP101's trapezoidal waveform. 3) Remove the shorting lead.
		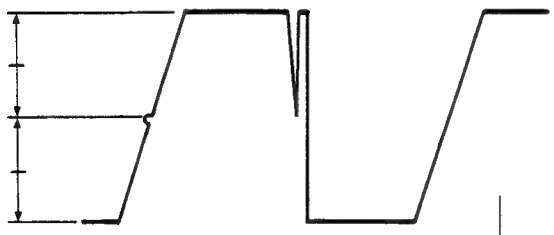 TRIG: TP11-[1][0]				

No.	Item	Check point	Adjustment Parts	Signal	Mode	Description
8	Slow discrimination	TP17 [1][0] ↓ Digital Voltmeter FWD x 1/2 = X STILL = X + (0 ± 5 mV)	R104 [1][0]	Color bars	X1/2 FWD ↓ STILL	1) Measure DC level at TP17 in FWD X1/2 mode with a digital voltmeter. **Note:** Measure an average value since it fluctuates violently. 2) In Still mode, adjust R104 to raise the DC level at TP17 to 0 ± 5 mV higher than that of the step 1).
		TP15 [1][0] ↓ Frequency counter TP15 : 757 ± 10 Hz	R91 [1][0]	Color bars	X 1/2	3) Measuring frequency at TP15 in FWD X1/2 mode by a frequency counter, adjust R91 to obtain 757 ± 10 Hz for it. 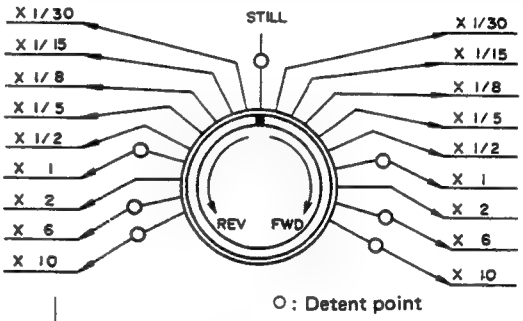 O : Detent point
9	Search speed	TP15 [1][0] ↓ Frequency counter −10% speed : 1363 ± 20 Hz +10% speed : 1666 ± 20 Hz	R147 [1][0] R149 [1][0]	Color bars	PB	1) Record color bar signal and playback the tape. Then set the REMOTE/LOCAL switch to "REMOTE". 2) Ground pins 39 (X1/5) & 42 (EXT CAP SRH) of the 45-pin connector on the rear panel. 3) Adjust R147 to obtain 1363 ± 20 Hz as level at TP15. 4) In the same manner as the above steps, ground pins 37 (X2) and 42 and adjust R149 to obtain 1666 ± 20 Hz for TP15.
10	REC CTL duty pulse	TP1 [4][0] 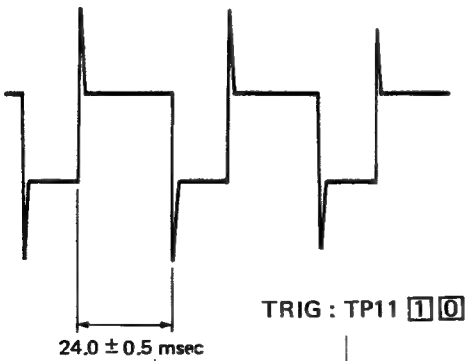 TRIG : TP11 [1][0]	R129 [4][0]	Color bars	REC	1) By turning R129 adjust the CTL pulse width to be 24.0 ± 0.5 msec.

No.	Item	Check point	Adjustment Parts	Signal	Mode	Description
11	Tracking preset	VIDEO OUT TP2 [4][0]	R102 [4][0]	Color bars	REC ↓ PB	1) Set the TRACKING VR to the center detent position. 2) Playing back the signal recorded by the same set, align the falling edge of V. SYNC at the VIDEO OUT terminal with the negative peak of CTL pulse at TP2 by turning R102.
		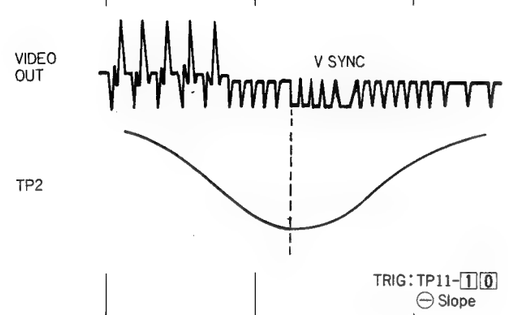				
12	X2 preset	VIDEO OUT ↓ Monitor TV	R109 [4][0]	MH-2 (Stairstep)	Search X2	1) In FWD Search X2 mode, adjust R109 to erase noise bars on the monitor TV.

3.4 AUDIO SYSTEM ADJUSTMENT

- For adjustment of the FM AUDIO and NORMAL AUDIO boards, use the extension board PGJ05004. For a reference, these two boards cannot be taken out of the set since they are connected to other boards with wires.
- 0 dBs = 0.775 Vrms = 2.19 Vp-p
- Mode of the AUDIO circuit is not determined by the REC MODE switch, but done by the tape used (S-VHS or VHS).
  When operation mode is specified, use a cassette tape of the indicated mode.

- Unless otherwise indicated, set switches and VRs as follows.

Front panel

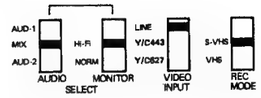

HiFi REC LEVEL VR : Set it according to No. 1.
NORMAL REC LEVEL VR : Set it according to No. 4.
Other VRs : Set to the center position respectively.

(Inside switch cover)

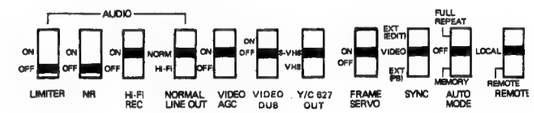

Rear panel

3-11

- **Location of check points and adjustment parts**

FM AUDIO 0 7

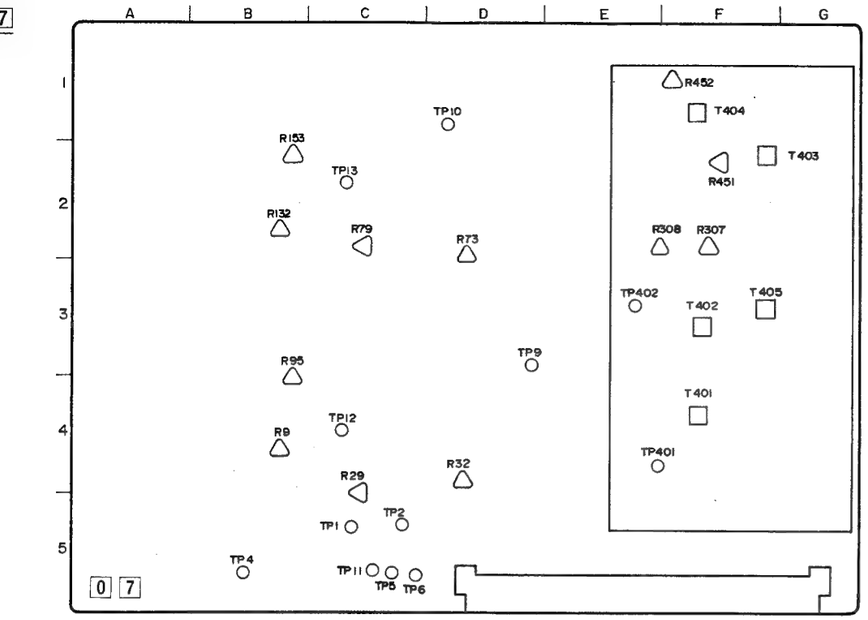

TP	1	2	4	5	6	9	10	11	12	13	401	402
Sect.	C5	C5	B5	C5	C5	D3	D1	C5	C4	C2	F4	E3

T	401	402	403	404	405
Sect.	F4	F3	F2	F1	F3

R	9	29	32	73	79	95	132	153	307	308	451	452
Sect.	B4	C4	D4	D2	C2	B3	B2	B2	F2	F2	F2	F1

NORMAL AUDIO 0 8

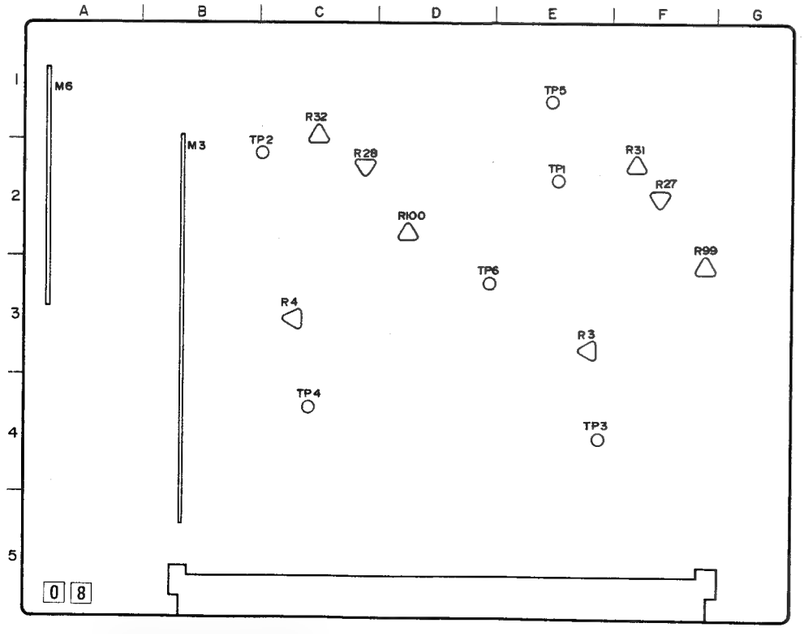

R	3	4	27	28	31	32	99	100
Sect.	E3	C3	F2	C2	F2	C1	F3	D2

TP	1	2	3	4	5	6
Sect.	E2	C2	E4	C4	E1	D3

No.	Item	Check point	Adjustment Parts	Signal	Mode	Description
1	Hi-Fi REC LEVEL VR	Hi-Fi OUT ↓ Audio tester	Hi-Fi REC LEVEL VR −6.0 dBs (Front panel)	1 kHz/−6 dBs ↓ Hi-Fi IN	E-E	1) Adjust the Hi-Fi REC LEVEL VR to set Hi-Fi audio output level of both channels for −6.0 dBs. **Note:** For further adjustments in this section leave the REC LEVEL VR as it was set as above.
2	Hi-Fi LEVEL METER	AUDIO LEVEL METER 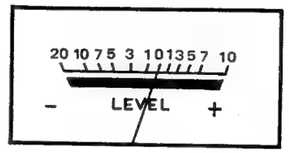	L-ch: R2 3 9 R-ch: R3 3 9	1 kHz/−6 dBs ↓ Hi-Fi IN 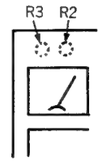	E-E	1) Correctly set the audio level meter so that the needle points just "0" as viewed squarely. R2 and R3 can be exposed on the tracking meter by taking off the front panel.
3	NORMAL REC LEVEL VR setting & LEVEL METER check	N. AUDIO OUT ↓ Audio tester	NOR REC LEVEL VR	1 kHz/−6 dBs ↓ N. AUDIO IN	E-E AUD. MONI. SELECT :"NOR"	1) Set the AUDIO MONITOR OUT switch to "NORMAL" position. 2) Adjust the NORMAL REC LEVEL VR so that NORMAL AUDIO OUT level is −6 dBs for both channels. **Note:** For further adjustments in this section leave the REC LEVEL VR as it was set as above. 3) Looking at the AUDIO LEVEL meter squarely, confirm that the pointer shakes in a range of 0 ± 0.5 graduation.
4	Normal audio frequency characteristic	N. AUDIO OUT ↓ Audio tester Specifications of frequency characteristic 400 Hz: 0 dB (Reference) 100 Hz: +0.5 ± 2.0 dB 8 kHz: 0 dB	L-ch: R27 0 8 R-ch: R28 0 8	MH-8 (400 Hz 100 Hz 8 kHz)	PB	1) Confirm that PB level of 100 Hz segment of the alignment tape MH-8 is +0.5 ± 2.0 dB in comparison with PB level of the 400 Hz segment. 2) By turning R27 (L-ch) and R28 (R-ch), equalize PB level of the 8 kHz signal with that of the 400 Hz signal.
5	Normal audio PB level	N. AUDIO OUT ↓ Audio tester PB level : −8.0 dBs	L-ch: R31 0 8 R-ch: R32 0 8	MH-2 (1 kHz)	PB	1) Adjust PB level of the 1 kHz segment of the alignment tape MH-2 for −8.0 dBs.

No.	Item	Check point	Adjustment Parts	Signal	Mode	Description
6	Audio bias frequency & level	TP5 [0][8] ↓ Frequency counter Bias freq.: 70 ± 3 kHz	L405 [0][7]	No signal	REC	1) Adjust L405 to obtain 70 ± 3 kHz as bias frequency at TP5.
		L-ch: TP5 [0][8] R-ch: TP6 [0][8] ↓ Oscilloscope Bias osc. level: Max.	L-ch: T403 [0][7] R-ch: T404 [0][7]	No signal	REC	2) Maximize bias oscillation level for both channels.
		L-ch: CN1 pin 2 (GND: CN1 pin 1) R-ch: CN1 pin 3 (GND: CN1 pin 4) (All in [3][5]) ↓ Audio tester S-VHS bias level: 4.6 mVrms	L-ch: R451 [0][7] R-ch: R452 [0][7]	No signal	S-VHS REC	**Note 1:** The A/C HEAD board [3][5] is located near the drum ass'y. 3) Adjust bias level for 4.6 mVrms. • If result is unsatisfactory, repeat the step 2) above.
		Same as above VHS bias level : 3.2 mVrms	L-ch: R307 [0][7] R-ch: R308 [0][7]	No signal	VHS REC	4) Adjust bias level for 3.2 mVrms. **Note 2:** S-VHS and VHS bias levels specified in the above steps will be possibly re-adjusted in the next item No. 8. The following are specifications for re-adjustment. S-VHS : 3.0—6.0 mVrms VHS : 2.2—4.2 mVrms
7	Normal audio REC/PB level	N. AUDIO OUT ↓ Audio tester VHS REC/PB level: −6.0 ± 0.5 dBs (Channel difference: within 0.5 dB)	L-ch: R3 [0][8] R-ch: R4 [0][8]	1 kHz/−6 dBs ↓ N. AUDIO IN	VHS REC ↓ PB	1) Record 1 kHz/−6 dBs signal and play it back. 2) At this time, confirm that PB level is −6.0 ± 0.5 dBs and channel difference is within 0.5 dB. • If not, roughly adjust R3 for L-ch while R4 for R-ch once, and then repeat the steps 1) and 2) until satisfactory results are obtained.
		Same as above S-VHS REC/PB level: $-6.0^{+1.8}_{+0.2}$ dBs (Channel difference: within 0.5 dB)	—	1 kHz/−6 dBs ↓ N. AUDIO IN	S-VHS REC ↓ PB	3) Record 1 kHz/−6 dBs signal and play it back. 4) At this time, confirm that PB level is $-6.0\ ^{+1.8}_{+0.2}$ dBs and channel difference is within 0.5 dB. • If not, turn R3 for L-ch while R4 for R-ch not to exceed tolerance of VHS REC/PB level specifications, and then repeat the steps 3) and 4) to obtain satisfactory results.

No.	Item	Check point	Adjustment Parts	Signal	Mode	Description
8	Normal audio REC/PB freq. characteristic	N. AUDIO OUT ↓ Audio tester Frequency characteristic (S-VHS NR switch: OFF) 1 kHz | 0 dB (Reference) 10 kHz | 0.0 ± 0.5 dB	–	–26 dBs, (1 kHz 10 kHz) ↓ N. AUDIO IN	S-VHS REC ↓ PB	1) Record –26 dBs 1 kHz and 10 kHz signals and play them back respectively. 2) Confirm that PB level of the 10 kHz signal is 0.0 ± 0.5 dB in comparison to that of the 1 kHz signal. • If it is out of the specifications; a) PB level of 10 kHz signal is higher: According to the previous item No. 6 step 3), raise the bias level not to exceed the limit of 6.0 mVrms. b) PB level of 10 kHz signal is lower: Decrease the bias level in the same manner as the above step a). (3.0 mVrms at the lowest) After the above adjustment, repeat the steps 1) and 2) until a satisfactory result is obtained.
		Same as above Frequency characteristic (VHS NR switch: OFF) 1 kHz | 0 dB (Reference) 10 kHz | 0.0 ± 0.5 dB	–	–26 dBs (1 kHz 10 kHz) ↓ N. AUDIO IN	VHS REC ↓ PB	6) Record the 1 kHz and 10 kHz signals and play them back respectively. 7) Comparing both the PB levels, confirm that 10 kHz level is 0.0 ± 0.5 dB. • If the result is out of the specifications; a) 10 kHz PB level is lower: Decrease the bias level according to the previous item 6 step 4) (2.2 mVrms at the lowest). b) 10 kHz PB level is higher: Increase the bias level in the same manner as the above step a) (4.2 mVrms at the maximum). After the above adjustment a) or b), repeat the steps 6) and 7) to meet the specifications.
		N. AUDIO OUT ↓ Audio tester Frequency characteristic (VHS NR switch: ON) 1 kHz | 0 dB (Reference) 12 kHz | 0.0 ± 2.5 dB	–	–26 dBs (1 kHz 12 kHz) ↓ N. AUDIO IN	VHS REC ↓ PB NR SW :"ON"	8) With the NR switch turned on, record the 1 kHz and 12 kHz signals and play them respectively. 9) Comparing to the 1 kHz signal, PB level of the 12 kHz signal is 0.0 ± 2.5 dB and channel difference is within 3.0 dB.

No.	Item	Check point	Adjustment Parts	Signal	Mode	Description
9	Audio dub. erase voltage	TP402 [0][7] ↓ Oscilloscope : (CH-1) ERASE level : Max.	T402 [0][7]	No signal	AUDIO DUB	1) Maximize ERASE level at TP402.
		TP401 [0][7] ↓ Oscilloscope : (CH-2) ERASE level : Max.	T402 [0][7]	No signal	REC	2) Maximize ERASE level at TP401.
		TP401 [0][7] TP402 [0][7] ↓ Oscilloscope REC ERASE level : more than 180 mVp-p.	T402 [0][7]	No signal	STOP ↓ AUDIO DUB ↓ REC	3) After the above adjustment, repeat the steps 1) and 2) untila satisfactory result is obtained.
10	Crosstalk cancel	N. AUDIO OUT (L-ch) ↓ Audio tester Output level (crosstalk) : Minimum	R99 [0][8]	3 kHz/ −20 dBs ↓ N. AUDIO IN (R-ch)	AUDIO DUB	1) Set to AUDIO DUB mode with a blank cassette tape on which no audio signal has been recorded. 2) Minimize L-ch output level by R99.
11	Hi-Fi audio PB level	Hi-Fi OUT ↓ Audio tester Hi-Fi audio PB level: −6.0 dBs	L-ch: R9 [0][7] R-ch: R132 [0][7]	MH-F8 (1 kHz)	PB	1) Adjust R9 (L-ch) and R132 (R-ch) so that PB output level of the 1 kHz segment of the alignment tape MH-F8 is −6.0 dBs for both channels.

No.	Item	Check point	Adjustment Parts	Signal	Mode	Description
12	Hi-Fi audio carrier freq.	TP1 [0][7] ↓ Frequency counter	R29 [0][7]	No signal	REC	1) Adjust R29 so that carrier frequency at TP1 becomes $1.400^{+0.000}_{-0.005}$ MHz.
		L-ch carrier frequency: $1.400^{+0.000}_{-0.005}$ MHz				
		TP2 [0][7] ↓ Frequency counter	R79 [0][7]	No signal	REC	2) Adjust R79 so that carrier frequency at TP2 becomes $1.800^{+0.000}_{-0.005}$ MHz.
		R-ch carrier frequency: $1.800^{+0.000}_{-0.005}$ MHz				
13	Hi-Fi audio REC FM level	TP4 [0][7] ↓ Oscilloscope	R32 [0][7] R73 [0][7]	No signal	REC	1) Turn R32 [0][7] fully clockwise as viewed from the parts side. 2) Adjust R73 so that signal level at TP4 is temporarily becomes 1.4 Vp-p. 3) Turn R32 and R73 alternately for fine adjustment of the level to meet the specifications.
		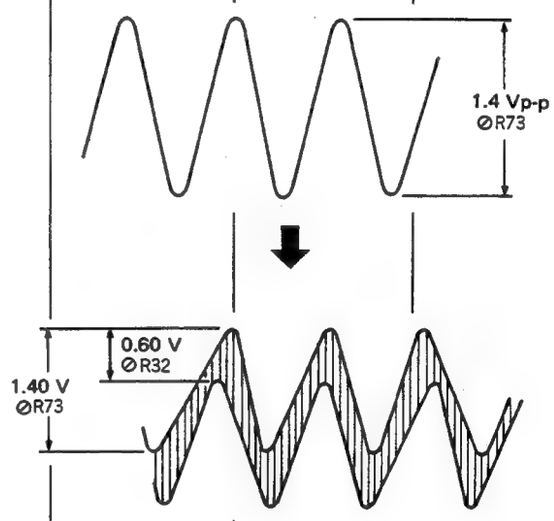				
14	VHS Hi-Fi audio REC/PB level	Hi-Fi OUT ↓ Audio tester	L-ch: R95 [0][7] R-ch: R153[0][7]	1 kHz/−6 dBs ↓ Hi-Fi IN	VHS REC ↓ PB	1) Record the 1 kHz/−6 dBs signal and play it back. 2) Confirm that PB level is −6.0 ± 0.5 dBs for both channels and channel difference is within 0.5 dB. • If not: When L-ch is out of the specifications, roughly turn R95, while R153 for R-ch, and then repeat the steps 1) and 2) until it meets the specifications.
		VHS Hi-Fi AUDIO REC/PB level: −6.0 ± 0.5 dBs (Channel difference: within 0.5 dB)				

No.	Item	Check point	Adjustment Parts	Signal	Mode	Description
15	S-VHS Hi-Fi audio REC/PB level	Hi-Fi OUT ↓ Audio tester (L-ch / R-ch)	—	1 kHz/—6 dBs ↓ Hi-Fi IN	S-VHS REC ↓ PB	1) Record the 1 kHz/—6 dBs signal and play it back. 2) Confirm that PB level of the signal is —6.0 ± 1.0 dBs and channel difference is within 0.5 dB.
		S-VHS Hi-Fi AUDIO REC/PB level: —6.0 ± 1.0 dBs (Channel difference: within 0.5 dB)				
16	AUDIO RF level	Front : A-FF	R80 [0] [9]	No signal	VHS REC ↓ PB	1) Without supply of input signal, perform recording and playback of the recorded section. 2) Adjust R80 to obtain 200 mVp-p as the FM level of a channel whose PB signal level is lower than that of the other channel.

3.5 VIDEO SYSTEM ADJUSTMENT

- It is required to use an extension board for adjustment of the following boards.

1. Extension board PGJ05004 for PB Y [0][2], PB COLOR [0][3], CROSS TALK CANCEL [6][3], Y 2H DELAY [6][5] boards
2. " PGJ05005 for REC Y [0][1], Y/C SEP [0][4], REC C [6][6], FM REC/PB [6][7] boards
3. " PGJ05006 for SERVO 2 [1][1], C.F. SERVO [3][6], RF 2H DELAY [3][7] boards
4. " PGJ05007-2 for VIDEO PRE/REC AMP [0][5] board

- VIDEO PRE/REC AMP [0][5] board
  Prior to electrical adjustment of this board, connect the extension board PGJ05007-2 in the following order.
  1) Remove a screw and take off the cleaner board.
  2) Disconnect CN1 [0][5] .
  3) After removing two screws fixing the board bracket, lift it and connect the extension board.
  4) Take off the shield cover and connect CN1 to the board again.
  5) Catch the rear frame A and left board bracket by a big alligator clip for shortcircuit between them (see figure).

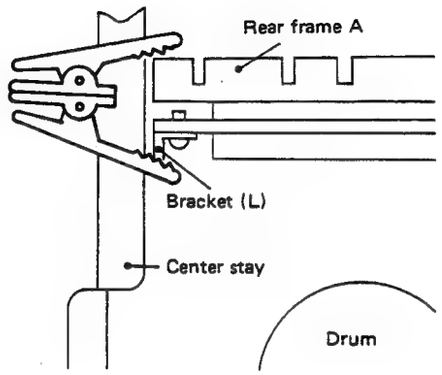

- Unless otherwise indicated, set switches and VRs as shown below.

Switches of the board

REC COLOR [6] [6]	SW1 (left side)
PB Y [0] [2]	SW1 (Upper side) SW2 (lower side)

Switches inside the switch cover

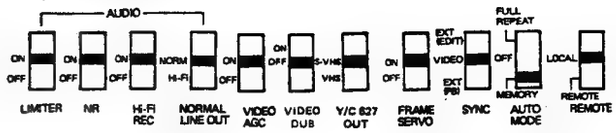

On the front panel

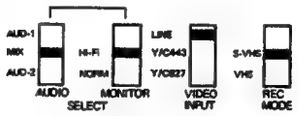

On the rear panel

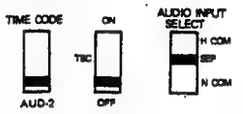

VIDEO LEVEL VR : Set it according to the item No. 1.

No.	Item	Check Point	Adjustment Parts	Signal	Mode	Description
1	MID input level	TP15 [0] [4]	VIDEO LEVEL VR	Color bars AGC : "OFF"	E-E	1) Set the AGC switch (on the front panel) to "OFF" position. 2) Adjust the VIDEO LEVEL VR (front panel) to obtain 1.1 Vp-p at TP15 for video signal level. 3) Set the oscilloscope for the ADD mode and observe TP1 and INV TP2 waveforms. 4) Adjust R16 to minimize level of the chroma signal.
		TP1 [0] [4] TP2 [0] [4]	R16 [0] [4]			
	Note: For further adjustments of the item No. 2 through 17, keep the VIDEO LEVEL VR as it is hereby set.					
2	CCD (1) bias	TP3 [0] [4] TP5 [0] [4]	R42 [0] [4] R43 [0] [4]	Color bars AGC : "OFF"	E-E	1) Observing waveform at TP3 with the oscillsoscope set for DC coupling, temporarily adjust R42 to minimize DC components of the waveform. 2) At the same time, adjust R43 to obtain 2.7 V DC at TP5 as its level.
		TP3 [0] [4] TP5 [0] [4]	R42 [0] [4]	Color bars AGC : OFF	E-E	3) Set the oscilloscope for 500 mV/div. DC coupling and connect its probe to TP4. 4) Move the oscilloscope " ↕ " POSITION knob up and down to position the waveform's DC potential on the center line of the screen. 5) Change oscilloscope's connection from TP4 to TP3 and adjust R42 so that DC potential of TP3 is 0.65 V DC higher than the oscilloscope's center line (TP4 level).
	2.7 V DC ⊘R43 — TP5 GND 0.65 V DC ⊘R42 — TP3 Center (TP4) DC potential of TP3 is 0.65 V DC higher than that of TP4.					
3	CCD input level	TP6 [0] [6]	R49 [0] [6]	Color bars AGC : "OFF"	E-E	1) Adjust R49 to obtain 0.5 Vp-p as the level at TP6.

No.	Item	Check Point	Adjustment Parts	Signal	Mode	Description
4	CCD (2) bias	TP6 [0][4] TP8 [0][4]	R52 [0][4] R53 [0][4]	Color bars AGC : "OFF"	E-E	1) Observing waveform at TP6 with the oscilloscope set for DC coupling, adjust R52 temporarily to minimize DC components of the waveform. 2) At the same time, adjust R53 to obtain 2.7 V DC as DC potential at TP8. 3) Set the oscilloscope for 500 mV/div. DC coupling, and connect it to TP7. 4) Move the oscilloscope's " ‡ " POSITION knob up and down to position TP7's DC potential on the center line of the oscilloscope. 5) Change oscilloscope's connection from TP7 to TP6 and adjust R52 so that average DC level of TP6 is 0.65 V DC higher than the center line (TP7 level).
		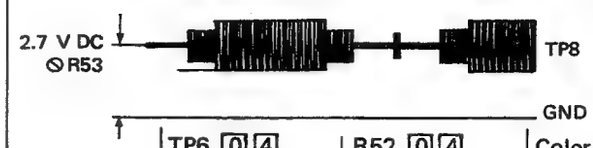				
		TP6 [0][4] TP7 [0][4]	R52 [0][4]	Color bars AGC : "OFF"	E-E	
		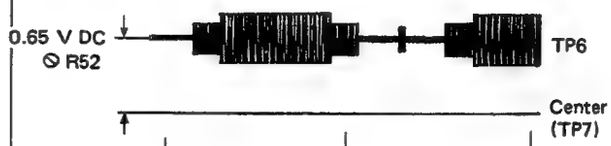				
5	2H delay	TP10 [0][4] TP11 [0][4]	R68 [0][4] R64 [0][4]	Color bars AGC : "OFF"	E-E	1) Set the oscilloscope for the ADD mode, and observe TP10 and TP11 waveforms. 2) Alternately adjust R68 and R64 to minimize level of the chroma signal.
6	Y_H level	TP12 [0][4]	R103 [0][4]	3.9 MHz osc. (Model 410P - JVC : LEADER) AGC : "OFF"	E-E	1) Adjust R103 to minimize the 3.9 MHz sine wave at TP12.
		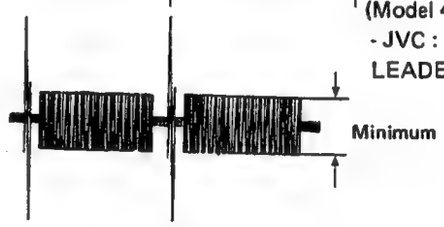				
7	Chroma leak	TP5 [0][1]	R111 [0][4] R112 [0][4]	Color bars AGC : "OFF" REC MODE : VHS	E-E	1) Alternately adjust R111 and R112 to minimize chroma leakage. 2) Confirm that chroma leak is less than 50 mV.
		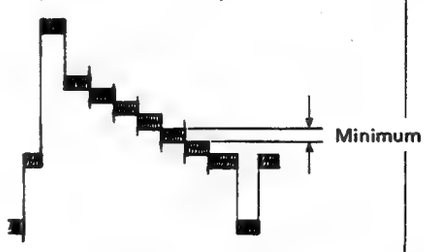				
8	SEP Y & C level	TP13 [0][4] TP15 [0][4] TP12 [0][4]	R122 [0][4] R127 [0][4]	Color bars AGC : "OFF"	E-E	1) Adjust R122 to equalize levels at TP13 and TP15. 2) Adjust R127 so that burst level at TP12 becomes 0.3 Vp-p.
9	AGC level	TP2 [0][1]	R42 [0][1]	Color bars	E-E	1) Adjust R42 to obtain 0.56 Vp-p as the level between sync. tip at TP2 and the 100% white.

No.	Item	Check Point	Adjustment Parts	Signal	Mode	Description
10	N (color) Y level	TP6 [0][1]	R93 [0][1]	Color bars	E-E	1) Adjust R93 so as to obtain 0.4 Vp-p as the signal level at TP6.
11	N (B/W) Y phase EQ & Y level	TP6 [0][1] TP12 [0][1] : (GND)	R100 [0][1]	2T pulse	E-E	1) Use such a shorting lead as shown below to make a shortcircuit between TP18 [6][6] and TP21 [6][6] . 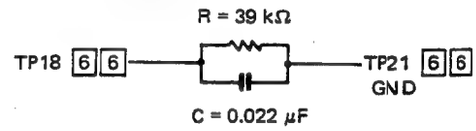 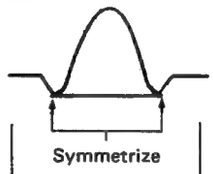 2) Adjust R100 to symmetrize TP6's 2T pulse in the lower portion of the waveform.
		Same as above	R101 [0][1]	Grey scale	E-E	3) Adjust R101 so that Y level of TP6's signal becomes 0.4 Vp-p between the sync. tip and the white 100% levels. 4) Remove the shorting lead.
12	S-VHS Sub-emphasis input level	TP9 [0][1]	R128 [0][1]	Color bars	S-VHS E-E	1) Adjust R128 to obtain 0.4 Vp-p at signal level at TP9. 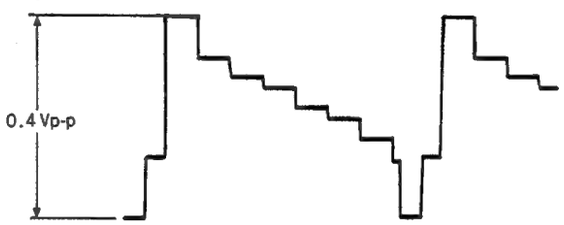
13	S-VHS Sub-emphasis circuit power supply voltage	TP8 [0][1] ↓ Digital voltmeter TP8 : 5.00 ± 0.02 V DC	R130 [0][1]	Color bars	S-VHS E-E	1) Adjust DC potential at TP8 to be 5.00 ± 0.02 V DC.

No.	Item	Check Point	Adjustment Parts	Signal	Mode	Description
14	S-VHS Sub-emphasis output level	TP10 [0] [1]	R148 [0] [1]	Color bars	S-VHS E-E	1) Adjust R148 to obtain 0.3 Vp-p as signal level at TP10.
15	S-VHS Sub-emphasis limiter balance	C120 [0] [1] (right side) ↓ Digital voltmeter TP13 : 3.48 ± 0.01 V DC	R151 [0] [1]	No signal	S-VHS E-E	1) Adjust C120 (right side) signal level to be 3.48 ± 0.01 V DC.
16	White & Dark clip	TP3 [0] [1]	R29 [0] [1] R39 [0] [1]	Pulse & bars	VHS E-E	1) Adjust the oscilloscope's GAIN control so that signal level between the sync. tip and 100% white becomes of 4.0 scale divisions on the screen. 2) Adjust R39 to set the white clip for 3.6 scale divisions (190%), and R29 to set the dark clip for 2.0 scale divisions (150%).
		TP5 [0] [1]	R57 [0] [1] R69 [0] [1]	Pulse & bars	S-VHS E-E	3) In the same manner as above, set the level between the sync. tip and 100% white for 4.0 scale divisions by the GAIN control. 4) Adjust the white clip for 4.4 scale divisions (210%) by R69, while the dark clip for 2.8 scale dividions (170%) by R57.

REC MODE SW : VHS

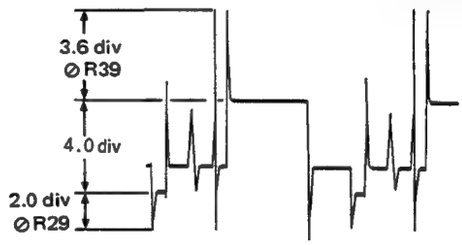

REC MODE SW : S-VHS

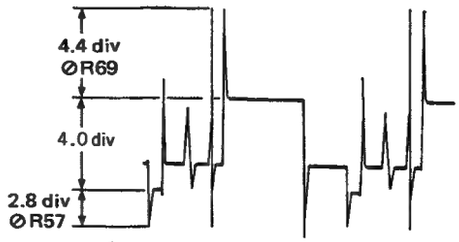

No.	Item	Check Point	Adjustment Parts	Signal	Mode	Description
17	Carrier & deviation	TP1 [0][1]	R164 [0][1] R163 [0][1]	Color bars	VHS E-E	1) Connect a carrier checker and an oscilloscope as shown left. It is recommended to use the oscilloscope in the DC coupling. 2) Set the carrier checker for the VHS mode and the DEVI/C. BAL switch to "DEVI". 3) Adjust R164 to align the sync tip with the lower marker, while R163 to align the 100% white portion to the upper marker. 4) Repeat the adjustment of R164 and R163 alternately until they meet the specifications at the same time.
		TP4 [0][1]	R68 [0][1] R66 [0][1]	Color bars	S-VHS E-E	5) Connect the carrier checker to TP4. 6) Set the carrier checker switch to S-VHS and DEVI. 7) Adjust R68 to align the sync tip with the lower marker, while R66 to align the 100% white portion to the upper marker. 8) Repeat the adjustment of R68 and R66 alternately until they meet the specifications at the same time.
		TP4 [0][1]	R53 [0][1]	No signal	S-VHS E-E	9) Set the carrier checker for the DEVI./C. BAL switch to "C. BAL", and the SELECT switch to "S-VHS". 10) Adjust R53 to minimize waveform at TP4.
		TP4 [0][1]	R68 [0][1] R66 [0][1]	Color bars	S-VHS E-E	11) Set the carrier checker for the DEVI./C. BAL switch to "DEVI" and the S-VHS mode. 12) Repeat the adjustments of the steps 5) through 8). 13) Confirm no overshoots and roundings in the waveform both for VHS and S-VHS modes.

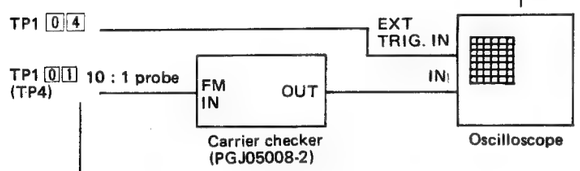

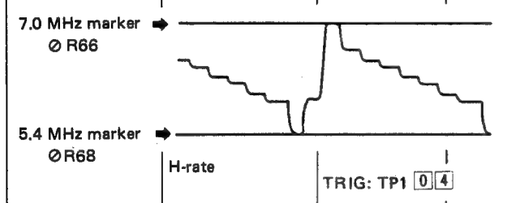

- **Location of check points and adjustment parts**

REC Y [0][1]

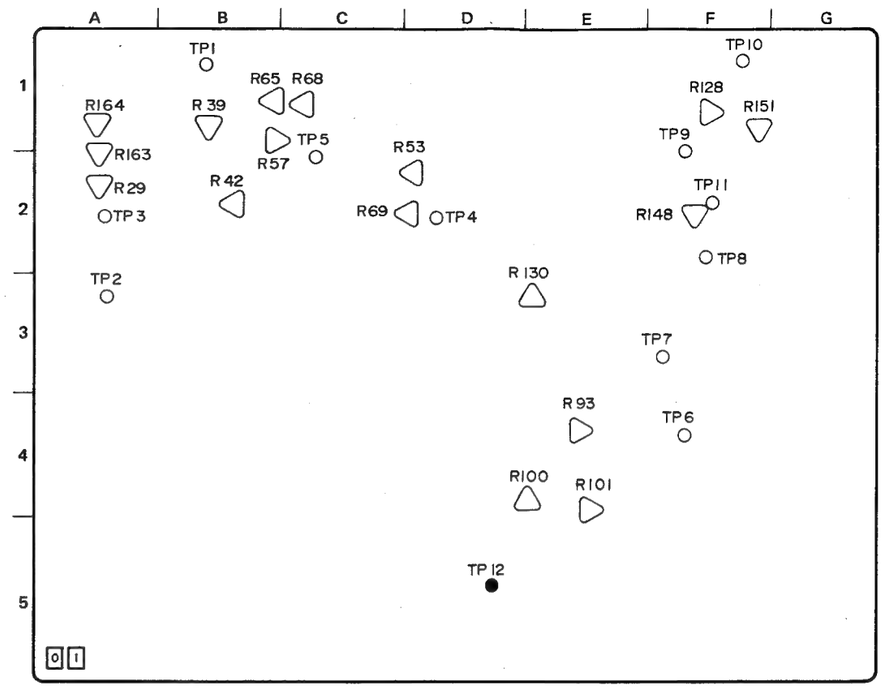

TP	1	2	3	4	5	6	7	8	9	10	11	12
Loc.	B1	A3	A2	D2	C2	F4	F3	F2	F2	F1	F2	D5

R	29	39	42	53	57	65	68	69	93	100	101	128	130	148	151	163	164
Loc.	A2	B1	B2	D2	B1	B1	C1	D2	E4	E4	E4	F1	E3	F2	F1	A1	A1

F2

Y/C SEPALATOR [0][4]

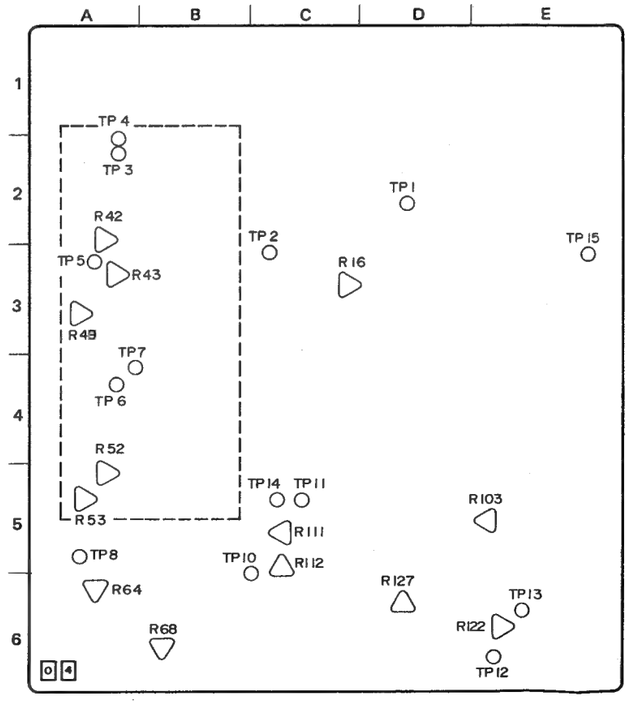

TP	1	2	3	4	5	6	7	8	10	11	12	13	14	15
Loc.	D2	C3	A2	A2	A3	A4	A4	A5	C5	C5	E6	E6	C5	E3

R	16	42	43	49	52	53	64	68	103	111	112	122	127
Loc.	C3	A2	A3	A3	A5	A5	A6	B6	E5	C5	C5	E6	D6

- **Location of check points and adjustment parts**

REC COLOR 6 6

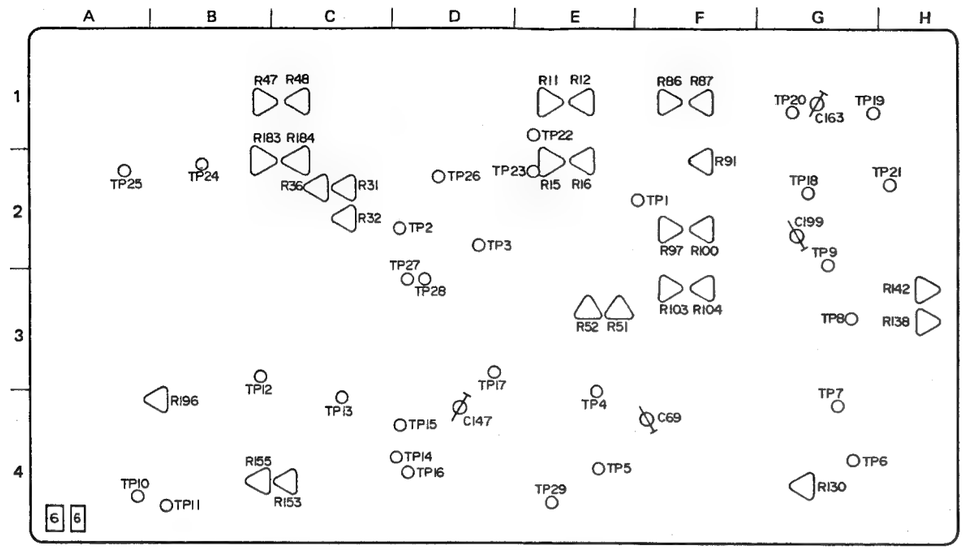

R	11	12	15	16	31	32	36	47	48	51	52	86	87	91	97	100	103	104	130	138
Loc.	E1	E1	E2	E2	C2	C2	C2	B1	C1	E3	E3	F1	F1	F2	F2	F2	F3	F3	G4	H3

R	142	153	155	183	184	196
Loc.	H3	C4	B4	B2	C2	B4

C	69	147	163	199
Loc.	F4	D4	G1	G2

TP	1	2	3	4	5
Loc.	F2	D2	D2	E4	E4

TP	6	7	8	9	10	11	12	13	14	15	16	17	18	19	20	21	22	23	24	25	26	27	28	29
Loc.	G4	G4	G3	G3	A4	B4	B3	C4	D4	D4	D4	D3	G2	G1	G1	H1	E1	E2	B2	A2	D2	D3	D3	E4

VIDEO PRE/REC AMP 0 5

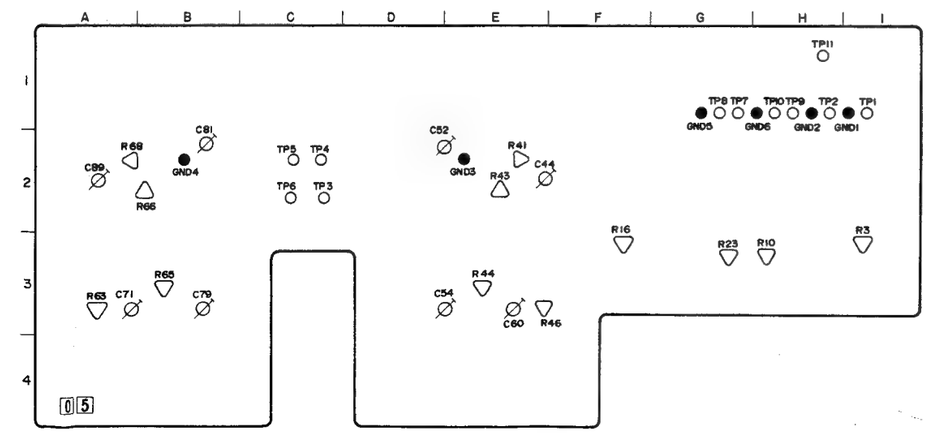

TP	1	2	3	4	5	6	7	8	9	10	11	G1	G2	G3	G4	G5	G6
Sect.	I1	H1	C2	C2	C2	C2	G1	G1	H1	H1	H1	I1	H1	E2	B2	G1	H1

R	3	10	16	23	41	43	44	46	63	65	66	68
Sect.	I3	H3	F3	G3	E2	E2	E3	E3	A3	B3	B2	A2

C	44	52	54	60	71	79	81	89
Sect.	E2	D2	D3	E3	A3	B3	B2	A2

No.	Item	Check Point	Adjustment Parts	Signal	Mode	Description
18	REC AFC	TP5 6 6 ↓ Frequency counter TP5 : 625 kHz ± 2 kHz	R130 6 6	No signal VIDEO INPUT SW : Y/C627	E-E	1) Adjust R130 so that frequency of TP5's signal becomes 625 kHz ± 2 kHz.
19	Burst gate phase width (1)	TP2 6 6	R155 6 6 R153 6 6	Color bars	E-E	1) Adjust R155 so that TP2's waveform starts to burst around the foot of the waveform. 2) Adjust R153 so that the waveform's burst ends around the foot of the waveform.
20	REC APC	TP4 6 6 ↓ Frequency counter TP4 : 4.435572 MHz ± 30 Hz	C69 6 6	Color bars	E-E	1) Use such a shorting lead A as shown below to make a shortcircuit between TP5 6 6 and TP29 6 6 . 2) Adjust C69 to obtain 4.435572 MHz ± 30 Hz as frequency of TP4's signal. 3) Remove the shorting lead A.
		TP15 6 6 ↓ Frequency counter TP15 : 4.433619 MHz ± 30 Hz	C147 6 6	Color bars	E-E	4) Shortcircuit TP16 6 6 and TP29 6 6 with a shorting lead B (shown below), while shortcircuit TP14 6 6 and TP29 6 6 with a shorting lead A as shown in the figure. 5) Adjust C147 so that frequency of TP15's signal becomes 4.433619 MHz ± 30 Hz. 6) Remove the shorting leads.
		TP20 6 6 ↓ Frequency counter TP20 : 4.433619 MHz ± 30 Hz	C163 6 6	Color bars	E-E	7) Use the shorting lead B to make a shortcircuit between TP18 6 6 and TP29 6 6. 8) Adjust C163 so that frequency of TP20's signal becomes 4.433619 MHz ± 30 Hz. 9) Remove the shorting lead B.

3-24

No.	Item	Check Point	Adjustment Parts	Signal	Mode	Description
21	Pilot burst gate pulse width	TP28 [6][6]	R142 [6][6] R138 [6][6]	Color bars	E-E REC MODE SW: S-VHS	1) Adjust R142 so that the burst center position A of TP28's signal is observed at 5.9 μsec point as shown in the figure. 2) Adjust R138 so that the width B of pilot burst is for 2.26 μsec as shown in the figure.
22	Pilot burst level & phase	TP28 [6][6]	R52 [6][6] C199 [6][6]	Color bars SW1 [6][6] : Left	S-VHS E-E	1) Connect an oscilloscope's CH-1 IN terminal to TP28 for amplification, while connect its CH-1 OUT terminal to a vectorscope's INPUT terminal. 2) Connect the vectorscope's EXT. CW terminal and a test signal generator for SC (Subcarrier) supply. 3) Adjust burst level and pilot burst level with R52. 4) Use the vectorscope's PHASE VR to adjust the burst phase for the normal. 5) Adjust C199 so that the pilot burst phase becomes 270 ± 1°.
		Same as above	R51 [6][6]	Color bars SW1 [6][6] : Right	E-E	6) Perform the same adjustment as the step 3) by use of R51. 7) After adjustment performed in the same manner as the step 4), confirm the pilot burst phase of 90 ± 10°.
			R196 [6][6]	SW1 [6][6] : Left		8) Set R196 to the full clockwise position.

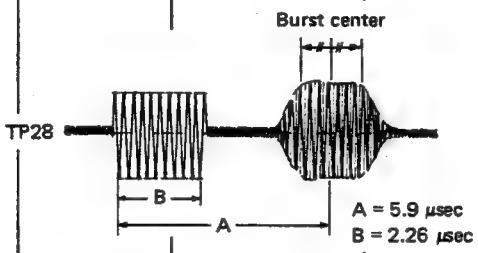

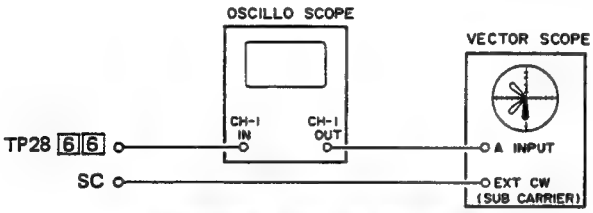

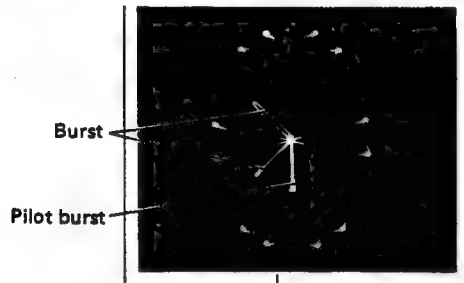

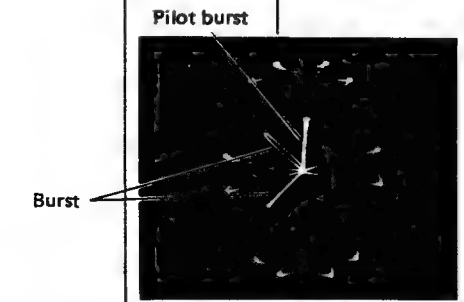

No.	Item	Check Point	Adjustment Parts	Signal	Mode	Description
23	REC Y/C delay	TP9 [0][1] TP26 [6][6]	R97 [6][6]	20T pulse	S-VHS E-E	1) On the oscilloscope set for "ADD" mode mix pulses from TP9 and TP26. 2) On the screen, make the base of the 20T pulse flat or symmetrical by R97. **For a Reference:** 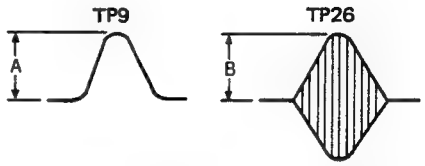 For easier adjustment, it is recommended to use the oscilloscope's GAIN control to equalize A and B before setting it for 'ADD' mode.
		TP7 [0][1] TP26 [6][6]	R103 [6][6]	20T pulse	VHS E-E	3) In the same manner as the above step 1), mix pulses of TP7 and TP26. 4) Adjust R103 to obtain the same result in the VHS mode as the step 2) above.
		TP9 [0][1] TP26 [6][6]	R86 [6][6]	Y/C 443 20T pulse	S-VHS E-E	5) With input of Y/C443 20T pulse, adjust R86 to obtain the same result as the step 2) above.
24	Y/C 627 REC Y/C delay	TP9 [0][1] TP26 [6][6]	R11 [6][6]	Y/C 627 20T pulse	S-VHS E-E	1) On the oscilloscope set for "ADD" mode, mix TP9 signal and TP26 signal. 2) Adjust R11 so that the base of the 20T pulse becomes flat or symmetrical.
		TP7 [0][1] TP26 [6][6]	R15 [6][6]	Y/C 627 20T pulse	VHS E-E	3) In the same manner as the step 1) above, mix TP7 and TP26 pulses on the oscilloscope. 4) Adjust R15 to obtain the same result as the step 2) above.

REC MODE SW : S-VHS

REC MODE SW : VHS

REC MODE SW : S-VHS

VIDEO INPUT SW : Y/C 443

REC MODE SW : S-VHS

VIDEO INPUT SW : Y/C627

REC MODE SW : VHS

VIDEO INPUT SW : Y/C627

No.	Item	Check Point	Adjustment Parts	Signal	Mode	Description
25	REC color level	TP1 [6][6] TP26 [6][6]	R91 [6][6] R100 [6][6]	Color bars	S-VHS E-E	1) Adjust R91 to obtain 0.4 Vp-p at TP1. 2) Adjust R100 to obtain 0.2 Vp-p at TP26.
		TP1 / TP26	R91 adjustment : 0.4 Vp-p R100 adjustment : 0.2 Vp-p		REC MODE SW : S-VHS	
		TP26 [6][6]	R104 [6][6]	Color bars	VHS E-E	3) Perform the same adjustment as the step 2) by R104.
		TP26	R104 adjustment : 0.2 Vp-p		REC MODE SW : VHS	
		TP1 [6][6]	R87 [6][6]	Y/C 443 color bars	S-VHS E-E	4) With input of Y/C443 color bars signal. 5) Perform the same adjustment as the step 1) by R87.
		TP1	R87 adjustment : 0.4 Vp-p		REC MODE SW : S-VHS	
					VIDEO INPUT SW : Y/C 443	
26	Y/C 627 REC color level	TP26 [6][6]	R12 [6][6]	Y/C 627 color bars	S-VHS E-E	1) Adjust R12 to obtain 0.2 Vp-p at TP26.
					REC MODE SW : S-VHS	
					VIDEO INPUT SW : Y/C627	
		Same as above	R16 [6][6]	Y/C 627 color bars	VHS E-E	2) Perform the same adjustment as the step 1) by R16.
					REC MODE SW : VHS	
					VIDEO INPUT SW : Y/C627	

No.	Item	Check Point	Adjustment Parts	Signal	Mode	Description
27	Head resonance freq. & Q	**Preparation and Precaution** (1) Proceed to adjust the following, load a blank cassette tape (on which no signal recorded) and play it back (for Normal Head adjustment) or do it in the Still mode (for Search Head adjustment). (2) Apply sweep signal whose sweep width is 100 kHz to 10 MHz without sync., and its amplitude should be set for the level not to distort its waveform at a test point (Use 1 : 1 probe; level 10 – 20 mV). For test pins to input the sweep signal and GND terminals, refer to the "Signal" column for each item. (3) Externally synchronize respective signals with composite sync. output of the sweep signal generator. At this time, supply the sync. signal through the SYNC IN terminal and set the following switches as follows. SYNC switch : EXT (PB) TBC PB mode : OFF STILL mode: ON If composite sync. signal is unavailable from the sweep signal generator used, refer to the next page. (4) Regarding TP11 [1][0] (D.FF), since its pulsing characteristic is different between at "H" level and "L" level, perform adjustment of the CH-1 head with sweep waveform when D. FF is "L", while the CH-2 head with that at "H" D. FF. (5) Prior to this adjustment, refer to the 'Precautions of the VIDEO PRE/REC AMP board adjustment' (on page 3-17).				
	1) Normal head	TP7 [0][5] GND5 [0][5]	R41 [0][5] C44 [0][5]	Sweep ↓ TP3 [0][5] GND3 [0][5]	PB	• **S-VHS mode, CH-1 head** (⊖SLOPE) 1) Shortcircuit TP11 [0][5] and TP3 [1][7] with such a shorting lead as shown below. R = 1 kΩ TP11 [0][5] o—/\/\/\—o TP3 [1][7] 2) Connect the oscilloscope to TP7 and GND5. 3) Adjust the 100 kHz signal level for 4.0 scale divisions by turning the GAIN control of the oscilloscope. At this time, adjust C44 and R41 to flatten the level between 8 MHz and 10 MHz (between 4.0 and 5.0 scale divisions). 4) Confirm that the minimum level lower than 8 MHz is more than 3.8 scale divisions. 5) Remove the shorting lead. Note: If R41 is turned only, it hardly affects the waveform.
		– S-VHS mode (common to Normal head & Search head) 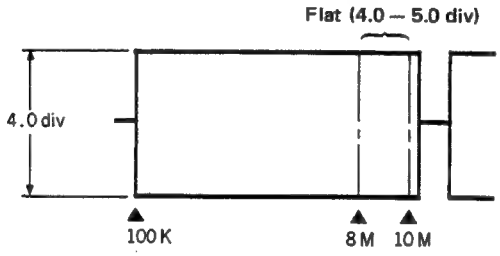 TRIG : TP11-[1][0] {⊕ slope: CH2 {⊖ slope: CH1				
		Same as above	C52 [0][5] R43 [0][5]	Same as above	Same as above	• **VHS mode, CH-1 head** (⊖ SLOPE) 6) Connect a shorting lead between TP11 [0][5] and GND. **Note:** The above step changes mode to VHS from S-VHS. 7) Turning the oscilloscope's GAIN control adjust the 100 kHz level for 2.0 scale divisions. At this time, also adjust C52 to set the max. amplitude (fo) to 4.9–5.1 MHz while adjust R43 to set the 5.0 MHz level (Q) between 3.9 and 4.1 scale divisions. 8) Remove the shorting lead connected in the step 5).
		– VHS mode (common to Normal head & Search head) 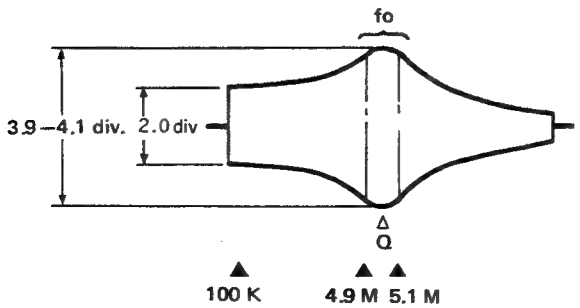 TRIG : TP11-[1][0] {⊕ slope: CH2 {⊖ slope: CH1				

No.	Item	Check Point	Adjustment Parts	Signal	Mode	Description
		TP8 [0][5] GND5 [0][5]	R46 [0][5] C60 [0][5]	Sweep ↓ TP4 [0][5] GND3 [0][5]	PB	• **S-VHS mode, CH-2 head** (⊕ SLOPE) 9) Perform the same adjustment as the step 3), 4) by R46 and C60.
		Same as above	R44 [0][5] C54 [0][5]	Same as above	Same as above	• **VHS mode, CH-2 head** (⊕ SLOPE) 10) Perform the same adjustment as the steps 5), 6) and 7) by C54 (fo adj.) and R44 (Q adj.).
	2) Search head	TP9 [0][5] GND6 [0][5]	R68 [0][5] C89 [0][5]	Sweep ↓ TP5 [0][5] GND4 [0][5]	STILL	• **S-VHS mode, CH-1 head** (⊖ SLOPE) 11) Perform the same adjustment as the step 3), 4) above by C89 and R68.
		Same as above above	R66 [0][5] C81 [0][5]	Same as above	Same as above	• **VHS mode, CH-1 head** (⊖ SLOPE) 12) Perform the same adjustment as the steps 5), 6) and 7) by C81 (for fo) and R66 (for Q).
		TP10 [0][5] GND6 [0][5]	R63 [0][5] C71 [0][5]	Sweep ↓ TP6 [0][5] GND4 [0][5]	Same as above	• **S-VHS mode, CH-2 head** (⊕SLOPE) 13) Perform the same adjustment as the step 3), 4) by C71 and R63.
		Same as above	R65 [0][5] C79 [0][5]	Same as above	Same as above	• **VHS mode, CH-2 head** (⊕ SLOPE) 14) Perform the same adjustment as the steps 5), 6) and 7) by C79 (for fo) and R65 (for Q).

• **If composite sync. signal is not available from the sweep signal generator used, perform adjustment without external sync signal input in the following conditions.**

(1) Set the switches as follows:
SYNC SW : VIDEO
TBC SW : OFF

(2) Other methods are the same as those with external composite sync. signal except on the following.

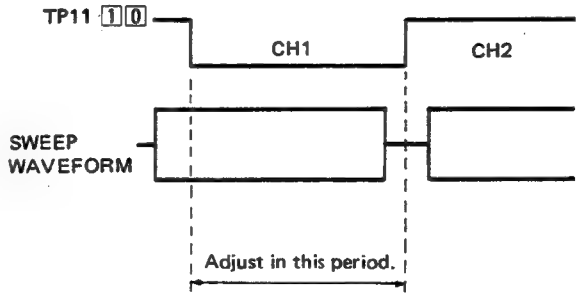

At this adjustment, connect the oscilloscope's probes to a specified test point and TP11[1][0](D.FF) for external triggering in order to observe waveforms in dual trace mode where sweep signal of the respective test point flows slowly on the screen.
For adjustment of the CH-1 head use sweep waveform in the same period as D. FF is of "L" level, while for the CH-2 head use that in the same period as D. FF is of "H" level.

No.	Item	Check Point	Adjustment Parts	Signal	Mode	Description
28	PB RF equalizer	TP3 [6][5]	CH1: R134 [6][7] CH2: R120 [6][7]	MBVE-3H	PB	1) Adjust the oscilloscope's GAIN control to set the 100 kHz signal level to be of 5 scale divisions on the screen. At the same time, adjust the 4.0 MHz signal level for 3.7 scale divisions. **Note:** For the alignment tape MBVE-3H, contact JVC.
		Same as above	CH1: R73 [6][7] CH2: R58 [6][7]	MBVE-3H	STILL	2) Perform the same adjustment as the step 1) with R73 and R58. **Note:** For the alignment tape MBVE-3H, contact JVC.
		TP8 [6][5]	CH1: R140 [6][7] CH2: R126 [6][7]	MH-8	PB	3) Adjust the 2.5 MHz signal level for 2.8 scale divisions referring to the 4.0 scale divisions for the 100 kHz signal. **Note:** When the level of 4.0 scale divisions cannot be obtained by the above manner, use R82 [6][5] to raise the level up. If this adjustment with R82 has been performed, repeat the steps 1) and 2) of the Item No. 41.
		Same as above	CH1: R79 [6][7] CH2: R64 [6][7]	MH-8	STILL	4) Perform the same adjustment as the step 3) with R79 and R64.

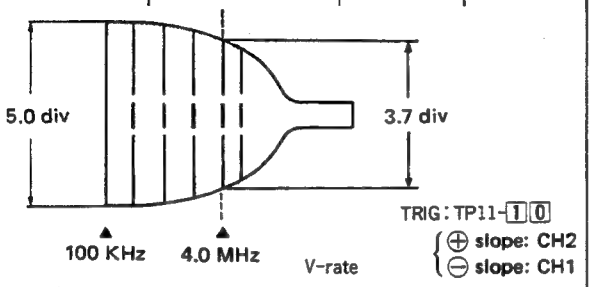

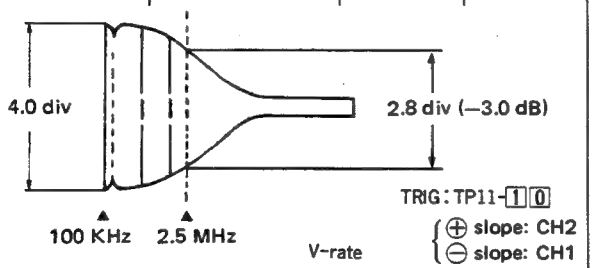

No.	Item	Check Point	Adjustment Parts	Signal	Mode	Description
29	PB color channel balance & level	TP25 [6][6] — S-VHS PB color level — 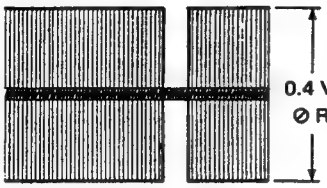 V-rate TRIG: TP11-[1][0]	R176 [6][7] R48 [6][6] A = B Ø R176 ⊕ slope: CH2 ⊖ slope: CH1	MH-2H (SP mode, color bars)	PB	1) With the alignment tape MH-2H being played back, adjust the TRACKING VR for the best tracking position. 2) Adjust R176 to equalize CH1 and CH2 color levels. 3) Adjust R48 to set the color level to 0.4 Vp-p.
		Same as above	R35 [6][7]	MH-2H (SP mode, color bars)	STILL	4) Adjust R35 to equalize CH1 and CH2 color levels. **Note:** Set the color levels according to an average result of 2–3 measurements at different STILL points.
		Same as above	R130 [6][7] R184 [6][6]	MH-2 (color bars)	PB	5) Adjust R130 to equalize CH1 and CH2 color levels. 6) Adjust R184 to set the color level to 0.4 Vp-p.
		Same as above	R69 [6][7]	MH-2 (color bars)	STILL	7) Adjust R69 to equalize CH1 and CH2 color levels.
30	REC FM level	TP3 [0][5] GND3 [0][5] 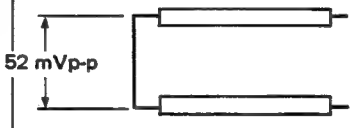 V-rate TRIG: TP11-[1][0]	CH1: R22 [6][7]	Color bars	VHS REC	1) Connect the oscilloscope's probe to TP3 and ground the other probe to GND3. 2) For CH1 adjust TP3's pedestal FM level for 52 mVp-p by R22.
		TP4 [0][5] GND3 [0][5] TRIG: TP11-[1][0]	CH2: R24 [6][7]	Color bars	VHS REC	3) For CH2 adjust TP4's pedestal FM level for 52 mVp-p by R24. **Note:** Repeat the steps 2) and 3) alternately until they meet the specifications at the same time.
		TP3 [0][5] GND3 [0][5] TRIG: TP11-[1][0]	CH1: R23 [6][7]	Color bars	S-VHS REC	4) For CH1 adjust TP3's pedestal FM level for 56 mVp-p by R23.
		TP4 [0][5] GND3 [0][5] TRIG: TP11-[1][0]	CH2: R25 [6][7]	Color bars	S-VHS REC	5) For CH2 adjust TP4's pedestal FM level for 56 mVp-p by R25.

No.	Item	Check Point	Adjustment Parts	Signal	Mode	Description
31	REC freq. characteristic	— REC frequency characteristic adjustment procedure —				

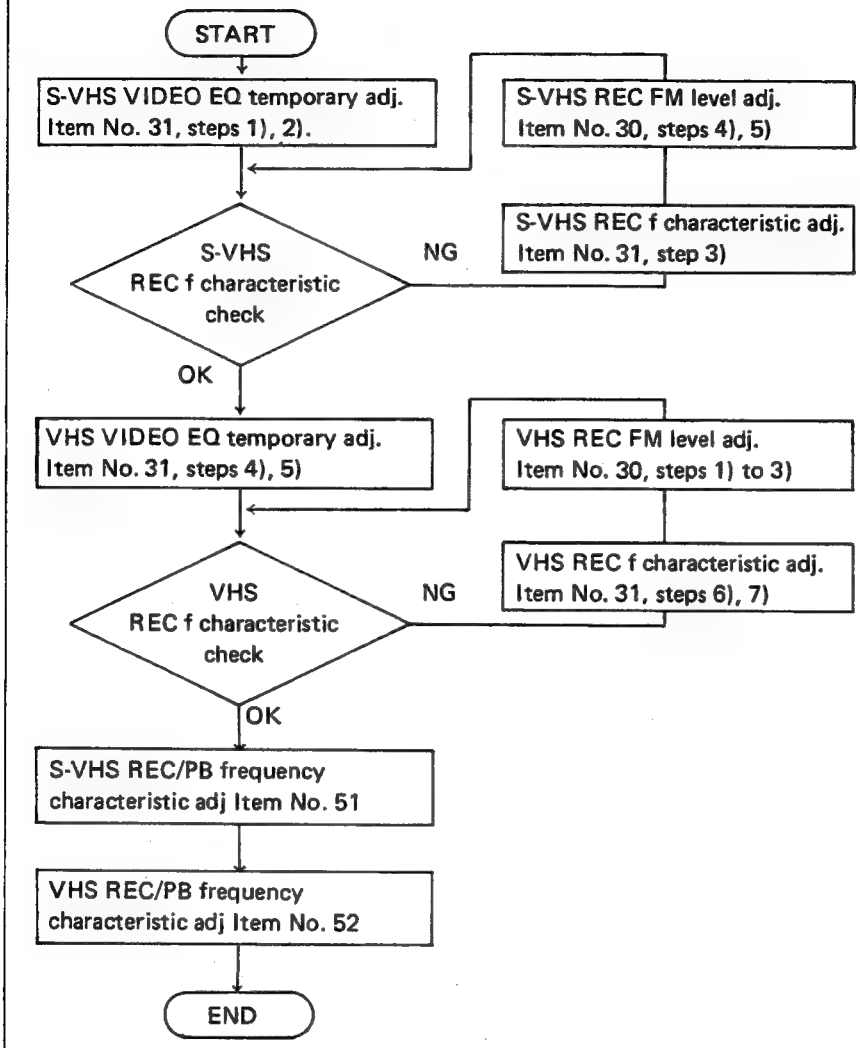

Y/C443 OUT (Pin 1 Pin 2: GND (75Ω terminated)	CH1: R18 [6] [5] CH2: R120 [6] [7]	MBVE-3H	S-VHS PB

Note: VRs for CH1 and CH2 are on different boards respectively.

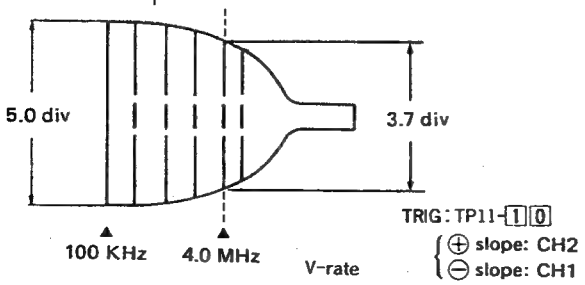

1) Adjust the oscilloscope's GAIN control to set the 100 kHz signal level to be of 5 scale divisions on the screen.
   At this time, adjust the 4.0 MHz signal level for 3.7 scale divisions by R18.
2) Confirm the CH2 signal level.
   If it is out of the specifications, adjust R120 to obtain the correct level.

Note: For the alignment tape MBVE-3H, contact JVC.

No.	Item	Check Point	Adjustment Parts	Signal	Mode	Description
31		Y/C 443 OUT Pin 1 Pin 2 : GND (75 Ω terminated)	CH1: R10 [0][5] CH2: R23 [0][5]	B/W sweep	S-VHS REC ↓ PB	3) Record the B/W sweep signal to play it back. Set the 100 kHz signal level for 5.0 scale divisions and, referring to it, confirm the 4.0 MHz signal level for 3.5 scale divisions for both channels. ● If the above value cannot be obtained: a) Roughly turn R23 or R10. CH1: R10 ↺ : decreases the 4.0 MHz level. R10 ↻ : increases the 4.0 MHz level. CH2: R23 ↻ : decreases the 4.0 MHz level. R23 ↺ : increases the 4.0 MHz level. b) Repeat the adjustments of the item No. 30, steps 4) and 5) for REC FM level. c) Repeat the step 3) of this item until they meet the specifications. **Note:** If REC frequency characteristic for S-VHS mode is adjusted, that for VHS mode is changed, too. Therefore, the following steps for VHS mode must take place after this adjustment.
		Same as above	CH1: R71 [6][5] CH2: R126 [6][7]	MH-8	VHS PB	4) Adjust the 2.5 MHz signal level for 3.7 scale divisions referring to the 5 scale divisions for the 100 kHz signal by R71. 5) Confirm the CH2 signal level. If it is out of the specifications, adjust R126 to obtain the correct level.
		Same as above	CH1: R3 [0][5] CH2: R16 [0][5]	Color sweep	VHS REC ↓ PB	6) Record the color sweep signal and play it back. 7) Set the 100 kHz signal level for 5.0 scale divisions, and referring to it, adjust the 2.5 MHz signal level for 3.7 scale divisions for both channels. ● If a satisfactory result cannot be obtained: a) Roughly turn R3 or R16. CH1: R3 ↻ : decreases the 2.5 MHz level. R3 ↺ : increases the 2.5 MHz level. CH2: R16 ↺ : decreases the 2.5 MHz level. R16 ↻ : increases the 2.5 MHz level. b) Repeat the adjustments of the item No. 30, steps 1), 2) and 3) for REC FM level. c) Perform the adjustments of the steps 6) and 7) of this item repeatedly until they meet the specifications.

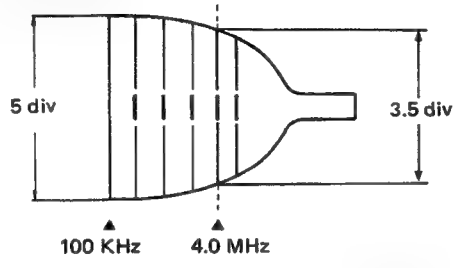

TRIG: TP11-[1][0]
⊕ slope: CH2
⊖ slope: CH1

V-rate

Note: VRs for CH1 and CH2 are on different boards respectively.

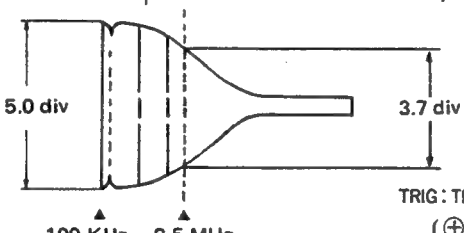

TRIG: TP11-[1][0]
⊕ slope: CH2
⊖ slope: CH1

V-rate

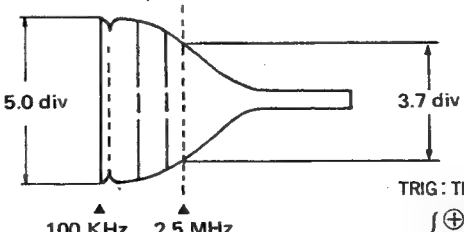

TRIG: TP11-[1][0]
⊕ slope: CH2
⊖ slope: CH1

V-rate

No.	Item	Check Point	Adjustment Parts	Signal	Mode	Description
32	S-VHS REC/PB color level	TP25 [6] [6] 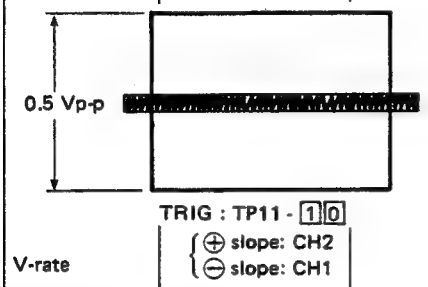 	CH1: R39 [6] [7] CH2: R37 [6] [7]	Color bars	S-VHS REC ↓ PB	**Note:** Before proceeding to this adjustment, confirm that adjustments of the item No. 29, steps 1) and 3) for 'PB color channel balance & level' have been completed. 1) Record the color bars signal and play it back. 2) Adjust R39 (CH1) and R37 (CH2) to set the color level to 0.5 Vp-p.
33	S-VHS Tracking meter	TRACKING METER 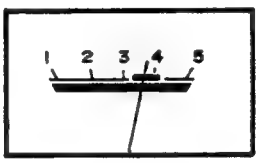 	R9 [6] [7]	Color bars	S-VHS REC ↓ PB	1) Record the color bars signal and play it back. 2) Set the TRACKING control to its center detent position. 3) Adjust the TRACKING meter so that it reads just 3.5 as seen from the front.
34	VHS REC/PB color level	TP25 [6] [6] 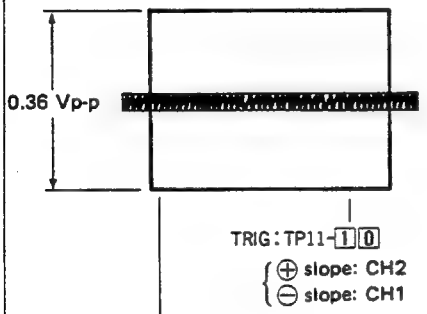 	CH1: R40 [6] [7] CH2: R38 [6] [7]	Color bars	VHS REC ↓ PB	**Note:** Before proceeding to this adjustment, confirm that adjustments of the item No. 29, steps 5) and 6) for 'PB color channel balance & level' have been completed. 1) Record the color bars signal and play it back. 2) Adjust R40 (CH1) and R38 (CH2) to set the color level to 0.36 Vp-p.
35	VHS Tracking meter check	TRACKING METER	R10 [6] [7]	Color bars	VHS REC ↓ PB	1) Record the color bars signal and play it back. 2) Set the TRACKING VR to the center detent position. 3) Adjust the TRACKING meter so that it reads 3.5 as seen from the front.
36	Video meter	VIDEO METER	R14 [6] [7]	Color bars	E-E	1) Adjust the VIDEO meter so that it points just the center of the green zone as viewed from the front.

No.	Item	Check Point	Adjustment Parts	Signal	Mode	Description
37	Under burst & pilot burst det.	TP17 [6][7] TP16 [6][7] ↓ Digital volt-meter TP17 : 2 V DC TP16 : 2 V DC	R164 [6][7] R156 [6][7]	Color bars	S-VHS E-E	1) Adjust R164 to obtain 2 V DC as the under burst det. level at TP17. 2) Adjust R156 to obtain 2 V DC as the pilot butst det. level at TP16.
38	VHS Limiter balance	TP1 [0][2]	R4 [0][2]	Grey scale	VHS E-E	1) Adjust R4 to minimize the carrier leak at the sync. tip of TP1 signal.
39	Demodulator gain	TP1 [0][2]	R3 [0][2]	Color bars	VHS E-E	1) Adjust R3 to obtain 0.22 Vp-p at TP1.
		TP2 [0][2]	R39 [0][2]	Color bars	S-VHS E-E	2) Adjust R39 to obtain 0.22 Vp-p at TP2.
40	VHS Color & B/W phase EQ	VIDEO OUT (75Ω terminated)	R77 [6][5] R98 [6][5]	2T pulse	VHS REC ↓ PB	1) Record the 2T pulse and play it back. 2) Adjust R77 to symmetrize the waveform of the 2T pulse at the bottom. 3) Shortcircuit TP18 [6][6] and TP21 [6][6] with such a shorting lead as shown below.
					REC ↓ PB	4) Record the 2T pulse and play it back. 5) Adjust R98 to symmetrize the 2T pulse's waveform at the bottom. 6) Remove the shorting lead.

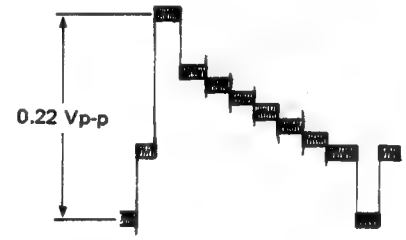

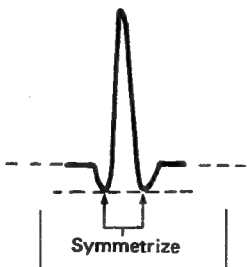

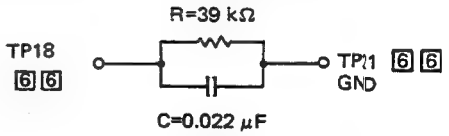

No.	Item	Check Point	Adjustment Parts	Signal	Mode	Description
41	VHS Color & B/W Y level	TP5 [6] [5]	R82 [6] [5]	Color bars	VHS E-E	1) Turn R58 [6] [5] fully counterclockwise. 2) Adjust R82 so that TP5's signal level between the sync. tip and the 100% white is 1.0 Vp-p.
		Same as above	R102 [6] [5]	Grey scale	VHS E-E	3) Shortcircuit TP18 [6] [6] and GND with such a shorting lead as shown below. 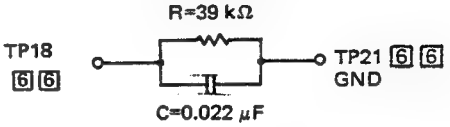 4) Adjust R102 so that TP5's signal level between the sync. tip and the 100% white is 1.0 Vp-p. 5) Remove the shorting lead. 6) R58 [6] [5] is subject to adjust in the later itme No. 82.
42	S-VHS Sub-deemphasis circuit power voltage	TP28 [6] [5] ↓ Digital voltmeter	R25 [6] [5] TP28 : 5.00 ± 0.02 V DC	Color bars	S-VHS E-E	1) Adjust R25 to obtain 5.00 ± 0.02 V DC at TP28.
		TP4 [6] [5]	R46 [6] [5]	Color bars	S-VHS E-E	2) Adjust R46 to obtain 0.4 Vp-p at TP4.
43	S-VHS Sub-deemphasis limiter balance	C29 [6] [5] (Plus lead) ↓ Digital voltmeter	R28 [6] [5] C29 : 3.48 ± 0.01 V DC	No signal	S-VHS E-E	1) Adjust R28 to obtain 3.48 ± 0.01 V DC at C29 (plus lead side).
44	S-VHS Y level	TP5 [6] [5]	R31 [6] [5]	Color bars	S-VHS E-E	1) Leave R16 [6] [5] as it is turned fully counterclockwise. 2) Adjust R31 to obtain 1.0 Vp-p as Y level at TP5. 3) R16 is subject to adjust in the later item No. 80.
45	DOC CCD(1) bias	TP13 [6] [5] TP19 [6] [5] TP14 [6] [5]	R114 [6] [5] R115 [6] [5]	Color bars	E-E	1) Set R114 to a position where DC level of TP13's FM signal is minimized. 2) Adjust R115 to obtain 2.7 V DC as the sync. tip level of DC potential at TP19. 3) Set the oscilloscope for 500 mV/div. in DC coupling and connect the probe to TP14. 4) By moving the oscilloscope's " ‡ " POSITION control, set DC voltage at TP14 on the center line of the oscilloscope screen. 5) Change connection of the oscilloscope to TP13 from TP14, and adjust R114 so that the DC potential of TP13's sync. tip is 0.35 V DC higher than the center line (TP14's level) of the screen.

No.	Item	Check Point	Adjustment Parts	Signal	Mode	Description
46	DOC level	TP11 [6][5] TP17 [6][5] : (INV) V-rate	R128 [6][5]	Color bars	S-VHS E-E	1) Connect CH-1 probe of the dual-trace oscilloscope to TP11 while CH-2 probe to TP17 (INV). 2) Mix the singals. Set CH1 and CH2 ranges to be equal. 3) Adjust R128 for minimum Y signal.
		Same as above	R134 [6][5]	2T pulse	S-VHS E-E	4) Adjust R134 so that the phase of TP17's waveform coincides with that of TP11's.
47	N.C. CCD(2) bias	TP15 [6][5] TP18 [6][5] TP16 [6][5]	R120 [6][5] R121 [6][5]	Color bars	E-E	1) Minimize DC level of TP15's signal by R120. 2) Adjust R121 so that DC potential of sync. tip of TP18's waveform becomes 2.7 V DC. 3) Set the oscilloscope for 500 mV/div. in DC coupling, and connect its probe to TP16. 4) Adjust the oscilloscope's " ↕ " POSITION control to position the DC potential of TP16 signal on the center line of the screen. 5) Change connection of the oscilloscope probe to TP15 from TP16, and adjust R120 so that the DC potential of TP15's sync. tip is 0.35 V DC higher than the center line (TP16's potential) on the screen.
48	Noise cancel	TP22 [6][5] TP20 [6][5] : (INV)	R140 [6][5]	Color bars	S-VHS E-E	1) Connect CH1 probe of the dual-trace oscilloscope to TP22 while CH2 probe to TP20 (INV). 2) Mix the signals. Set CH1 and CH2 ranges to be equal. 3) Adjust R140 for minimum Y signal.
		Same as above	R146 [6][5]	2T pulse	S-VHS E-E	4) Adjust R146 to coincide the phase of TP20's signal with that of TP22's.
		LINE OUT (75Ω terminated) ↓ Vectorscope	R161 [6][5]	Color bars	S-VHS E-E	5) Adjust R161 so that sway of the yellow signal's luminous point is minimized. 6) If there is still swaying, perform the chroma leak adjustment (Item No. 7). 7) Repeat the adjustment of the above step 5). 8) If there remains swaying after adjustments of the steps 5) to 7), again perform adjustments of R134 [6][5] and R146 [6][5] according to the item No. 46 step 4) and the step 4) of this item respectively.

No.	Item	Check Point	Adjustment Parts	Signal	Mode	Description
49	Video output linearity & DUB OUT level	VIDEO OUT (75Ω terminated) ↓ Waveform monitor 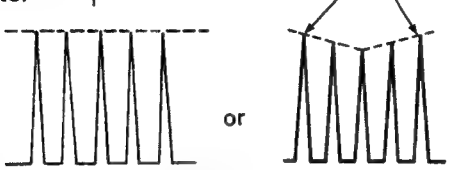	R117 [0] [2]	Stairstep (5 steps)	S-VHS E-E	1) Set the waveform monitor to "DIFF'D STEP' mode. 2) Turn R117 fully clockwise once, then, turn it slowly counterclockwise to set it at the position where the rightmost pulse and the leftmost pulse become the same in the level for the first time.
		VIDEO OUT (75Ω terminated) ↓ Waveform monitor	R110 [0] [2]	Stairstep (5 steps)	VHS E-E	3) Slowly turn R110 clockwise from the most counterclockwise position, and set it at the position where the rightmost pulse and the leftmost pulse become the same in the level for the first time.
		Y/C443 OUT Pin 1 Pin 2: GND (75Ω terminated) ↓ Waveform monitor	R129 [0] [2]	Color bars	S-VHS E-E	4) Adjust R129 to obtain 1.0 Vp-p as the output Y level.
			R82 [6] [5]	Color bars	VHS	5) Perform the same adjustment as the step 4) with R82.
			R102 [6] [5]	Grey scale	VHS E-E	6) Perform the same adjustment as the step 4) with R102.
		Y/C627 OUT (Pin 1 \Pin 2: GND (1 kΩ terminated) ↓ Waveform monitor	R181 [0] [2]	Grey scale	VHS E-E	7) Connect the Y/C627 OUT terminal and the waveform monitor, and adjust R181 to obtain 1.0 Vp-p as the output level.
50	Line Y OUT	VIDEO OUT (75Ω terminated) ↓ Waveform monitor	R152 [0] [2]	Color bars	S-VHS E-E	1) Adjust R152 so that VIDEO level is 1.0 Vp-p at OUTPUT Y level.
51	S-VHS REC/PB frequency characteristic 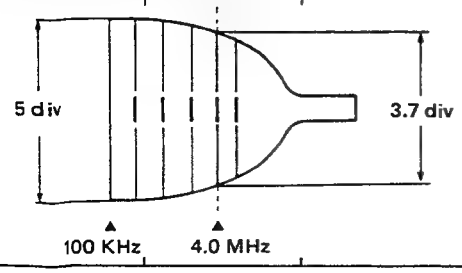	Y/C443 OUT Pin 1 Pin 2: GND (75Ω terminated)	R18 [6] [5]	B/W sweep 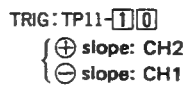	S-VHS REC ↓ PB	1) Record the B/W sweep signal and play it back. 2) Set the 100 kHz signal level to be 5 scale divisions on the oscilloscope screen, and referring to it, adjust the 4.0 MHz signal level for 3.7 scale divisions. If there is channel difference, adjust the 4.0 MHz level of the bigger channel for the 3.7 scale divisions.

No.	Item	Check Point	Adjustment Parts	Signal	Mode	Description
52	VHS REC/PB frequency characteristic	Y/C443 OUT (Pin 1 (Pin 2: GND (75Ω terminated)	R71 [6][5]	Color sweep	VHS REC ↓ PB	1) Record the color sweep signal and play it back. 2) Set the 100 kHz signal level for 5.0 scale divisions on the oscilloscope screen, adjust level of the 2.5 MHz signal for 3.7 scale divisions by turning R71. **Note:** If there is difference for the 2.5 MHz signal, adjust the bigger level for the specifications.
		Same as above	R90 [6][5]	B/W sweep	VHS REC ↓ PB	3) Perform the same adjustment as the step 2) with R90.
53	V. pulse width	VIDEO OUT (75Ω terminated) TP3 [0][2]	R93 [0][2] R89 [0][2]	Color bars	S-VHS REC ↓ PB ↓ STILL	1) Record the color bars signal and play it back. 2) Observe the playback signal in the Still mode by the Search Jog operation. 3) Adjust R93 so that the rise point of TP3's pulse is 2.5H before the fall point of the V. sync. signal. 4) Adjust R89 so that TP3's pulse width is 4H.
54	PB AFC	C74 [0][3] (upper side) L1 (PWB side) PB-C SUB ↓ Frequency counter	R90 [0][3] R13 PB-C SUB	No signal	S-VHS E-E	1) Adjust frequency at C74 (upper side) for the specified value (625 kHz ± 2 kHz) by R90. 2) Adjust frequency at L1 (PWB side) for the specified value (621 kHz ± 2 kHz) by R13.

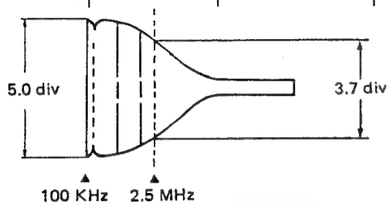

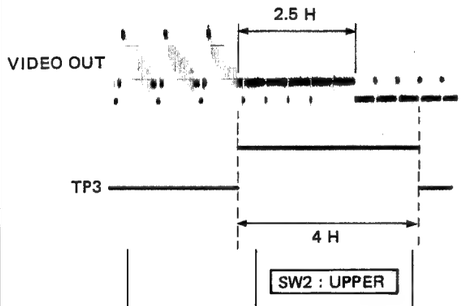

SW2 [0][2] : Upper side

SW2 [0][2] : Lower side

5) Set the SW2 [0][2] to the lower position and confirm that TP3's V. pulse is impressed.

VIDEO INPUT SW : Y/C627

C74 (upper side) : 625 kHz ± 2 kHz

L1 (PWB side) : 621 kHz ± 2 kHz

- **Location of check points and adjustment parts**

Y 2H DELAY [6][5]

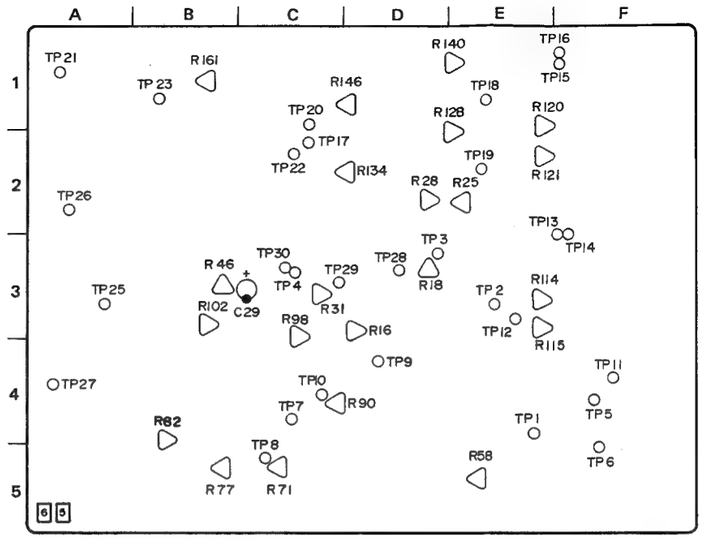

R	16	18	25	28	31	46	58	71	77	82	90	98	102	114	115	120	121	128	134	140	146	161
Loc.	D3	D3	E2	D2	C3	B3	E5	B5	B5	B4	C4	C3	B3	E3	E3	E1	E2	E2	D2	E1	D1	B1

C	29
Loc.	C3

TP	1	2	3	4	5	6	7	8	9	10	11	12	13	14	15	16	17	18	19	20	21	22	23	25	26	27	28	29	30
Loc.	E4	E3	D3	C3	F4	F5	C4	B5	D4	C4	F4	E3	F3	F3	F1	F1	C2	E1	E2	C1	A1	C2	B1	A3	A2	A4	D3	C3	C3

FM REC/PB [6][7]

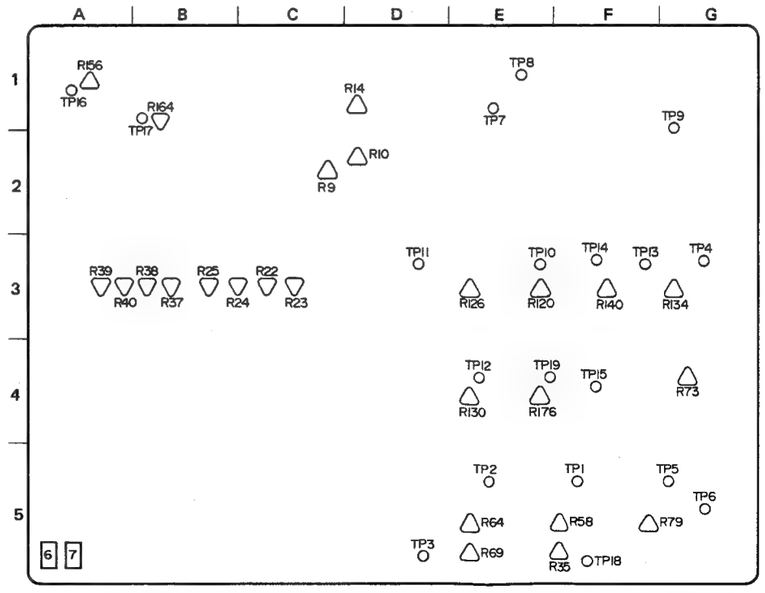

R	9	10	14	22	23	24	25	35	37	38	39	40	58	64	69	73	79	120	126	130	134	140	156	164	176
Loc.	C2	D2	D1	C3	C3	B3	B3	F5	B3	B3	A3	A3	F5	E5	E5	G4	F5	E3	E3	E4	G3	F3	A1	B1	E4

TP	1	2	3	4	5	6	7	8	9	10	11	12	13	14	15	16	17	18	19
Loc.	F5	E5	D5	G3	G5	G5	E1	E1	G1	E3	D3	E4	F3	F3	F4	A1	B1	F5	E4

- **Location of check points adjustment parts**

PB COLOR 0 3

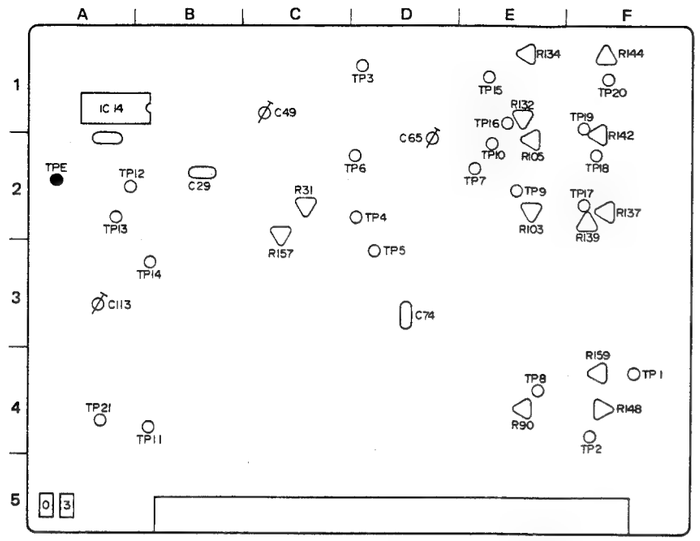

R	31	90	103	105	132	134	137	139	142	144	148	157	159
Loc.	C2	E4	E2	E2	E1	E1	F2	F2	F2	F1	F4	C2	F4

IC	14
Loc.	A1

C	29	49	65	74	113
Loc.	B2	C1	D2	D3	A3

TP	1	2	3	4	5	6	7	8	9	10	11	12	13	14	15	16	17	18	19	20	21	E
Loc.	F4	F4	D1	D2	D3	D2	E2	E2	E2	E2	B4	A2	A2	B3	E1	E1	F2	F2	F1	F1	A4	A2

CROSS TALK CANCEL 6 3

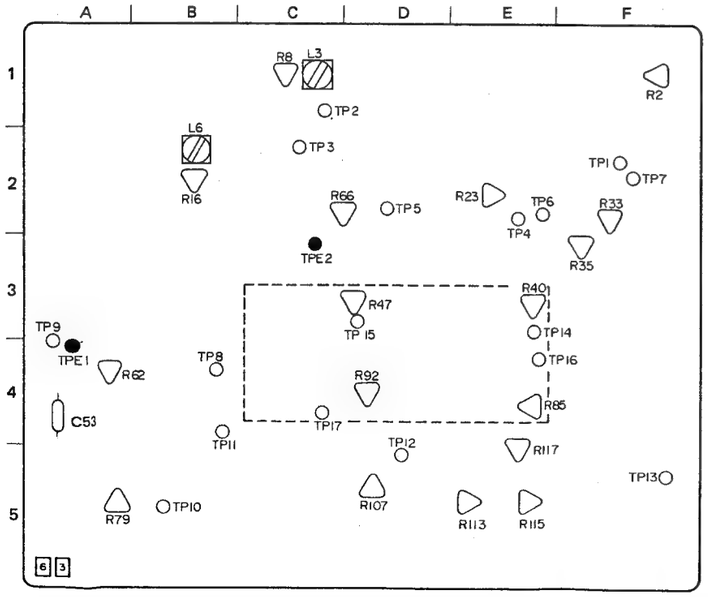

TP	1	2	3	4	5	6	7	8	9	10	11	12	13	14	15	16	17	E1	E2
Loc.	F2	C1	C2	E2	D2	E2	F2	B4	A4	B5	B4	D5	F5	E3	D3	E4	C4	A4	C3

L	3	6
Loc.	C1	B2

C	53
Loc.	A4

R	2	8	16	23	33	35	40	47	62	66	79	85	92	107	113	115	117
Loc.	F1	C1	B2	E2	F2	F3	E3	D3	A4	D2	A5	E4	D4	D5	E5	E5	E5

No.	Item	Check Point	Adjustment Parts	Signal	Mode	Description
55	Burst gate pulse width	TP13 0 3	R105 0 3 R103 0 3	Color bars	VHS REC ↓ PB	1) Record the color bars signal and play it back. 2) Adjust R105 to position the burst start at the foot of the TP13's waveform. 3) Adjust R103 to position the burst end at the foot of the TP13's waveform.
56	Sub carrier osc.	TP3 0 3 ↓ Frequency counter TP3 : 4.433619 MHz ± 5 Hz	C49 0 3	Color bars	S-VHS E-E	1) Adjust C49 so that frequency at TP3 is 4.433619 MHz ± 5 Hz.
57	APC	TP6 0 3 ↓ Frequency counter TP6 : 4.435572 MHz ± 30 Hz	C65 0 3	Color bars	S-VHS E-E	1) Shortcircuit TP5 0 3 and GND with such the shorting lead A while TP4 0 3 and GND with the shorting lead B. 2) Adjust C65 so that frequency at TP6 is 4.435572 MHz ± 30 Hz. 3) Remove both the shorting leads.
		TP14 0 3 ↓ Frequency counter TP14 : 4.433619 MHz ± 30 Hz	C113 0 3	Color bars	S-VHS E-E	4) Shortcircuit TP13 0 3 and GND with the shorting lead A while TP12 0 3 and GND with the shorting lead B. 5) Adjust C113 so that frequency at TP14 is 4.433619 MHz ± 30 Hz. 6) Remove both the shorting leads.
58	APC comp.	TP15 0 3 TP16 0 3	R134 0 3 R132 0 3	MH-2	PB	1) Play back the alignment tape MH-2. 2) Adjust R134 so that TP15's pulse width is 0.5 msec. 3) Adjust R132 so that TP16's pulse width is 0.5 msec.

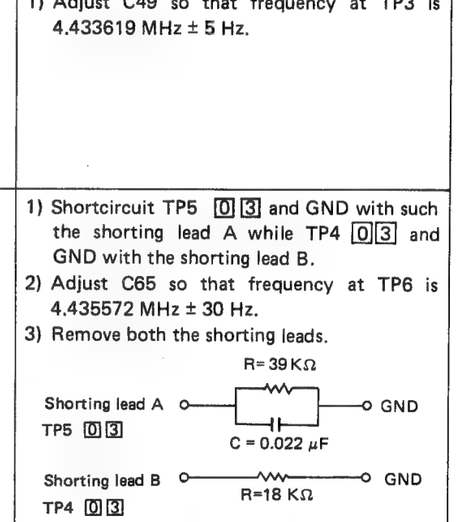

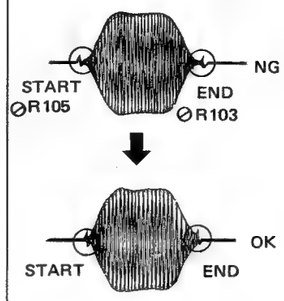

3-40

No.	Item	Check Point	Adjustment Parts	Signal	Mode	Description
59	DG compensator	VIDEO OUT (75Ω terminated) ↓ Waveform monitor	R31 [0] [3]	Mod. stair-step (5 steps)	VHS REC ↓ PB	1) Record the modulated 5-step stairstep signal and play it back. 2) Set the waveform monitor to "4.43 MHz BPF" mode. 3) Adjust R31 to flatten the waveform by the both (upper and lower) edges. **● Oscilloscope is used for this adjustment:** 1)'Terminate the Y/C443 OUT terminal (pin 5, pin 6: GND) with a 75-ohm resistor for observation by an oscilloscope. 2)'Trigger the oscilloscope to the Y signal (pin 1, pin 2 : GND). 3)'Observing the oscilloscope screen, perform the above step 3).
		Same as above	R157 [0] [3]	Mod. stair-step (5 steps)	S-VHS REC ↓ PB	4) Perform the same adjustment as the steps 1) to 3) with R157.
60	Pilot burst gate pulse width	TP5 [0] [3]	R139 [0] [3] R137 [0] [3]	Color bars	S-VHS E-E	1) Adjust R139 so that pilot burst starts at the foot of the waveform. 2) Adjust R137 so that pilot burst ends at the foot of the waveform.
		C29 [0] [3] (Left side) TP5 [0] [3]	–	Color bars	S-VHS E-E	3) Confirm that TP5's waveform is located at the same point as where the pilot burst is located.

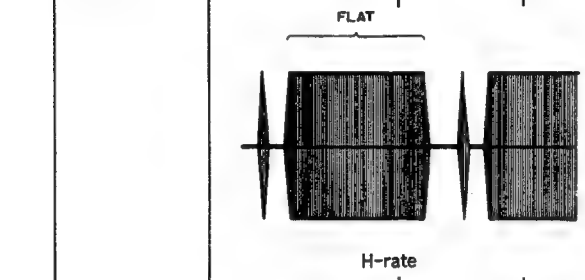

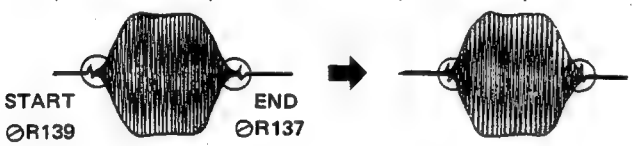

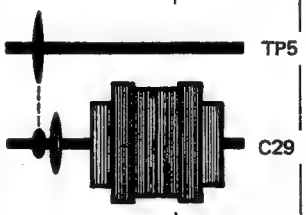

No.	Item	Check Point	Adjustment Parts	Signal	Mode	Description
61	Crosstalk cancel	TP1 TP2 [6] [3] TP3	R2 R8 L3 [6] [3] R16 L6	Color bars	S-VHS E-E	1) Adjust R2 to obtain 2.4 Vp-p as TP1's signal level. 2) Set the oscilloscope's both channel for 20 mV/div., AC coupling. 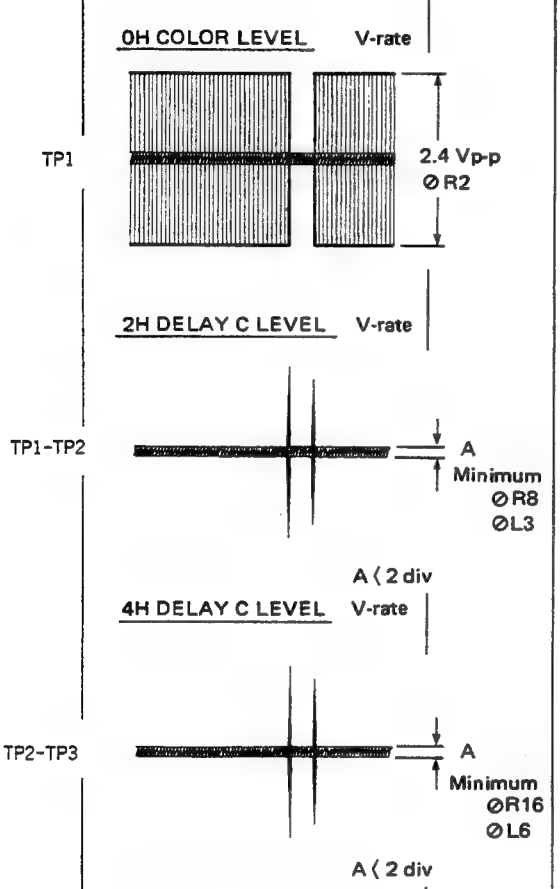 3) Subtract TP2's signal level from that of TP1 on the oscilloscope. TP1 TP2 "INV" ┐ "ADD" Use R8 and L3 to minimize chroma level. 4) In the same manner as the step 3), subtract TP3 from TP2 in signal levels, and minimize the chroma level by R16 and L6. TP2 TP3 "INV" ┐ "ADD"
62	CTC output color level	TP7 [6] [3]	R33 [6] [3]	Color bars	S-VHS E-E	1) Adjust R33 to obtain 1.0 Vp-p as color output level at TP7.
63	Crosstalk balance	TP5 [6] [3]	R35 [6] [3] R23 [6] [3]	Color bars	S-VHS E-E	1) Alternately adjust R35 and R23 to minimize chroma level of TP5's signal.
64	CTC CCD bias	C53 [6] [3] (upper side) TP12 [6] [3]	R40 R47 R85 R92 [6] [3]	Color bars	S-VHS E-E	1) Alternately adjust R40 and R47 to maximize signal level at C53 (upper side). 2) Alternately adjust R85 and R92 to maximize signal level at TP12.
65	Crosstalk cancel	TP13 [6] [3]	R62 R66 R79 [6] [3]	Color bars	S-VHS REC ↓ PB	1) Set R79 to the mechanical center position. 2) Adjust R62 and R66 repeatedly to minimize comb line forming at the top and bottom of the waveform as well as level fluctuation. 3) Use R79 to do the same adjustment as the above step 2).

No.	Item	Check Point	Adjustment Parts	Signal	Mode	Description
66	Y/C627 Pilot burst delete DC balance	TP13 [6][3]	R117 [6][3]	Color bars	S-VHS E-E Y/C627 OUT SW : VHS	1) Adjust R117 to even the burst level at the axis. 2) Confirm that there is no pilot burst observed.
		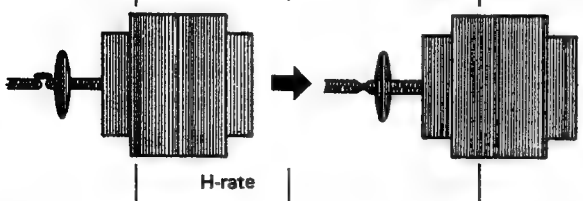 H-rate				
67	Y/C627 output color level	Y/C627 OUT (Pin 5 / Pin 6: GND (1 kΩ terminated)	R113 [6][3]	Color bars	S-VHS REC ↓ PB Y/C627 OUT SW: S-VHS	1) Recording the color bars signal and play it back. 2) Adjust R113 to obtain 0.9 Vp-p.
		Same as above	R115 [6][3]	Color bars	VHS REC ↓ PB Y/C627 OUT SW: VHS	3) Recording the color bars signal and play it back. 4) Adjust R115 to obtain 0.9 Vp-p. 5) After the adjustment, set the Y/C627 OUT switch to "S-VHS" position.
		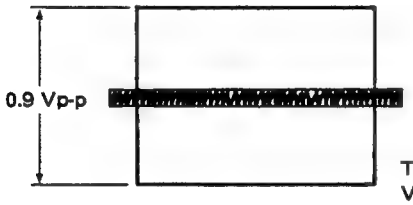 0.9 Vp-p TRIG : TP11 - [1][0] V-rate				
68	Pilot burst delete pulse width	TP2 [0][3]	R144 [0][3] R142 [0][3]	Color bars	S-VHS E-E	1) Turn R142 and R144 fully counterclockwise. 2) Adjust R144 to set the burst start point 0.5 μsec before the foot of the pilot burst. 3) Adjust R142 to set the burst end point 0.5 μsec before the foot of the pilot burst.
		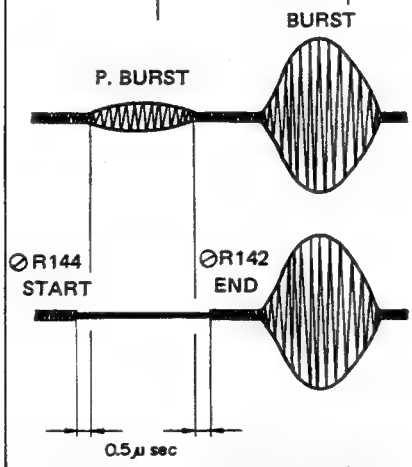 BURST P. BURST ⊘R144 START ⊘R142 END 0.5μ sec				
69	Pilot burst delete DC balance	TP2 [0][3]	R148 [0][3]	Color bars	S-VHS E-E	1) Adjust R148 to even the waveform of TP2's burst signal at the axis.
		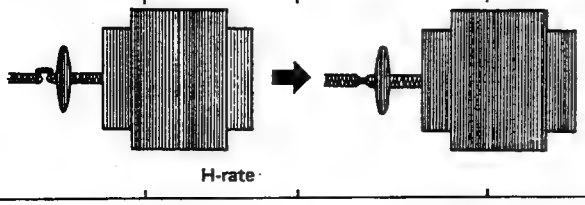 H-rate				

No.	Item	Check Point	Adjustment Parts	Signal	Mode	Description
70	Y/C443 Color output level	Y/C443 OUT (Pin 5 \Pin 6: GND (75Ω terminated) ↓ Vectorscope	R159 [0][3]	Color bars	S-VHS REC ↓ PB	1) Record the color bars signal and play it back. 2) With input of the reference color bars signal (EBU75%) to a vectorscope, adjust the vectorscope's GAIN control so that burst level crosses the scope's circumference. 3) Change the input signal to the vectorscope from the reference color bars signal to PB signal from the Y/C443 OUT. 4) Adjust R159 to equalize level of the luminous point of the burst signal with the level of the reference color bars signal.
71	90°/270° DET	IC14 pin 10 [0][3]	–	Color bars	S-VHS E-E SW1 [6][6]: Left side SW1 [6][6]: Right side SW1 [6][6]: Left side	1) Set SW1 [6][6] to the left side and confirm that the signal level is 9.0 to 11.0 V DC. 2) Set SW1 [6][6] to the right side and confirm that signal level is 0 V. 3) Return SW1 [6][6] to the left side.
72	VHS PB Y/C delay	VIDEO OUT (75Ω terminated)	R183 [6][6]	20T pulse	VHS REC ↓ PB	1) Record the 20T pulse and play it back. 2) Temporarily adjust R130 [0][2] so that the bottom portion of the 20T pulse is a little raised above the flat level. 3) Adjust R183 to symmetrize the 20T pulse at the bottom. **Note:** R130 [0][2] is subject to adjust in the later item No. 79.
73	VHS PB color level	TP25 [6][6] 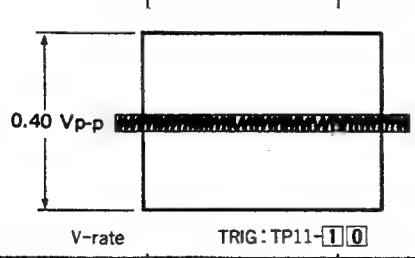	R184 [6][6]	MH-2	PB	1) Play back the alignment tape MH-2. 2) Adjust R184 to obtain 0.40 Vp-p at TP25.
74	S-VHS PB Y/C delay	VIDEO OUT (75Ω terminated)	R47 [6][6]	20T pulse	S-VHS REC ↓ PB	1) Record the 20T pulse and play it back. 2) Temporarily adjust R130 [0][2] so that the bottom portion of the 20T pulse is a little raised above the flat level. 3) Adjust R47 to symmetrize the 20T pulse at the bottom. **Note:** R130 [0][2] is subject to adjust in the later item No. 79.

No.	Item	Check Point	Adjustment Parts	Signal	Mode	Description
75	S-VHS PB color level	TP25 [6][6]	R48 [6][6]	MH-2H SP mode (color bars)	PB	1) Play back the alignment tape MH-2H. 2) Adjust R48 to obtain 0.40 Vp-p as the color level at TP25.
76	Y/C627 OUT Y/C delay	Y/C627 OUT (Pin 1, Pin 2: GND, Pin 5, Pin 6: GND) (1-kohm terminated)	R107 [6][3]	20T pulse	S-VHS REC ↓ PB	1) Record the 20T pulse and play it back. 2) On the oscilloscope screen, mix output waveforms of pin 1 and pin 5 of the Y/C627 OUT terminal. 3) Adjust R107 so that the base of the 20T pulse becomes flat or symmetrical.
77	E-E Y/C delay	VIDEO OUT (75Ω terminated)	R31 [6][6]	20T pulse	S-VHS E-E	1) Adjust R31 to symmetrize the 20T pulse at the bottom.
		Same as above	R32 [6][6]	20T pulse	VHS E-E	2) Adjust R32 to symmetrize the 20T pulse at the bottom.
78	E-E color level	TP25 [6][6]	R36 [6][6]	Color bars	S-VHS E-E	1) Adjust R36 to obtain 0.40 Vp-p as the color level at TP25.
79	Line output color level	VIDEO OUT (75Ω terminated) ↓ Vectorscope	R130 [0][2]	Color bars	S-VHS E-E	1) With input of the reference color bars signal (EBU75%) to a vectorscope, adjust the vectorscope's GAIN control so that burst level crosses the vectorscope's circumference. 2) Change the input signal to the vectorscope from the reference color bars signal to the VIDEO OUT signal. 3) Adjust R130 so that the burst signal's luminous point is on the vectorscope's circumference. 4) Adjust R130 to equalize level of the luminous point of the burst signal with the level of the reference color bars signal.

- **Location of check points and adjustment parts**

PB Y [0][2]

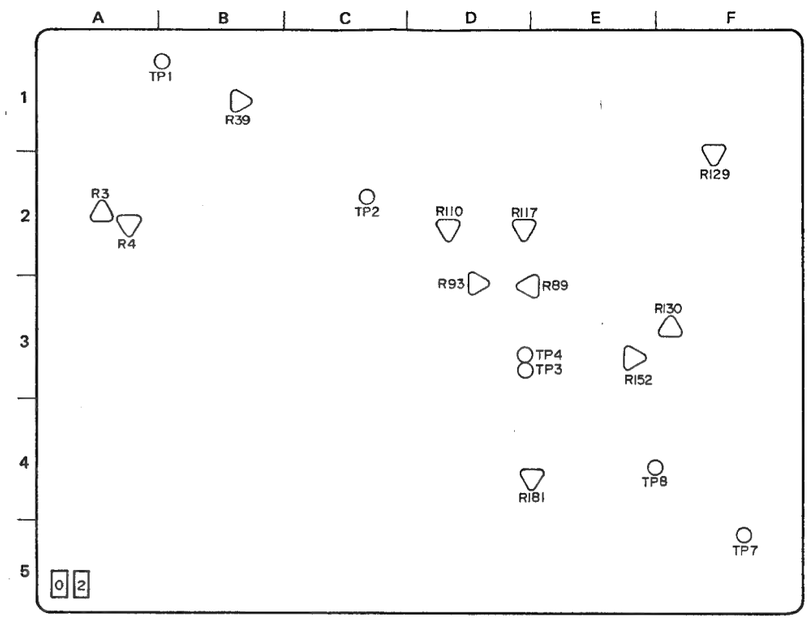

R	3	4	39	89	93	110	117	129	130	152	181
Loc.	A2	A2	B1	E3	D3	D2	D2	F2	F3	E3	E4

R	1	2	3	4	7	8
Loc.	B1	C2	D3	D3	F5	E4

RF 2H DELAY [3][7]

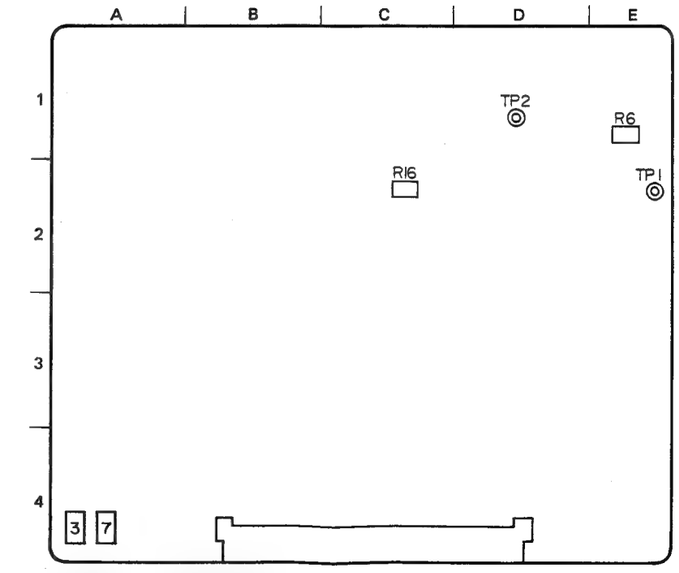

R	6	16
Loc.	E1	C2

TP	1	2
Loc.	E2	D1

No.	Item	Check Point	Adjustment Parts	Signal	Mode	Description
80	S-VHS sync. comp.	VIDEO OUT (75Ω terminated)	R16 [6][5]	100% White (Full flat field signal)	S-VHS REC ↓ PB	1) Record the 100% white signal and play it back. 2) Turning R16 clockwise from the counter-clockmost position, set it to the point where 0.3 Vp-p is obtained as the sync. level for the first time.
81	S-VHS RF output level	DOC RF OUT (75Ω terminated)	R6 [3][7]	Color bars	S-VHS REC ↓ PB	1) Record the color bars signal and play it back. 2) Adjust pedestal level of the FM waveform for 0.5 Vp-p. **Note:** If there is level difference between channels, set them for an average value.
82	VHS sync. comp.	VIDEO OUT (75Ω terminated)	R58 [6][5]	100% White (Full flat field signal)	VHS REC ↓ PB	1) Record the 100% white signal and play it back. 2) Turning R58 clockwise from the counter-clockmost position, set it at the point where 0.3 Vp-p is obtained as the sync. level for the first time.
83	VHS PB FM level	DOC RF OUT (75Ω terminated)	R16 [3][7]	Color bars	VHS REC ↓ PB	1) Record the color bars signal and play it back. 2) Adjust pedestal level of the FM waveform for 0.5 Vp-p. **Note:** If there is level difference between channels, set them for an average value.

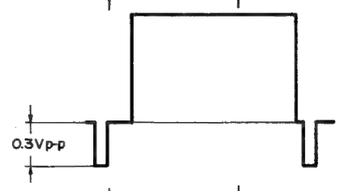

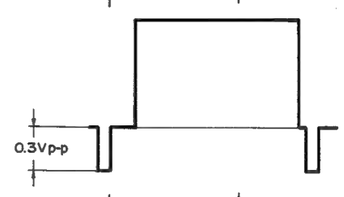

3-46

SECTION 4
DIAGRAMS AND CIRCUIT BOARDS

■ FOREWORD

1. Expression of connector

Connector is expressed in two ways.

1) The following illustrates 'CN2 pin 1' for example.

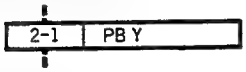

2) The following illustrates 'CN1 pins 1 and 2'.

2. Expression of wiring

As the following circuit diagram is divided to print on some sheets, such an indication as the following is found in the case the wiring extends over two or more divided sections.

1) Circuit diagram divided into two or more sections:

Board No.	Board Name	Number of divided sections
07	FM AUDIO	2 (1/2 – 2/2)
09	V. ERS & FMA PRE	2 (1/2 – 2/2)
10	SERVO 1	2 (1/2 – 2/2)
12	SYSCON	2 (1/2 – 2/2)
14	DRIVER	3 (1/3 – 3/3)
29	REAR	3 (1/3 – 3/3)
–	OVERALL	2 (1/2 – 2/2)

2) Indication of wiring which extends to another section:

(Example)

On the "3/3" diagram of DRIVER board, such an indication as the following is found on the REEL SERVO DEAD signal line.

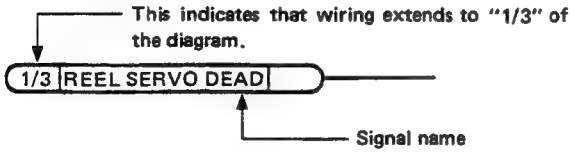

In the above case, the end of the wiring is connected to the "1/3-REEL SERVO DEAD" on the 1st section of the diagram.

3. Wiring of connector

(Example)

In the above example, CN1 is connected with CN2 on 1 2 SYSCON board.

- When connector is connected to 1 6 MOTHER board, its further connection (Board No. and Symbol No. of the other connector) is shown in the "Wiring Table".

4. Signal flow on the diagram

The following arrow marks indicate the specified signal paths respectively.

- ➡ : RECORDING or EE signal path
- ⇨ : PLAYBACK signal path
- ➡ : REC/PLAY signal path

On diagrams of the video system, signal flow is shown in different color by mode.

	Mode	Line indicating signal flow
LINE IN	S-VHS	BLUE line
	VHS only	Dotted BLUE line
Y/C 627 IN only	S-VHS	GREEN line
	VHS only	Dotted GREEN line

Note: Where blue line falls on other line(s), the line is colored in blue.
Where green line falls on dotted green line, the line is straight in green.

5. Measurement of voltage and waveform

1) Voltage
Measured by digital voltmeter in REC mode.
Value in ( ) shows voltage in S-VHS PB mode, and it is indicated only in the case PB voltage is different from that in REC.

2) Waveform
Video: Unless otherwise indicated, (a) color bars signal input through LINE IN terminal in REC in S-VHS mode, (b) color bars signal of MH-2H alignment tape in PB.
Audio: (a) 1 kHz/–6 dBs sine wave in REC, (b) 1 kHz segment of alignment tape in PB.

6. Unit of value

Unless otherwise specified:

1) Resistance is in Ω (1/6W, 1/8W)
2) Capacitance in μF
3) Inductance in μH
4) Screened parts (in ▩) are important for safety assurance. When replacing them, use specified parts.

4.1 KEY TO ABBREVIATIONS

A	ACC	: Automatic Color Control
	ADD	: Adder
	ADC	: Analog to Digital Converter
	ADJ	: Adjustment
	A DUB	: Audio Dubbing
	AE	: Audio Erase
	AEF	: Automatic Edition Function
	AFC	: Automatic Frequency Control
	AFT	: Automatic Fine Tuning
	AGC	: Automatic Gain Control
	AH	: Audio Head
	AL	: After Loading
	ALC	: Automatic Level Control
	ALM	: Alarm
	AM	: Amplitude Modulation
	AMP	: Amplifier
	ANT	: Antenna
	APC	: Automatic Phase Control
	APL	: Average Picture Level
	ASSEM	: Assembly
	ASS'Y	: Assembly
	ATT	: Attenuator
	AUTO	: Automatic
	AUX	: Auxiliary
	AUD	: Audio
B	B	: Brake
	BAL	: Balance
	BATT	: Battery
	BCD	: Binary Coded Decimal
	BEG	: Beginning
	BFP	: Burst Flag Pulse
	BIT	: Binary Digit
	BLK	: Black
	BLU	: Blue
	BNC	: Bayonet connector
	BPF	: Bandpass Filter
	BRN	: Brown
	BRT	: Brightness
	B. SOL	: Brake Solenoid
	B/W	: Black and White
C	C	: Ceramic
	CAP	: Capstan
	CASS	: Cassette
	CF	: Ceramic Filter, color Frame
	CC	: Cassette compartment
	CE	: Chip Enable
	CH	: Channel
	CHROMA	: Chrominance
	CLK	: Clock
	CLR	: Clear
	CMD	: Command
	CNT	: Count, Counter
	CONV	: Converter
	COL	: Color
	COM	: Common
	COMP	: Comparator Composite Compensation
	CONN	: Connector
	CT	: Ceramic Trap
	CTC	: Crosstalk Cancel
	CTL	: Control
D	D	: Drum
	DAC	: Dighta1 to Analog Converter
	DD	: Direct Drive
	DEC	: Decoder
	DEMOD	: Demodulator
	DET	: Detector
	DEV	: Deviation
	DFRS	: Drum Free RUN STOP
	DIF TRANS	: Differential Transformer
	DISCR	: Discriminator
	DL	: Delay Line
	DOC	: Dropout Compensator
	DRUM FF	: Drum Flip Flop
	DUB	: Dubbing
E	E	: Edit, Erase
	EDP	: Electronic Data Processing
	E-E	: Electric to Electric
	EF	: Emitter-Follower
	EMPHA	: Emphasis
	EMG	: Emergency
	ENC	: Encoder
	EN	: Enable
	EQ	: Equalizer
	ESNS	: End Sensor
	EXP	: Expander
	EXT	: External
F	FE	: Full Erase
	FF	: Fast Forward Flipflop
	FG	: Frequency Generator
	FM	: Frequency Modulation
	FMA	: FM Audio
	FREQ	: Frequency
	F-V CONV	: Frequency to Voltage Converter
	FWD	: Forward
G	GDL	: Grass Delay Line
	GEN LOCK	: Generator Lock
	GND	: Ground
	GRN	: Green
	GRY	: Gray
H	H	: High, Horizontal
	HG	: Hall Generator
	HPF	: Highpass Filter

I	IF	: Intermediate Frequency
	IFT	: Intermediate Frequency Transformer
	IND	: Indicator
	INH	: Inhibit
	INS	: Insert
	INT	: Internal, Interrupt
	INV	: Inverter
	I/O	: Input/Output
L	L	: Low
	LB	: Low Band
	LCD	: Liquid Crystal Display
	LE	: Loading End
	LED	: Light Emitting Diode
	LIN	: Linearity
	LIM	: Limiter
	LOAD	: Loading
	LP	: Long Play
	LPF	: Lowpass Filter
	LT	: Loading Tension
M	MAX	: Maximum
	MDA	: Motor Drive Amplifier
	MIC	: Microphone
	MIN	: Minimum
	MIX	: Mixer
	MM	: Monostable Multivibrator
	MOD	: Modulator
	MON	: Monitor
	MOS	: Metal Oxide Semkonductor
	MPX	: Multiplexer
	MS	: Mode Select
	MUT	: Muting
N	NC	: Noise Cancel
	NFB	: Negative Feedback
	NO	: Normally Open
O	OPAMP	: Operational Amplifier
	OP	: Operation
	ORN	: Orange
	OSC	: Oscillator
P	PB	: Playback
	PC	: Photocoupler
	PCM	: Pulse Code Modulation
	PGM	: Program
	PG	: Pulse Generator
	PI	: Photo Interrupter
	PLL	: Phase Locked Loop
	POS	: Position
	PR	: Pinch Roller
	PREV	: Preview
	PRL	: Preroll
	PU	: Pickup
	PWB	: Printed Wiring Board
Q	Q	: Quality Factor
R	RA	: Resistor Array
		: Random Access
	RAM	: Random Access Memory
	REC	: Recording
	REG	: Regulated
	REV	: Reverse
	REW	: Rewind
	RF	: Radio Frequency
	RST	: Reset
	R/P	: Record/Playback
	RPT	: Repeat
	RT	: Rotary Transformer
	RY	: Relay
S	S	: Search, Servo
	SC	: Subcarrier
	SEAR	: Search
	SEL	: Select
	SENS	: Sensor
	SEP	: Separator
	SF	: Source Follower
	SFF	: Short Fast Forward
	SFWD	: Search Forward
	SI	: Serial In
	SIG	: Signal
	SO	: Serial Out
	SOL	: Solenoid
	SOS	: Sound on Sound
	SP	: Standard Play
	SR	: Supply Reel
	SREV	: Search Reverse
	SREW	: Short Rewind
	SSG	: Sync Signal Generator
	STL	: Still
	SUP	: Supply
	SYNC	: Synchronization
	SYSCON	: System control
T	TBC	: Time Base Corrector
	TC	: Tension Control, Time Code
	TDG	: Time Date Generator
	T. EALM	: Tape End Alarm
	TEN	: Tension
	TIM	: Timing
	TK	: Tracking
	TL	: Time Lapse
	TREC	: Timer Record
	TSW	: Time Switch
	TU	: Take-up
	TUR	: Take-up Reel
U	UNLD	: Unloading
	UNREG	: Unregulated
	UNSW	: Unswitched
V	V	: Video, Vertical
	VCO	: Voltage Controlled Oscillator
	VD	: Vertical Drive
	VXO	: Variable Crystal Oscillator
	VLT	: Violet
	VSCH	: Variable Search
W	WHT	: White
	WV	: Working Voltage
	WARN	: Warning
X	XTL	: Crystal
Y	Y	: Luminance
	YLW	: Yellow

4.2 REPLACING SUBMINATURE "CHIP" PARTS

1. General description

Some of resistors, variable resistors, shorting jumpers (0 Ω resistors), ceramic capacitors, transistors, diodes are chip parts. Those removed once cannot be used again.

2. Replacement of chip parts

Replacement of chip parts should be performed as follows. Use a soldering iron (17 W for 260–30°C approx.) that has sharp-pointed tip and high performance in insulation.
It is more convenient to use a soldering iron with solder absorber (55 W approx.).

(1) Soldered condition of chip parts

- Resistors, capacitors, etc.

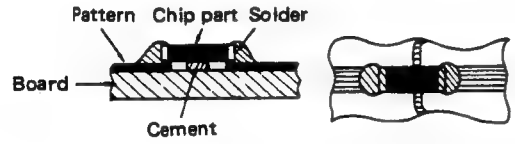

- Transistors, diodes, etc.

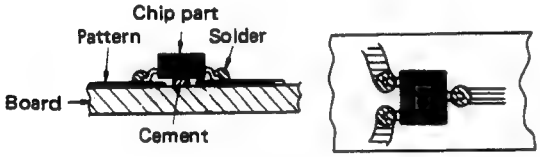

(2) Removing of chip parts

- Resistors, capacitors, etc.

i) Melt solder at a side.

ii) Holding the chip with tweezers, melt solder at the other side.

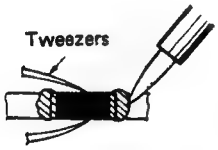

iii) Take off the chip in twisting and sliding motion.

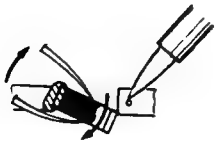

- Transistors, diodes, etc.

i) Melt solder at the side of single lead.

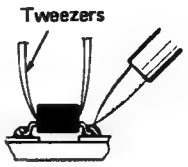

ii) Lift the unsolderd side upwards.

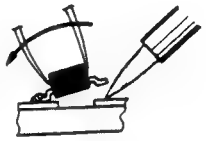

iii) Simultaneously melt solder at two leads of the other side and pull up the chip.

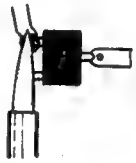

(3) Preheating and soldering of chip parts

Except transistors, make sure to preheat all chip parts, capacitors in particular, with a hot wind of 150°C approx. (of a hair dryer, etc.) for 2 minutes just before soldering, and immediately solder by a soldering iron of approx. 30 W.

(4) Attaching of chip parts

i) Heap up a proper amount of solder beforehand.

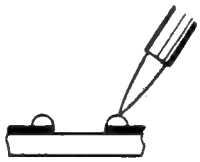

ii) Holding down a new chip by tweezers, solder it to the board by a soldering iron to melt solder from its lower part to the upper part (in the direction shown by a big arrow).

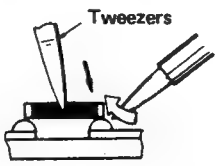

Note:
- Don't heat chip parts over 3 seconds.
- Don't rub electrodes.
- Don't use chip parts which were once removed.
- No cement is required.

3. Shapes of transistors & diodes

- Transistors

NAME	Imprinting	Shape No.
DTA114EK	14	2
DTA114YK	54	2
DTA124EK	15	2
DTA144EK	16	2
DTC114EK	24	1
DTC124EK	25	1
DTC144EK	26	1
DTC323TK	H02	1
FMG2	G2	3
FMS1	S1	4
FMW1	W1	5
IMD2	D2	7
IMX1	X1	6
IMZ1	Z1	7
IMZ2	Z2	8
2SA1022C	EC	9
2SB709	AO-AT	9
2SB709(R)	AR	9
2SC2412K(RS)	BR,BS	9
2SC2412KL(E)	LE	9
2SC2412KL(SE)	LS, LE	9
2SC2778C	KC	9
2SC4081(QR)	BQ, BR	9
2SD601	YO-Y1	9
2SD601(R)	YR	9
2SD601A	ZQ-ZS	9
2SK208(O)	J0	10
2SK621	30	10

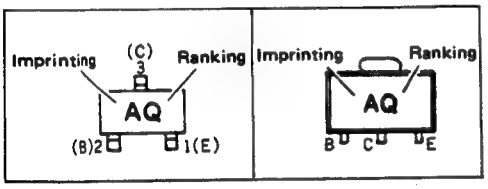

Note ; ( ) refers to Transistor rank.

- Diodes

NAME	Imprinting	Shape No.
DAN202K	N	11
DAP202K	P	12
DA204K	K	14
RB400D	D3A	13
MA3075(M)	7.5M	13
IMN10	N10	13

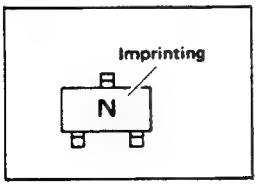

- Shapes

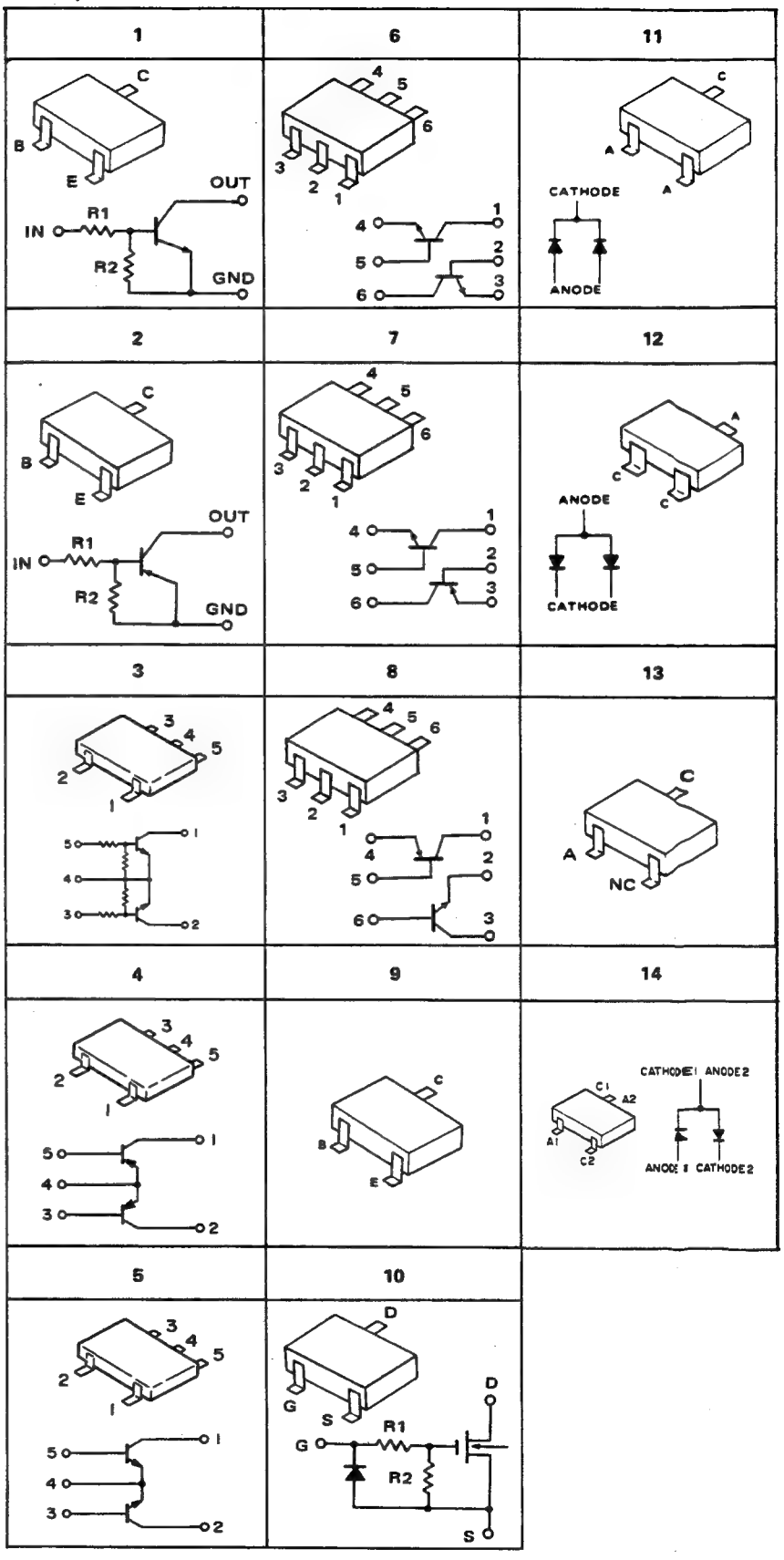

4.3 CIRCUIT BOARD LOCATIONS

- **Index to board by kind of diagram**

Board No.	Board Name	Page of Diagram			
		Block Diagram	Schematic Diagram	Circuit Board	Parts List
01	REC Y	4-8	4-24	4-25	6-6
02	PB Y	4-11	4-30	4-31	6-9
03	PB COLOR	4-14	4-34	4-35	6-13
04	Y/C SEPARATOR	4-9	4-26	3-27	6-16
05	VIDEO PRE/REC AMP	4-17	4-40	4-41	6-19
06	FULL ERASE HEAD	—	4-85	4-86	6-21
07	FM AUDIO	4-18	4-44, 49	4-45	6-21
08	NORMAL AUDIO	4-19	4-46	4-47	6-25
09	VIDEO ERASE & FM AUDIO PREAMP	4-18	4-48	4-48	6-29
10	SERVO 1	4-21	4-50	4-51	6-30
11	SERVO 2	4-22	4-54	4-55	6-35
12	SYSCON	4-23	4-58,59	4-60,61	6-38
13	END SENSOR	—	4-85	4-86	6-40
14	DRIVER	4-23	4-62,63,64	4-65	6-40
15	LED	—	4-85	4-86	6-42
16	MOTHER	—	4-82	4-83	6-42
17	REGULATOR	—	4-66	4-67	6-43
18	CASSETTE HOUSING	—	4-85	4-86	6-44
19	OPERATION 1	4-23	4-68	4-69	6-44
20	OPERATION 2	4-23	4-70	4-71	6-44
21	TERMINAL	—	4-84	4-86	6-45
22	SELECT SWITCH	4-19	4-72	4-72	6-45
23	VR	4-19	4-84	4-86	6-46
24	JOG	—	4-69	4-69	6-46
26	DIRECTION LED	—	4-70	4-71	6-46
27	LOADING/UNLOADING SWITCH	—	4-85	4-86	6-46
28	45 PIN CONNECTOR	4-23	4-74	4-75	6-46
29	REAR	4-19	4-76,77,78	4-79	6-47
30	FRONT LED	4-19	4-73	4-73	6-50
31	COUNTER	—	4-70	4-71	6-50
33	BRUSH	—	4-84	4-86	6-50
35	A/C HEAD	—	4-84	4-86	6-50
36	COLOR FRAME SERVO	4-20	4-56	4-57	6-50
37	(RF) 2H DELAY	4-12	4-42	4-43	6-51
38	PICK OUT DETECTOR	—	4-85	4-86	6-52
39	CONNECTOR	4-19	4-84	4-86	6-52
40	SERVO 1 SUB	4-21	4-52	4-53	6-52
41	POWER TRANSISTOR	—	4-66	4-67	6-53
51	HEADPHONE VR	4-19	4-80	4-81	6-53
52	HEADPHONE JACK	4-19	4-80	4-81	6-54
53	L CH MIC JACK	4-19	4-80	4-81	6-54
54	R CH MIC JACK	4-19	4-80	4-81	6-54
55	JACK	4-19	4-80	4-81	6-54
63	CROSS TALK CANCEL	4-15	4-36	4-27	6-54
65	Y 2H DELAY	4-13	4-32	4-33	6-57
66	REC COLOR	4-10	4-28	4-29	6-61
67	FM REC/PB	4-16	4-38	4-39	6-65

- **Index to classified circuit and system**

Board No. & Board Name	No. of Divided Diagram	Main Circuit/System on Diagram
01 REC Y	1/1	Y signal recording system
02 PB Y	1/1	Y signal playback circuit
03 PB C	1/1	Color signal playback circuit
04 Y/C SEP	1/2, 2/2	Y/C separation circuit for composite video signal input
05 PRE/REC	1/1	PB FM signal pre-amplification and REC FM signal amplification circuits
07 FM AUDIO	1/2	FM audio circuit
	2/2	Bias/erase circuit of normal audio system
08 N. AUDIO	1/1	Normal audio circuit and time code REC/PB circuit
09 ERASE/PRE	1/2	Video erase circuit
	2/2	FM audio pre-amplification circuit
10 SERVO-1	1/2	Drum servo circuit
	2/2	Drum/Capstan servo (speed control) circuit
11 SERVO-2	1/1	Reel servo circuit and Capstan FG amp. circuit
14 DRIVER	1/3	Sensor's information serial conversion, Solenoid drive, Loading & Cassette motor drive circuits
	2/3	Drum MDA circuit
	3/3	Reel MDA circuit
29 REAR	1/3	Audio input signal switching circuit
	2/3	Audio output signal switching circuit
	3/3	Connectors for video input/output signal
37 (RF) 2H DELAY	1/1	RF 2H delay circuit for DOC RF output
40 SERVO-1 SUB	1/1	Drum/capstan servo phase loop and CTL amp. circuit
66 REC COLOR	1/1	Color signal recording system
67 FM REC & PB	1/1	Switching circuit of REC/PB FM signal

● FRONT PANEL

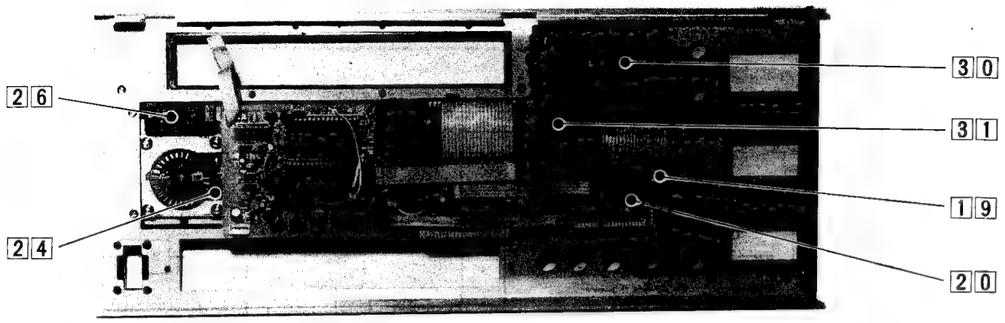

● TOP VIEW

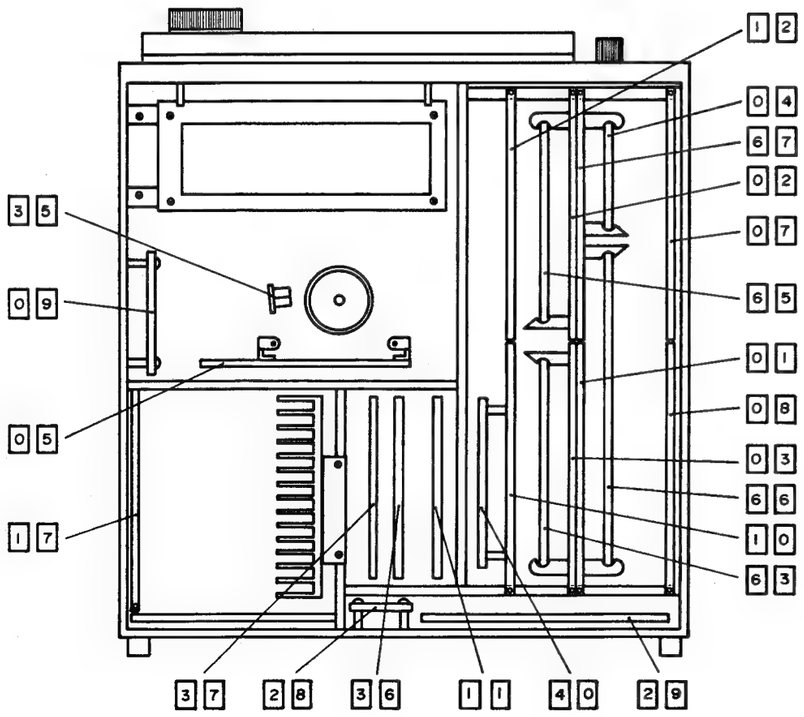

● BOTTOM VIEW

4-7

4.4 REC Y BLOCK DIAGRAM

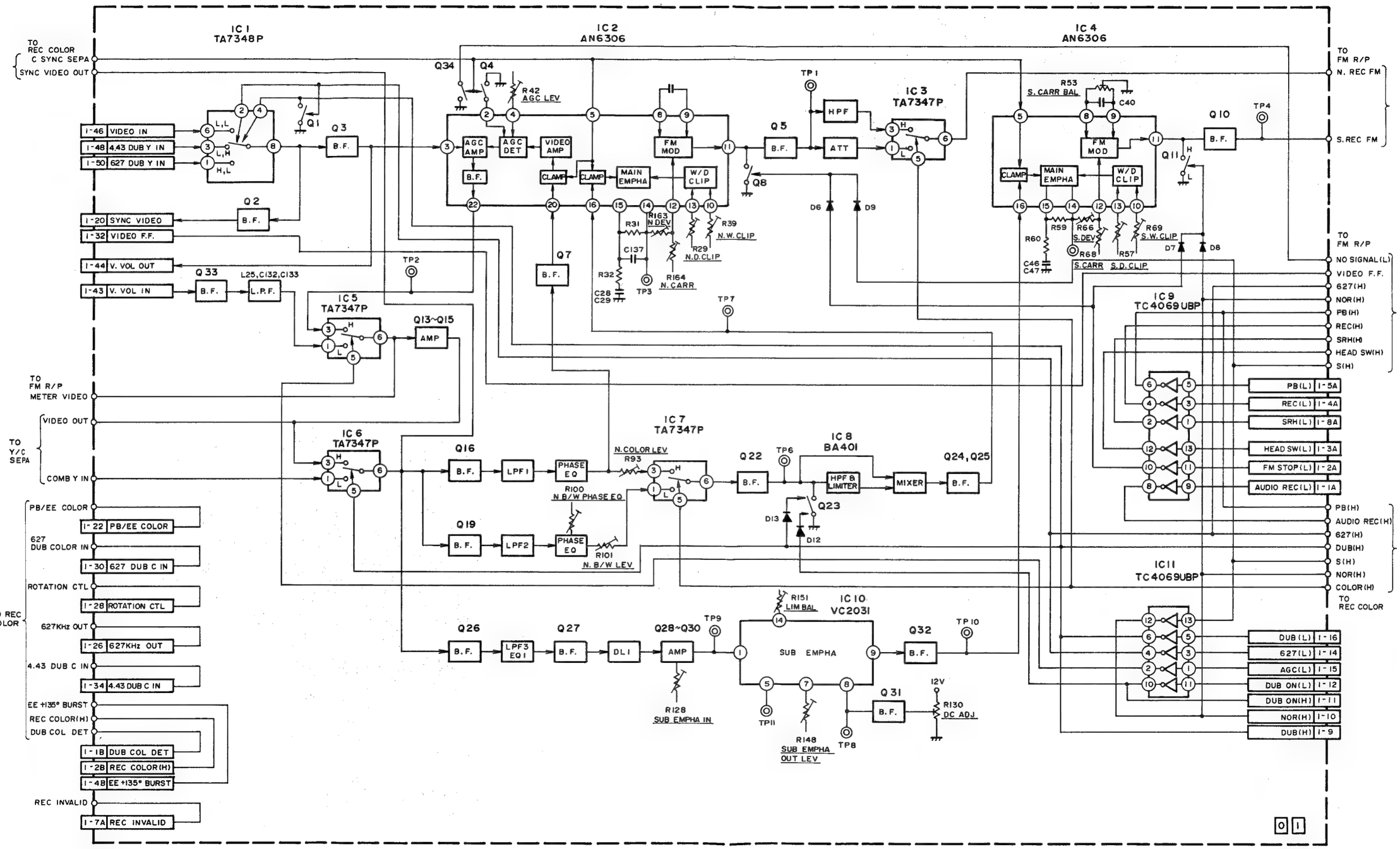

4.5 Y/C SEPARATOR BLOCK DIAGRAM

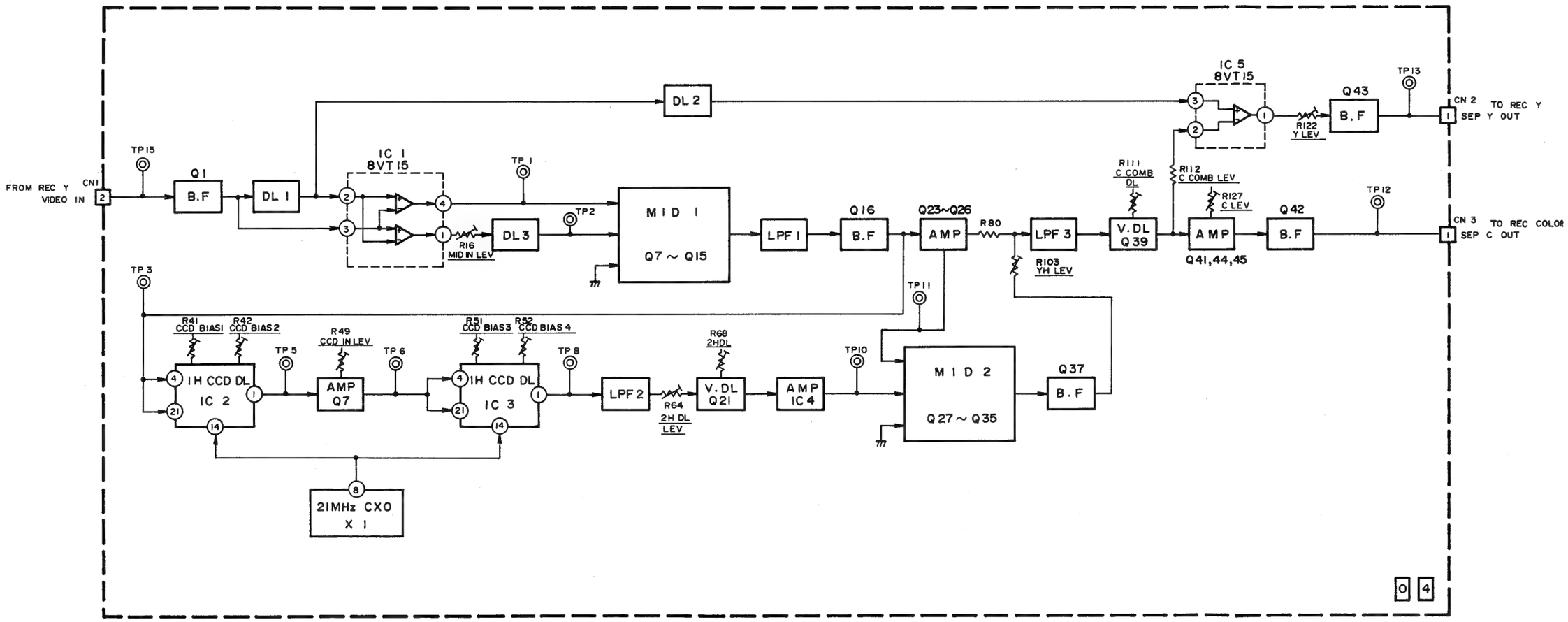

4.6 REC COLOR BLOCK DIAGRAM

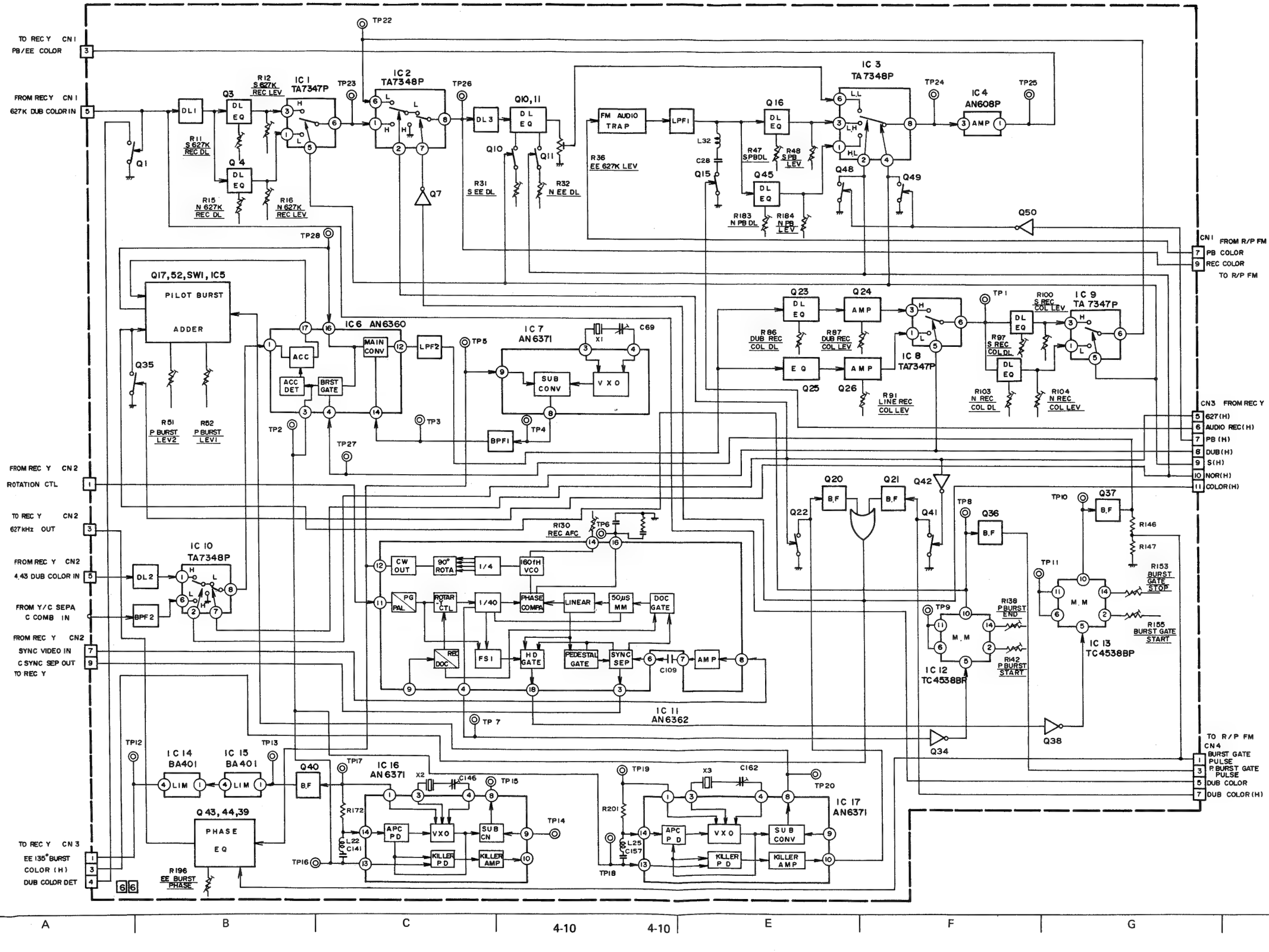

4.7 PB Y BLOCK DIAGRAM

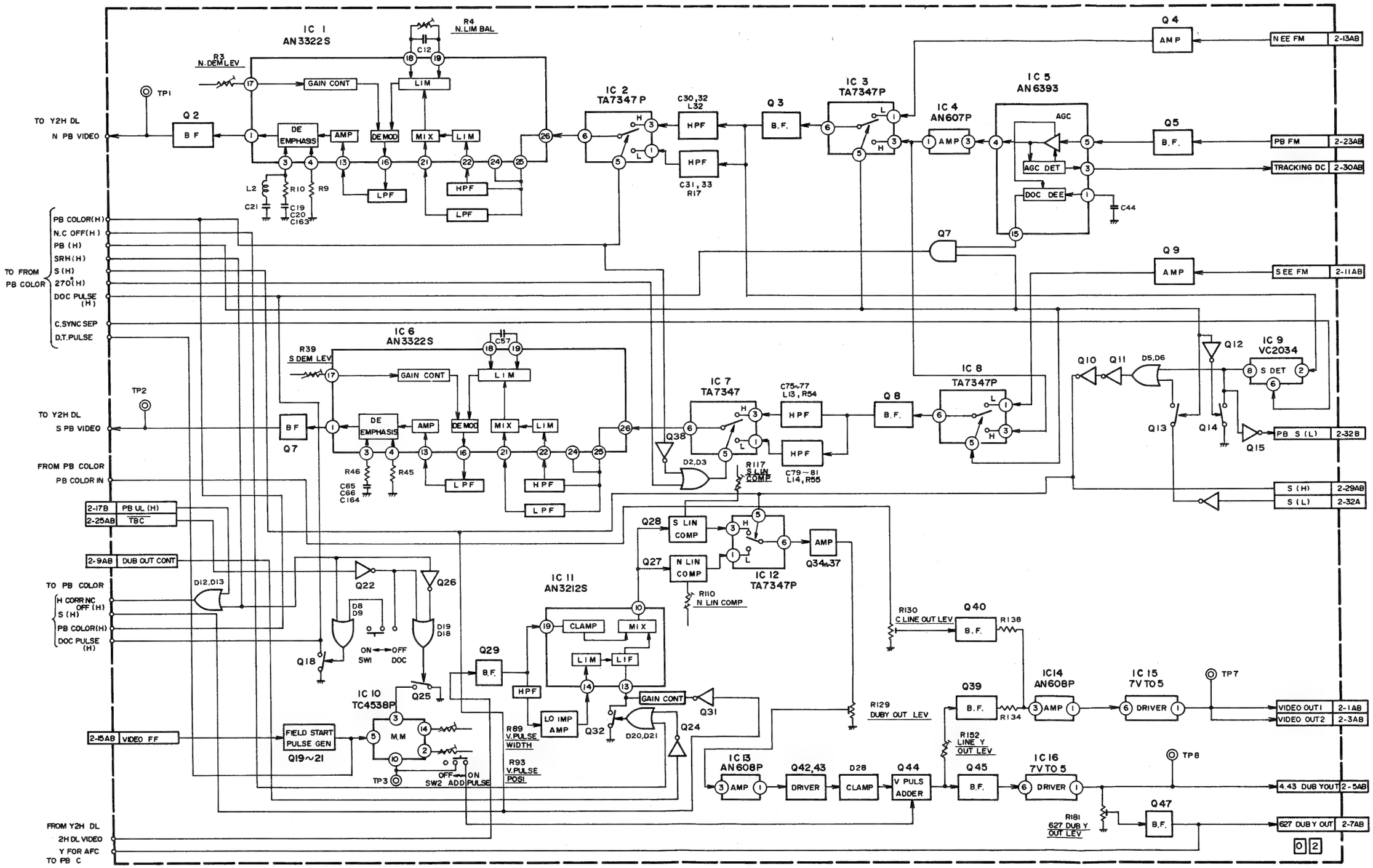

A | B | C | 4-11 | 4-11 | E | F | G | H

4.8 RF 2H DELAY BLOCK DIAGRAM

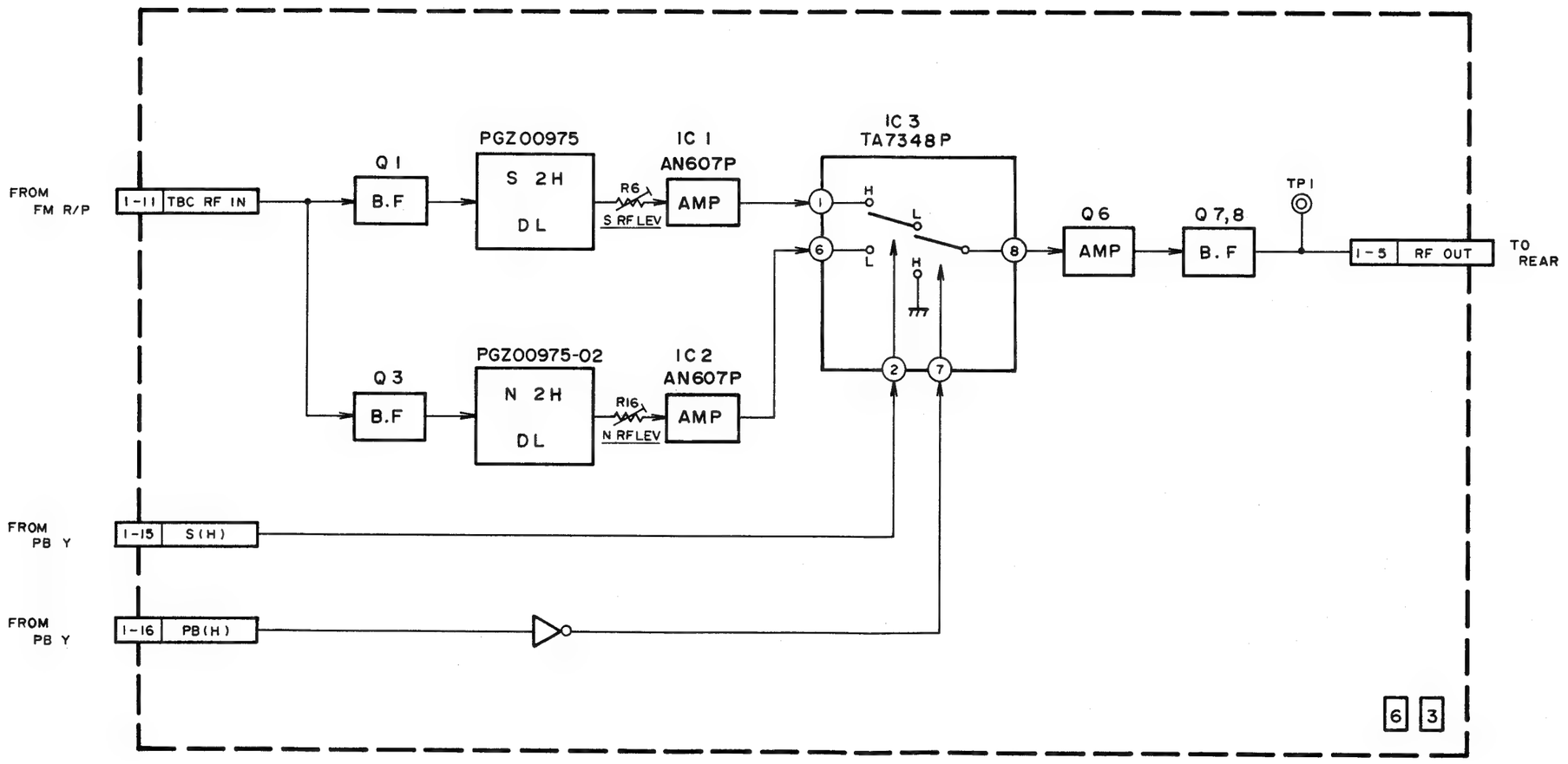

4.9 Y 2H DELAY BLOCK DIAGRAM

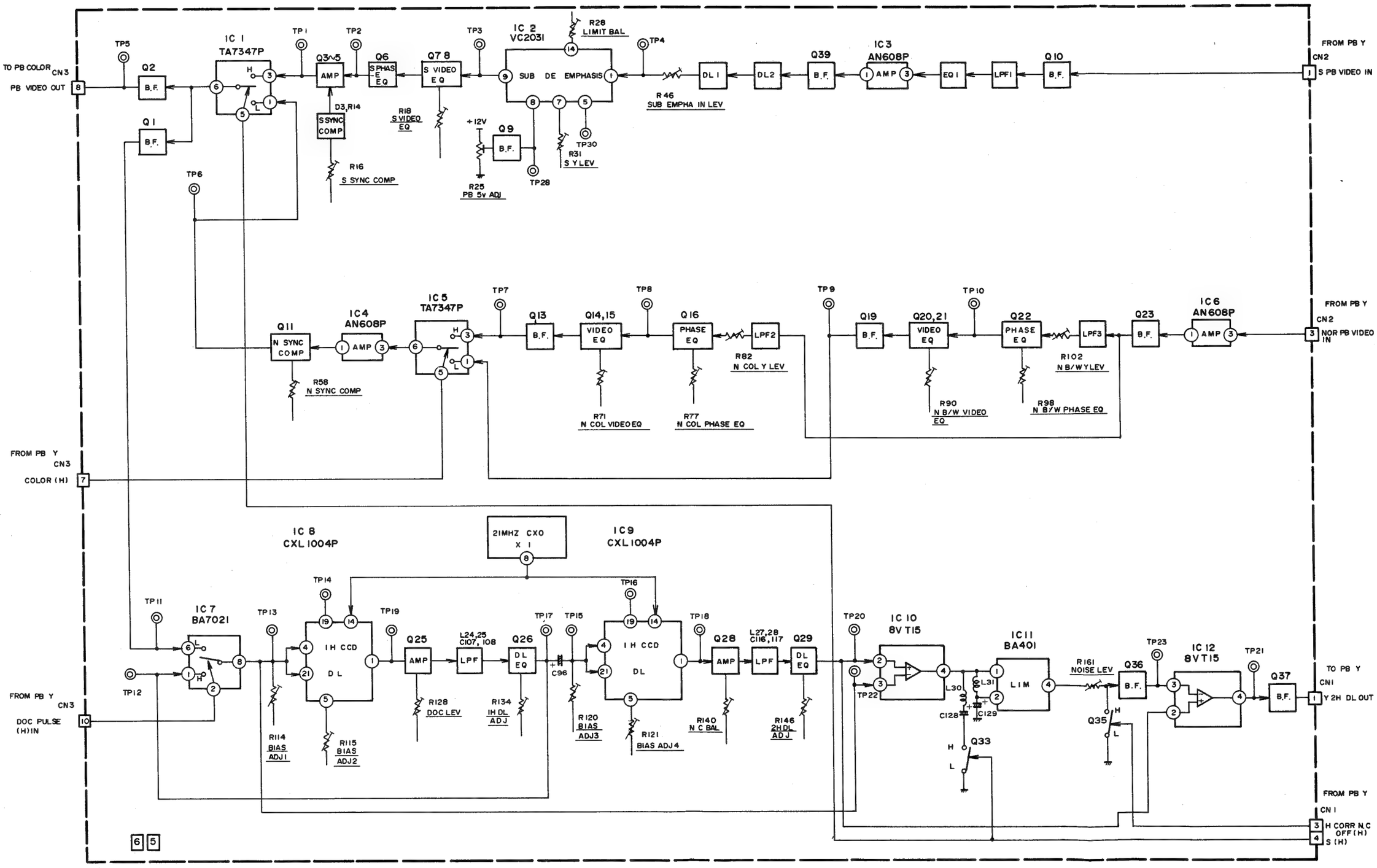

4.10 PB COLOR BLOCK DIAGRAM

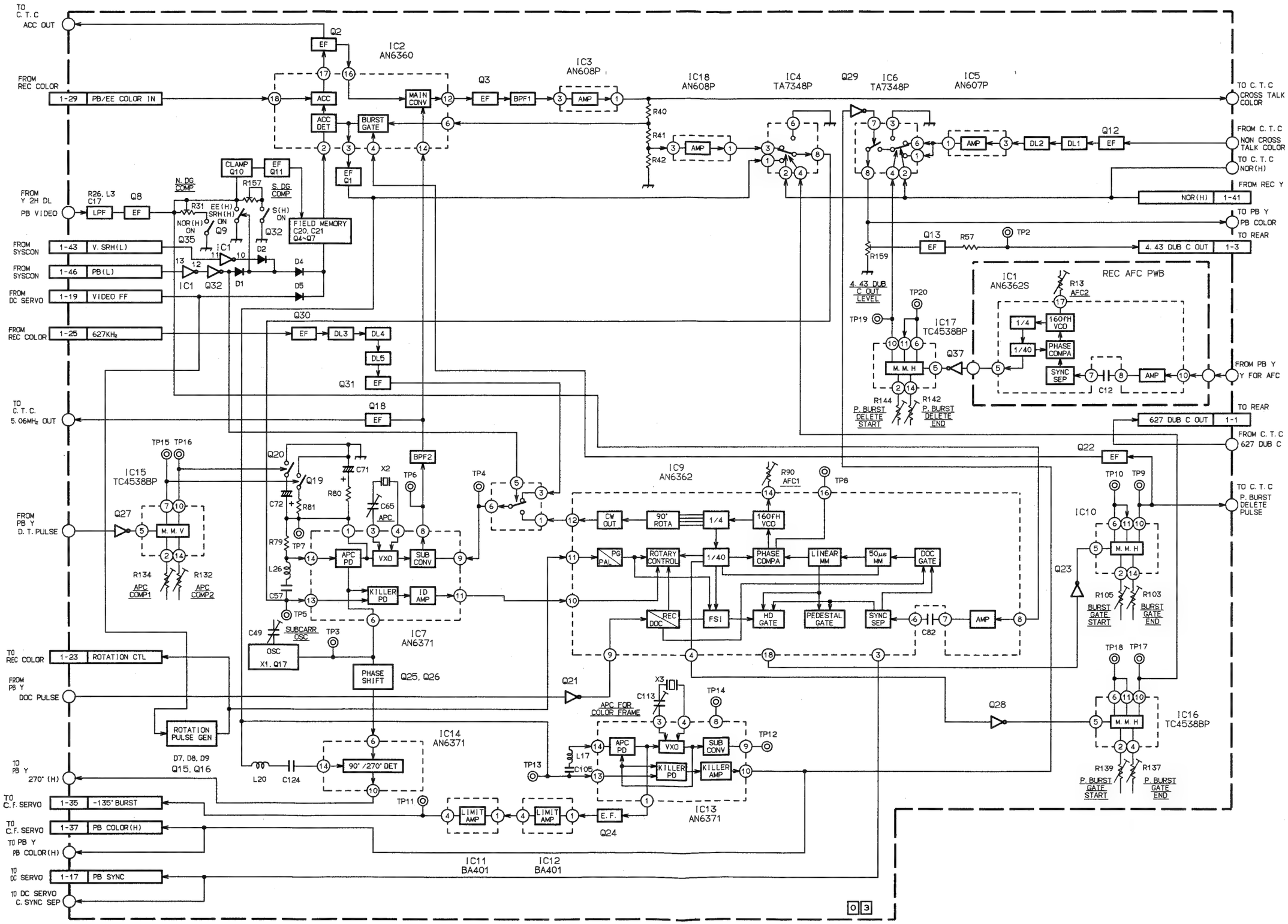

4.11 CROSSTALK CANCEL BLOCK DIAGRAM

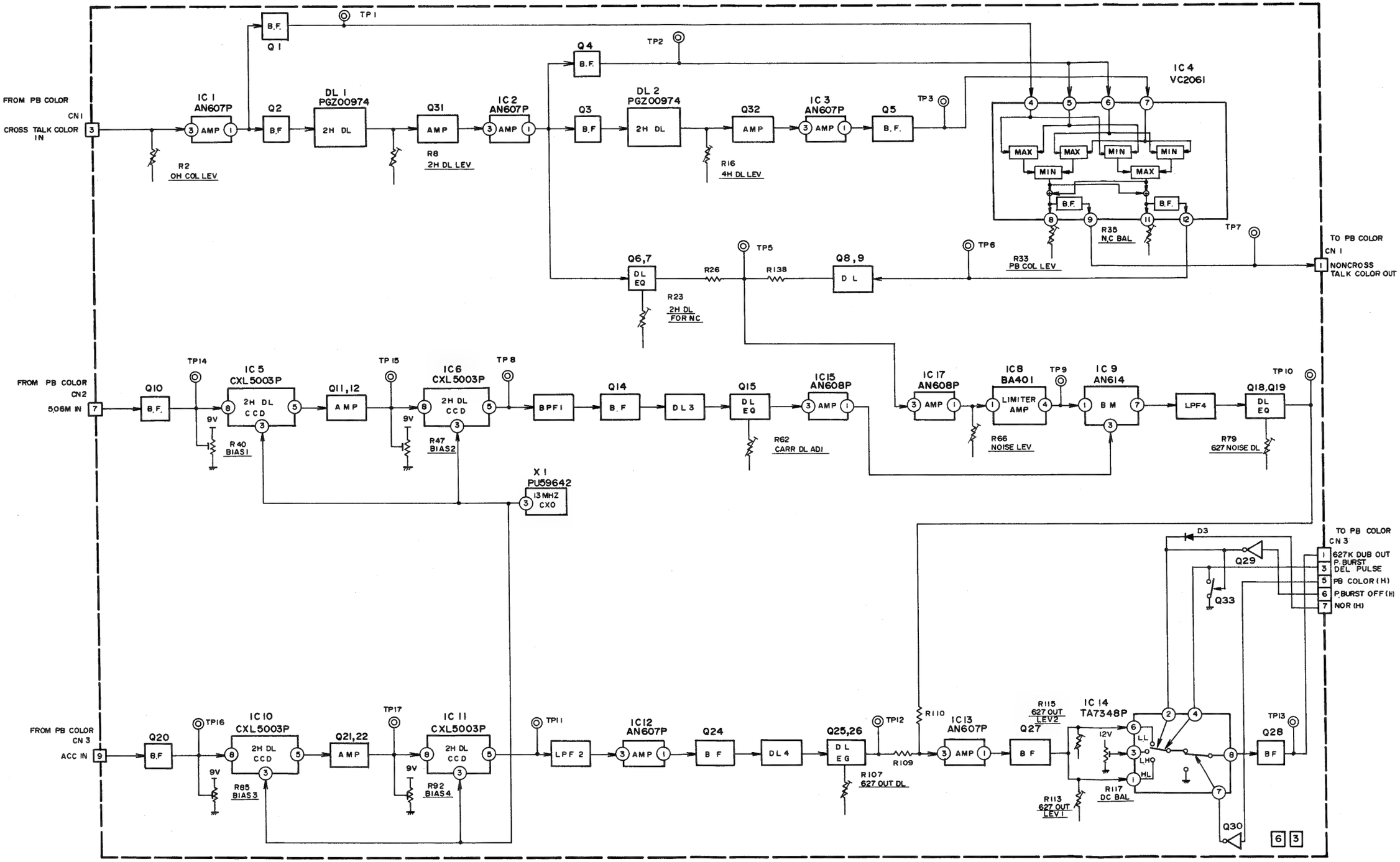

A B C 4-15 4-15 E F G H

4.12 FM REC/PB BLOCK DIAGRAM

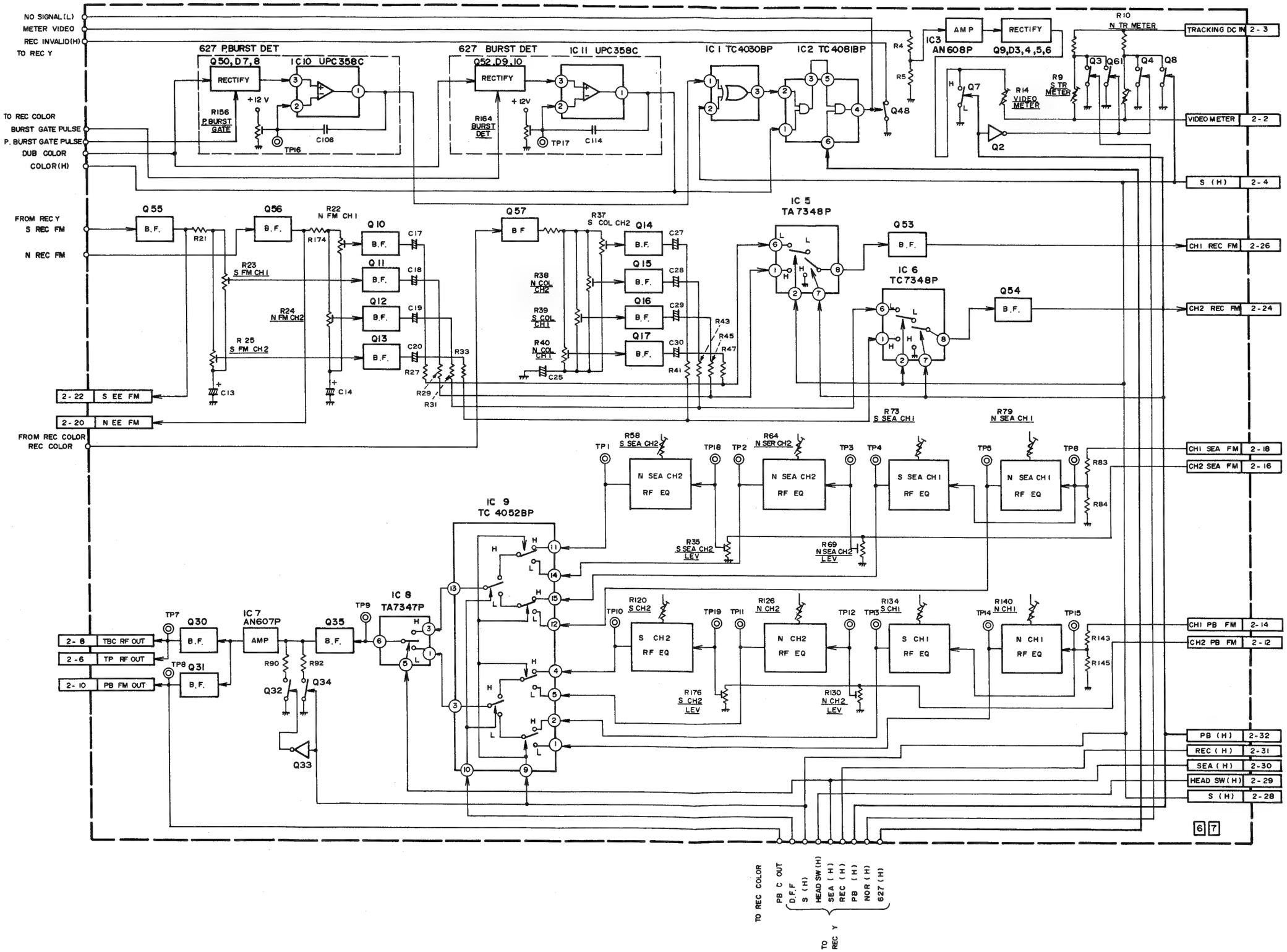

4.13 VIDEO PRE/REC AMP BLOCK DIAGRAM

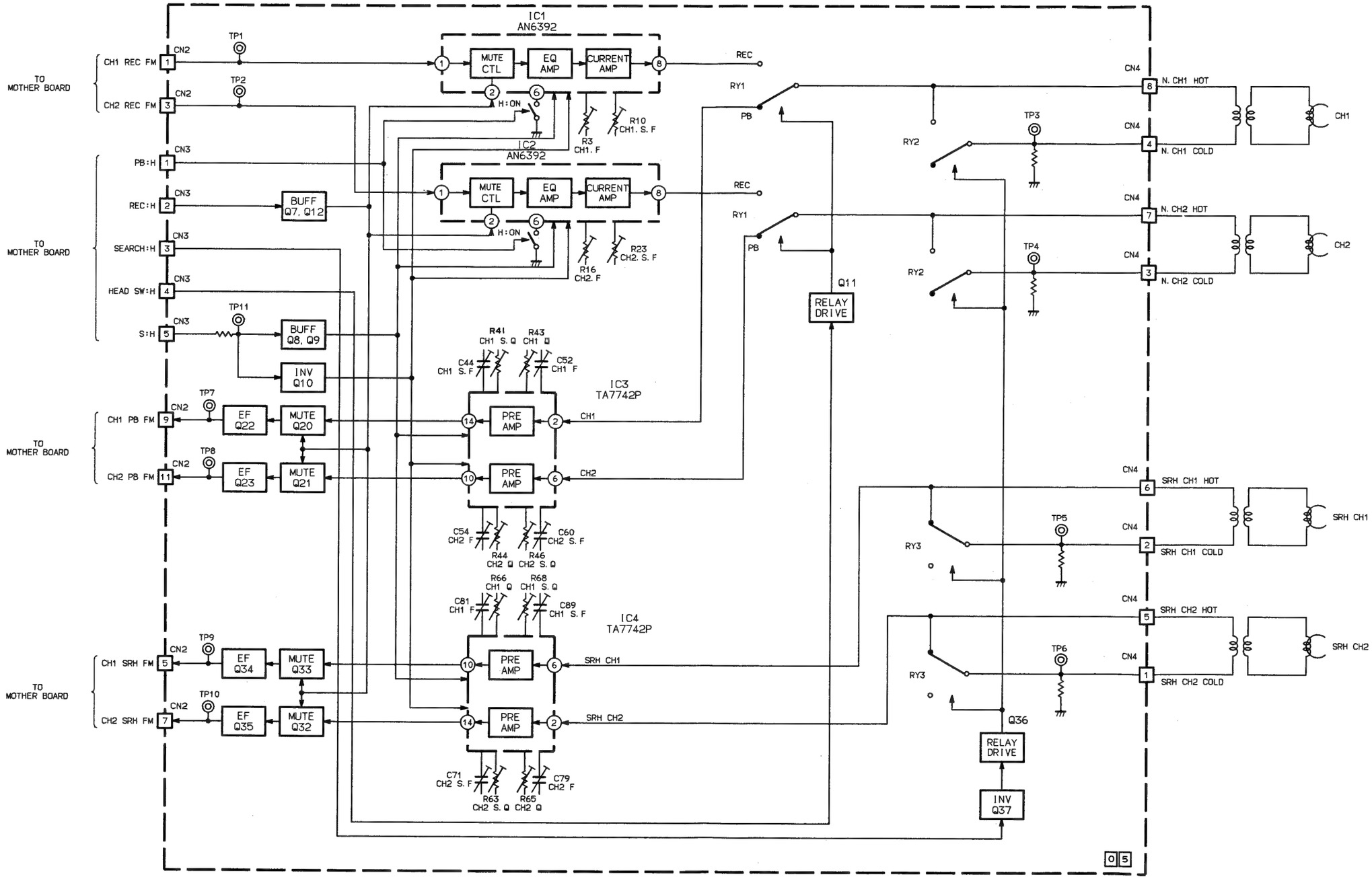

4-17

4.14 FM AUDIO BLOCK DIAGRAM

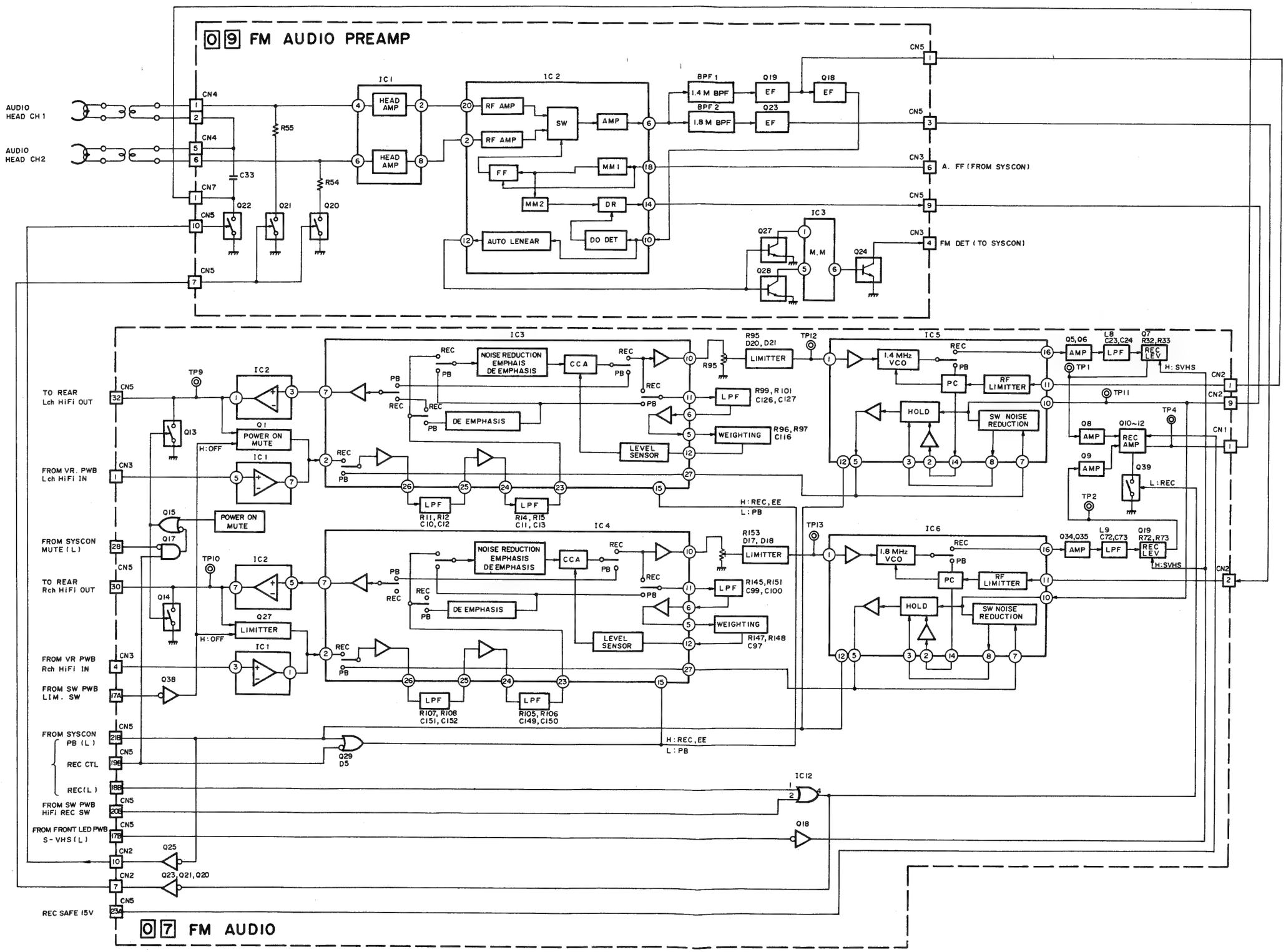

4.15 NORMAL AUDIO BLOCK DIAGRAM

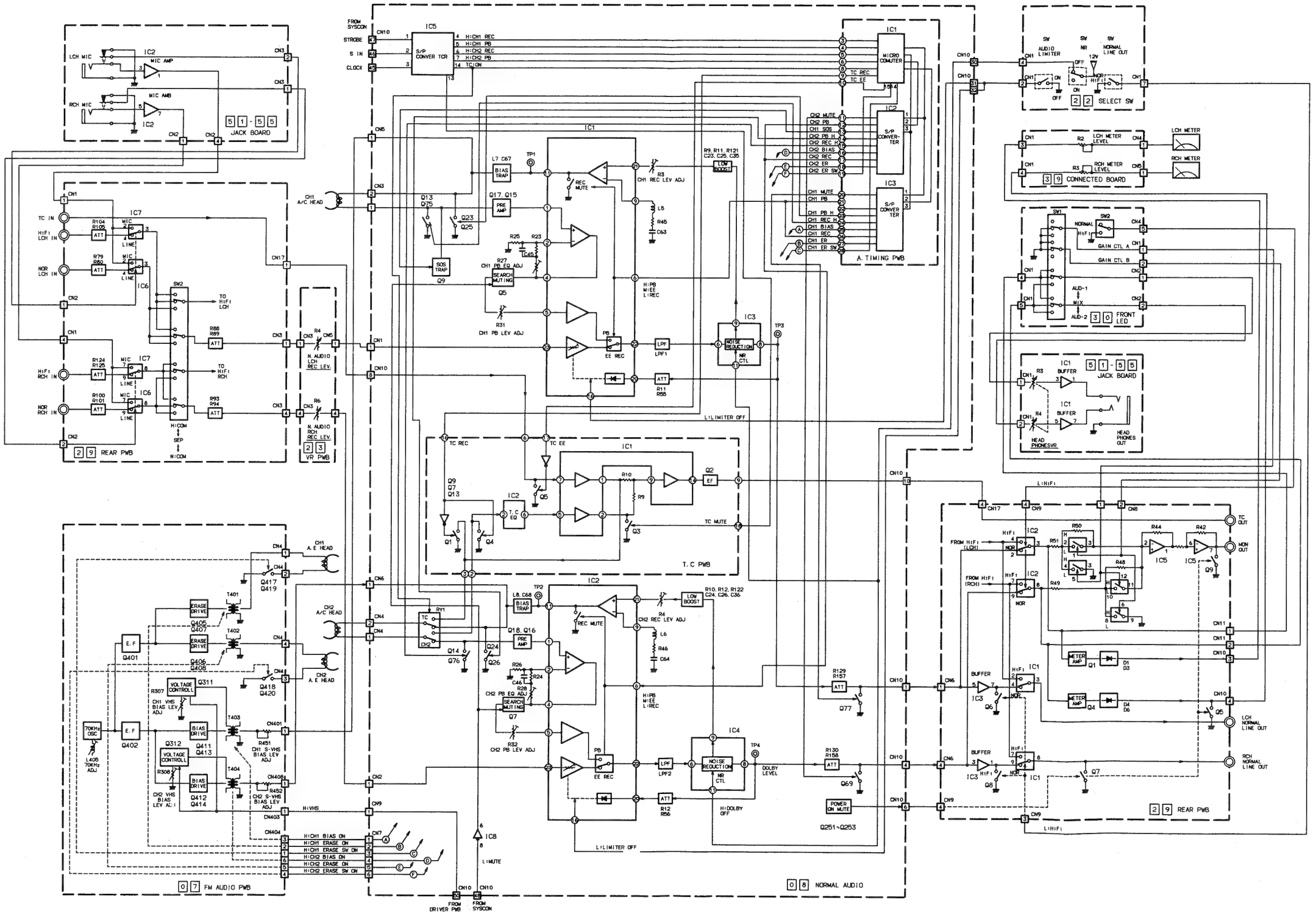

4.16 COLOR FRAME SERVO BLOCK DIAGRAM

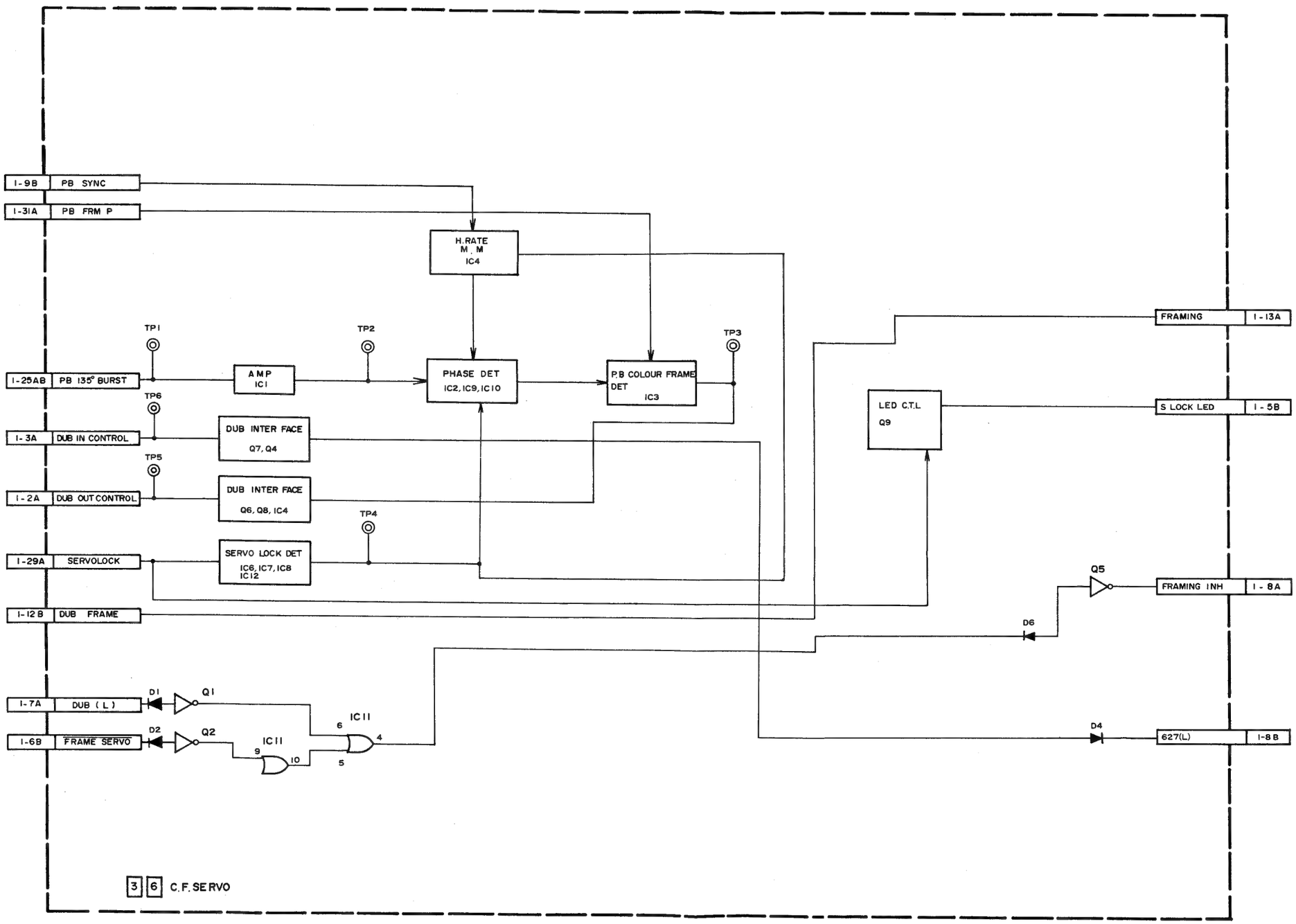

4-20

4.15 SERVO 1 BLOCK DIAGRAM

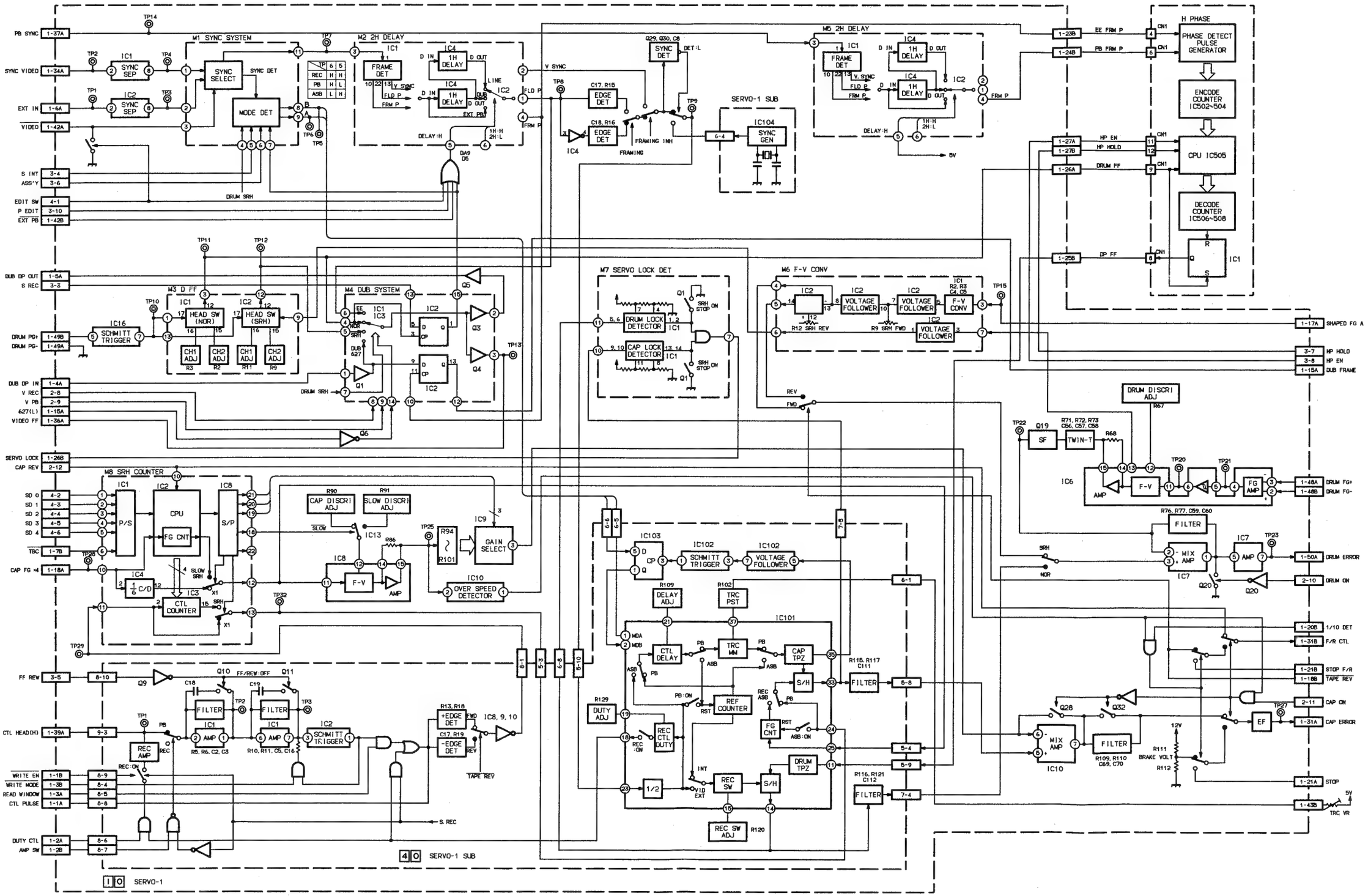

4-21

4.18 SERVO 2 BLOCK DIAGRAM

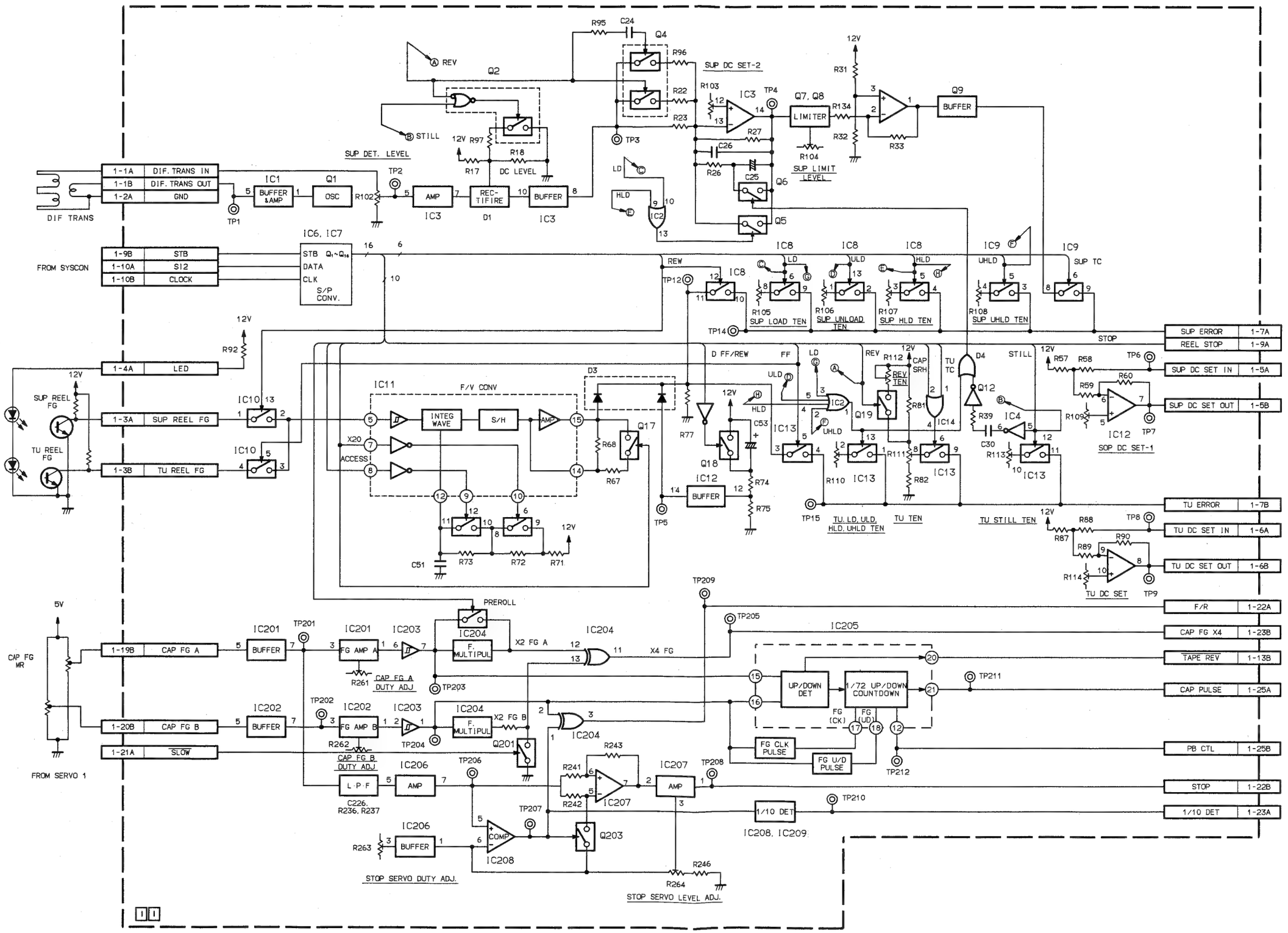

4.74 JACK CIRCUIT BOARDS

— HEADPHONE JACK 52 —

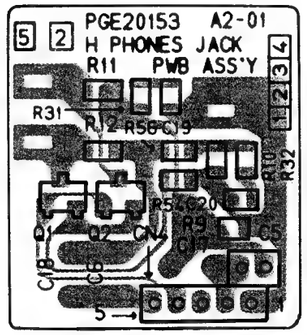

— L CH MIC JACK 53 —

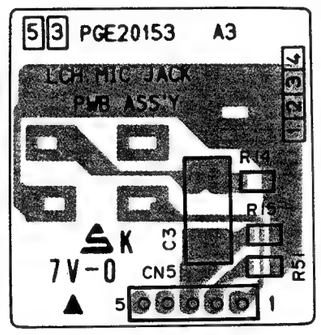

— R CH MIC JACK 54 —

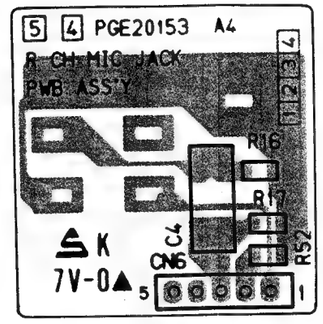

— HEADPHONE VR 51 —

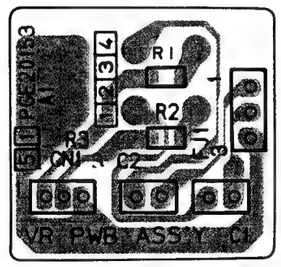

— JACK 55 —

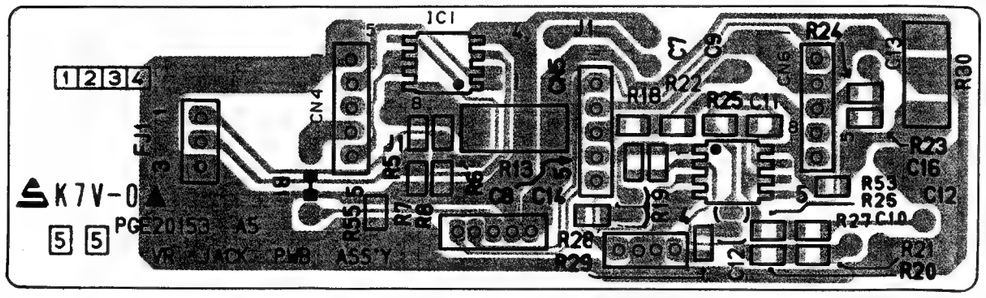

4.75 MOTHER SCHEAMTIC DIAGRAM

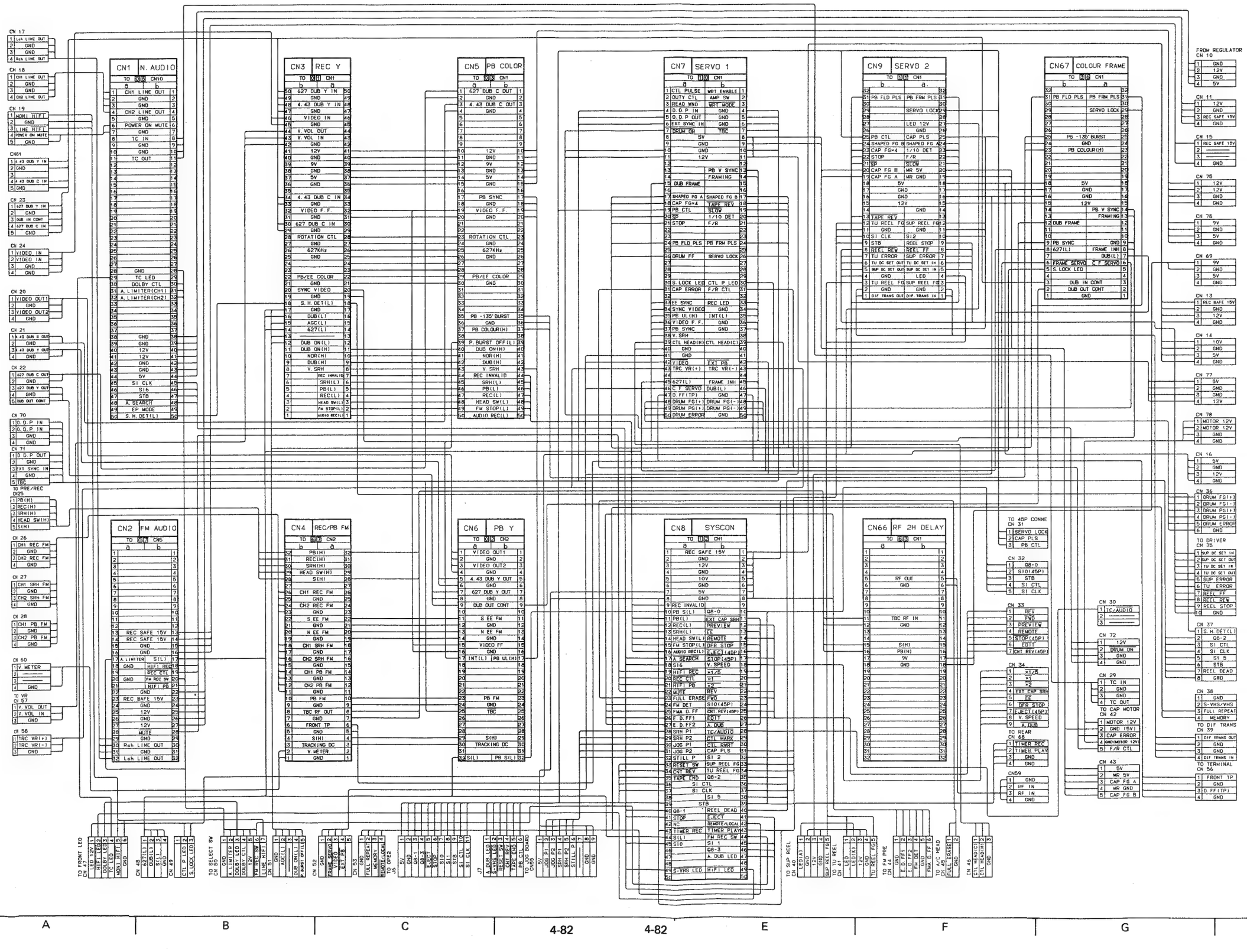

4.76 MOTHER CIRCUIT BOARD

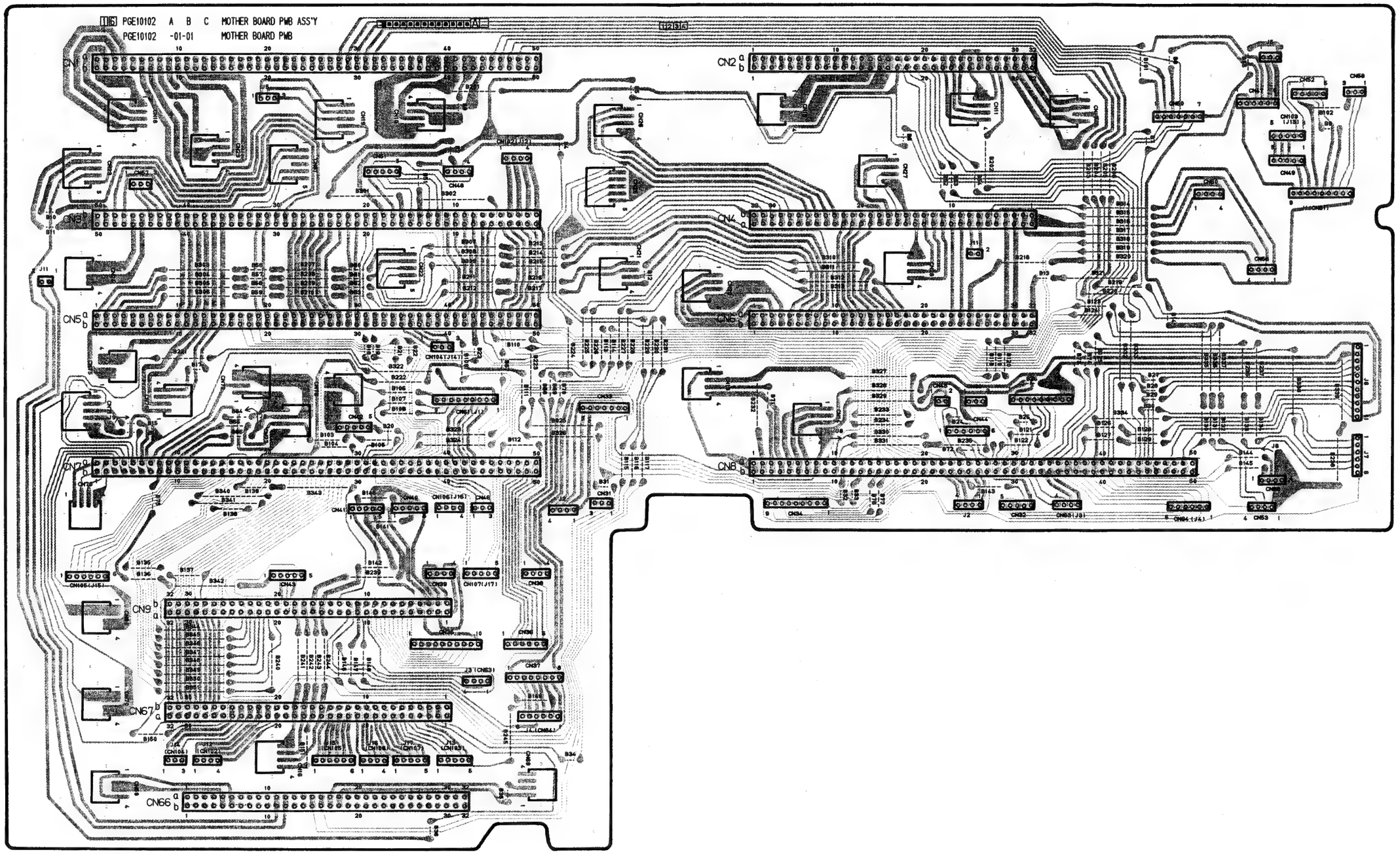

4.77 OVERALL WIRING DIAGRAM

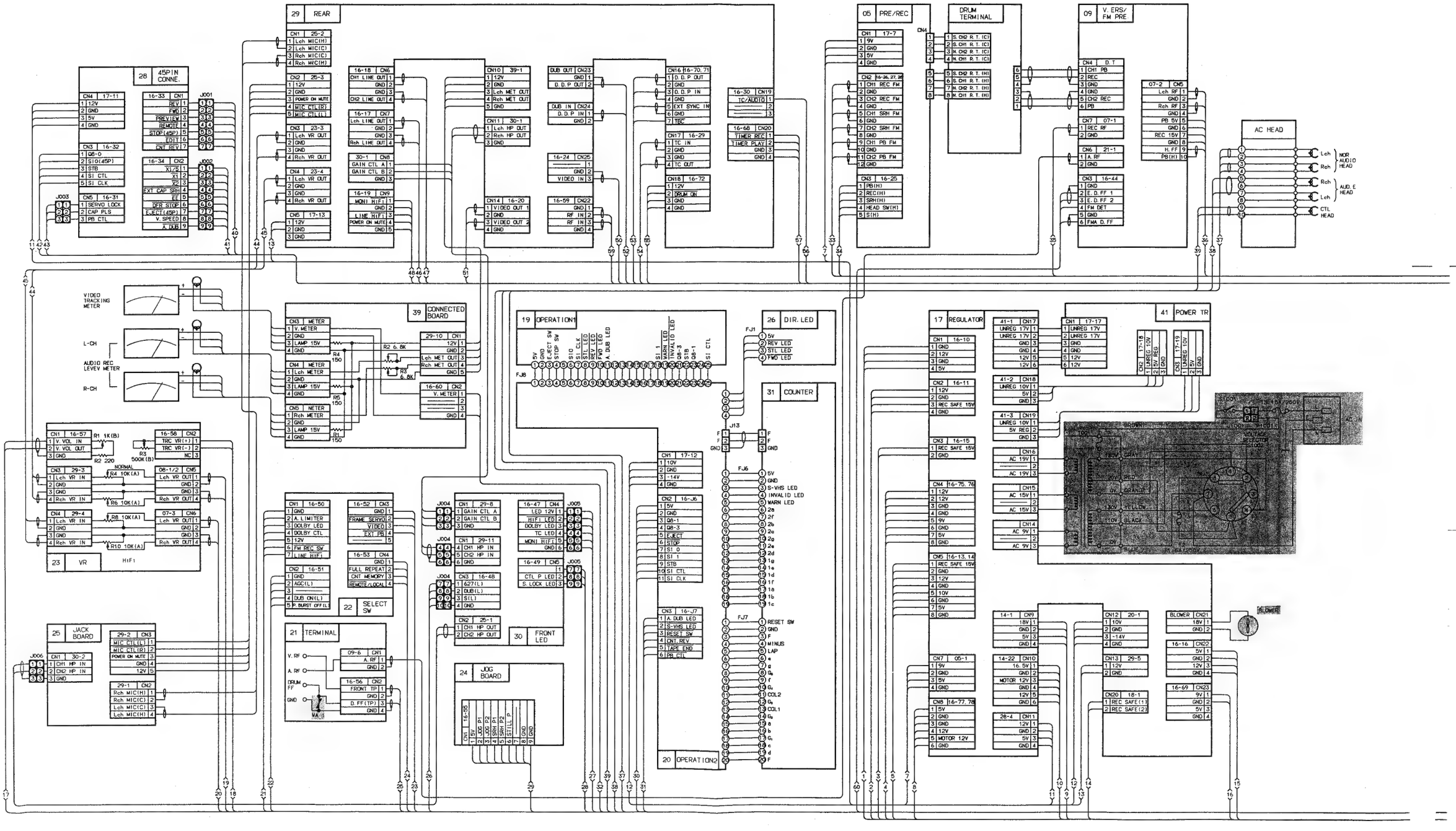

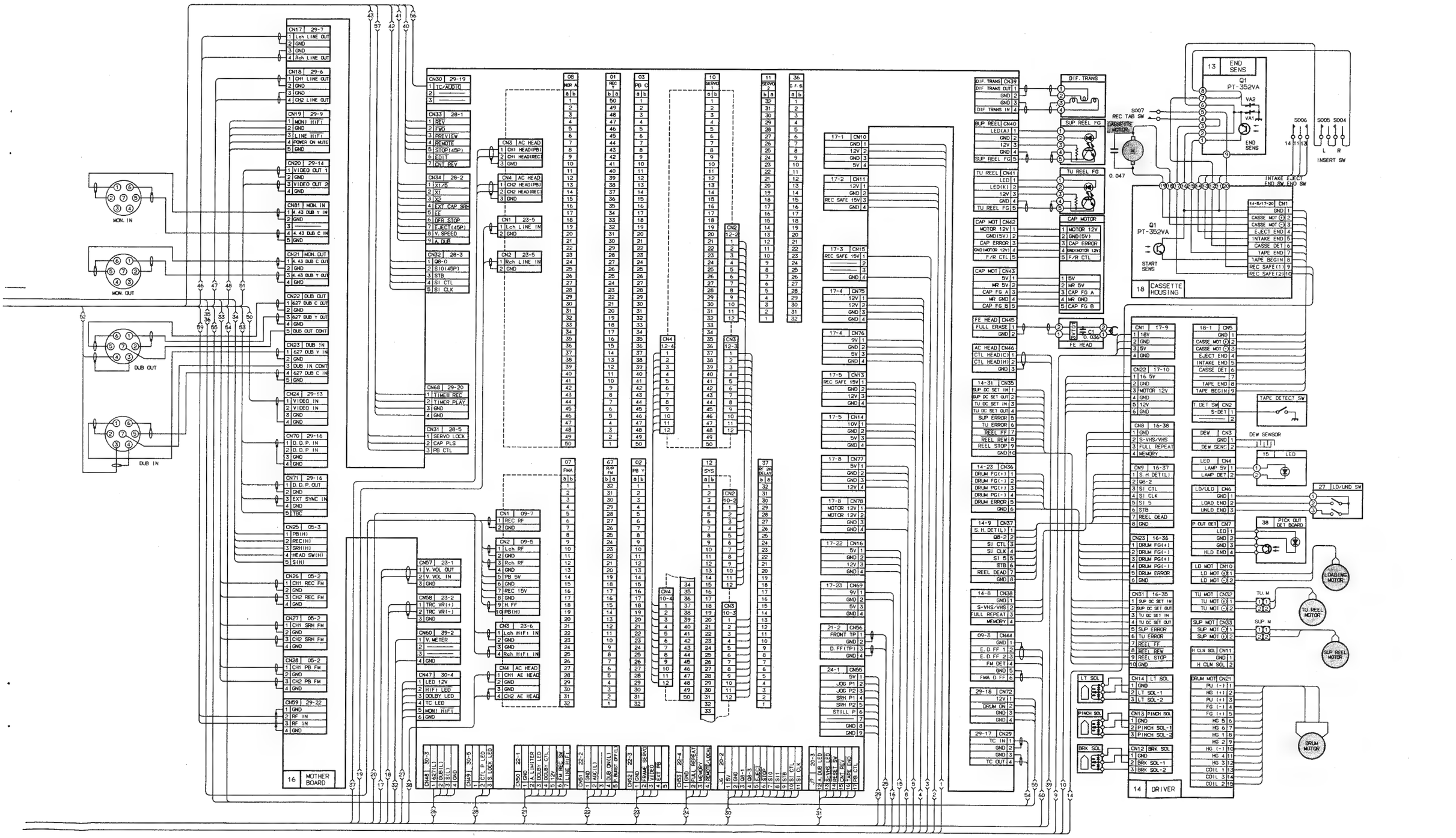

I J K L 4-85 4-85 N O P

4.78 CASSETTE HOUSING, TERMINAL AND etc. CIRCUIT BOARDS

— FULL ERASE [06] —

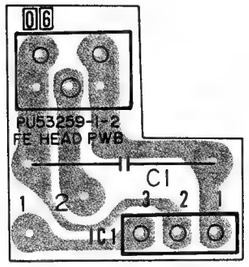

— END SENSOR [13] —

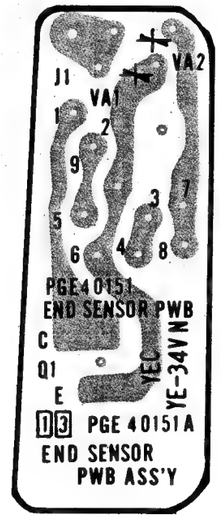

— LED [15] —

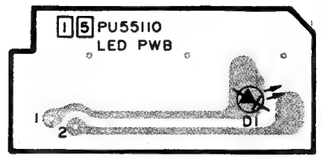

— CASSETTE HOUSING [18] —

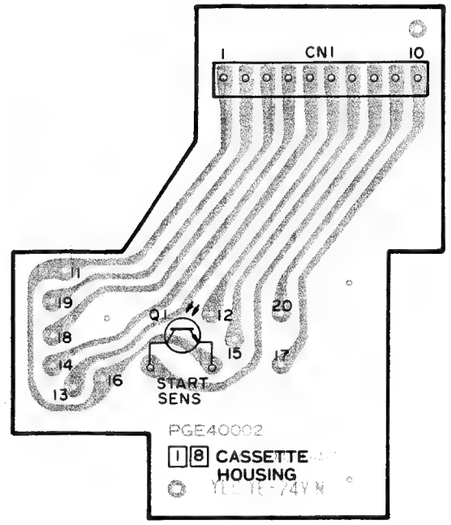

— TERMINAL [21] —

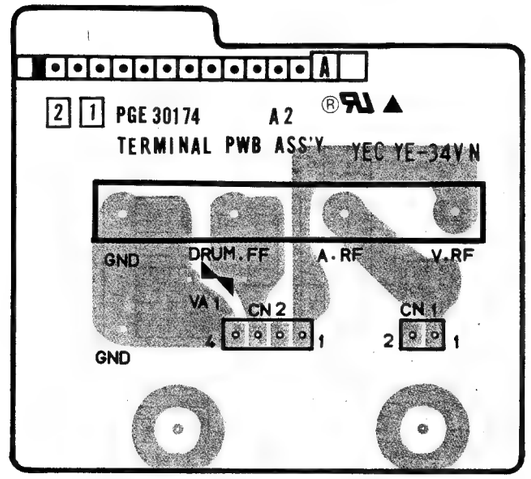

— VR [23] —

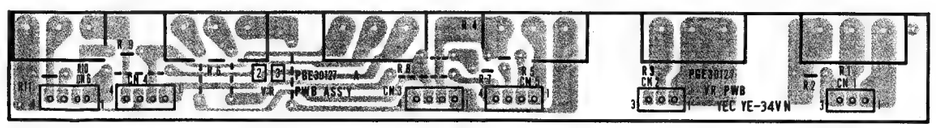

— LOADING/UNLOADING SW [27] —

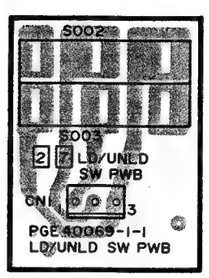

— A/C HEAD [35] —

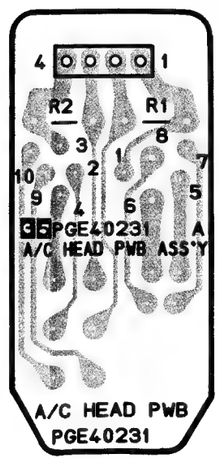

— PICK OUT DETECT [38] —

— CONNECTED [39] —

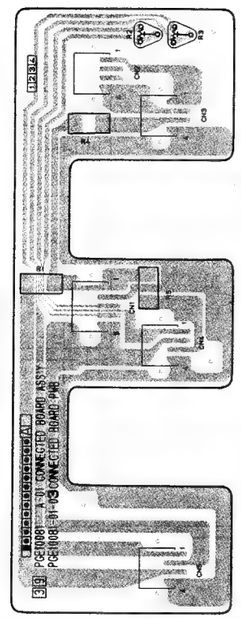

4.79 IC BLOCK DIAGRAM

– AN3212S –

VTR Video Signal Processing Circuit

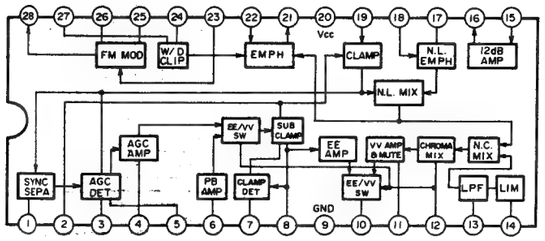

[Terminal Description]

Pin No.	Description	Pin No.	Description
1	Sync Tip Level Det.	15	12 dB Amp In
2	Sync Out	16	12 dB Amp Out
3	EE Level Adj.	17	Non Linear Emphasis Sub In
4	REC Video Signal In	18	PG & 2/4/6H Select
5	AGC Det.	19	Main Clamp In
6	PB Video Signal In	20	Vcc
7	Sub Clamp Det.	21	Main Emphasis Out
8	Sub Clamp Out.	22	FB Amp In
9	GND	23	MOD In
10	EE/VV Out	24	Dark Clip Level Adj.
11	Dummy Sync Pulse In	25	MOD
12	PB Chroma In	26	MOD
13	Noise Canceller L.P.F.	27	White Clip Level Adj.
14	Noise Canceller H.P.F In	28	FM Out

– AN3322S –

VTR Luminance Signal Processing Circuit

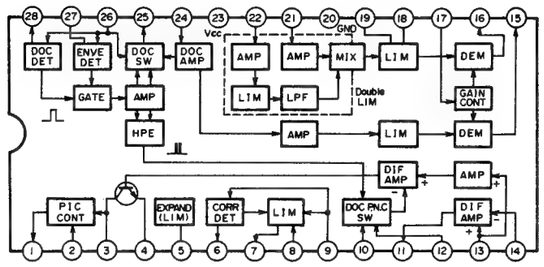

[Terminal Description]

Pin No.	Description	Pin No.	Description
1	Video Out	15	DEM (1HDL) Out
2	Picture Control	16	DEM Out
3	Deemphasis	17	DEM Gain Control
4	Peaking	18	LIM
5	Expand	19	LIM
6	Corr Pulse Out	20	GND
7	Line N. C. LIM Out	21	Double LIM LPF In
8	Vcc	22	Double LIM HPF In
9	Line N.C. LIM In	23	Vcc
10	Diff Signal In	24	1H Delay RF In
11	Diff Signal Out	25	RF Out
12	Limited Signal In	26	RF In
13	Video In	27	Envelop DET
14	Video (1 HDL) In	28	DOC Pulse Out

– AN607P –

Wide Band Amplifier Circuit

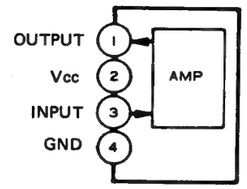

– AN608P –

Wide Band Amplifier Circuit

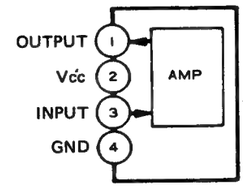

– AN614 –

Video Amplifier, Balance Modulator

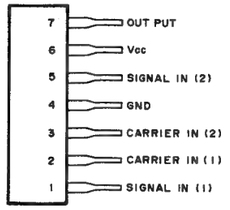

– AN6306 –

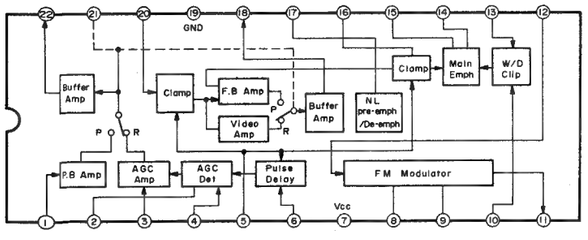

[Terminal Description]

Pin No.	Description	Pin No.	Description
1	PB Video Input	12	FM Mod. Input
2	AGC Det.	13	Dark Clip Adj
3	REC Video Input	14	Main Empha. Output
4	EE Adj	15	Main Empha. NF Input
5	H. Sync. Input	16	Clamp Input (FB)
6	Pulse Delay Timing	17	Non Linear Empha.
7	Vcc	18	Video Output
8	FM Modulator	19	GND
9	FM Modulator	20	Clamp Input
10	White Clip Adj	21	REC/PB Select
11	FM Mod. Output	22	EE Output

– AN6360 –

VTR Color ACC Circuit

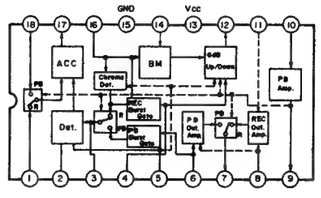

[Terminal Description]

Pin No.	Description	Pin No.	Description
1	ACC Rec. Input	10	P.B. Amp. Input
2	Burst Detect	11	Rec. Current Select
3	Burst Output	12	B.M. Output
4	Burst Gate Pulse Input	13	Vcc
5	Chroma Select Burst 6dB up/down Select	14	Carrier Input
6	Output Amp. P.B. Chroma Input	15	GND
7	Chroma Output	16	Signal Input
8	Output Amp. Rec. Chroma Input C/B/W Select	17	ACC Output
9	P.B. Amp. Output R/P.B. Select	18	ACC P.B. Input

– AN6362 –
– AN6362S –

VTR Color AFC Circuit

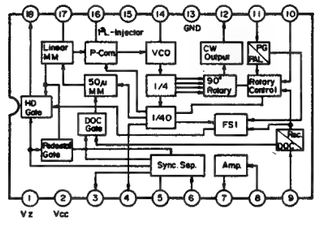

[Terminal Description]

Pin No.	Description	Pin No.	Description
1(1)	Zener Voltage	10(12)	ID Input
2(2)	Vcc	11(13)	PG Input (Head SW)
3(4)	Vss Output for V Sync.	12(15)	CW Output (630 kHz)
4(5)	Sync. Front Pulse Output	13(16)	GND
5(6)	Low Pass Filter	14(17)	VCO Control
6(7)	Sync. Sep. Input	15(18)	I^2L Injector
7(8)	White Clip Output	16(19)	P-Com. Filter
8(10)	Video Input	17(21)	Linear Mono. Multi.
9(11)	Rec./DOC Select	18(22)	HD Output for Burst Gate

Note : Figures in ( ) indicate pin numbers of AN6362S.

– AN6371 –
– AN6371S –

VTR Color APC Circuit

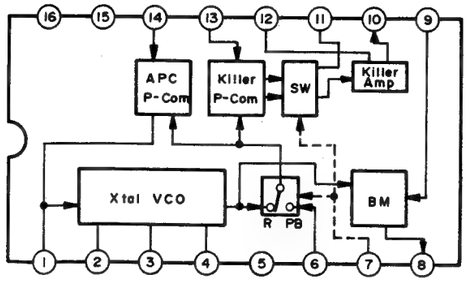

[Terminal Description]

Pin No.	Description	Pin No.	Description
1(1)	APC Filter	9(12)	627 kHz Input
2(3)	X'tal Osc.	10(13)	Killer Output
3(4)		11(15)	ID Detect
4(5)		12(16)	Killer Detect
5(6)	Vcc	13(17)	Killer Burst Input
6(7)	4.43 MHz Input	14(19)	APC Burst Input
7(9)	Rec./P.B. Select	15(20)	GND
8(11)	5.06 MHz Output	16(22)	Killer Filter

Note : Figures in ( ) indicate pin numbers of AN6371S.

4-87

– AN6393 –

VTR Luminance Signal Processing Circuit

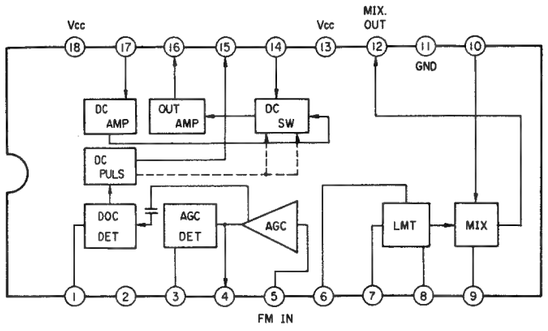

– AN6394 –

VTR Audio REC/PB Circuit

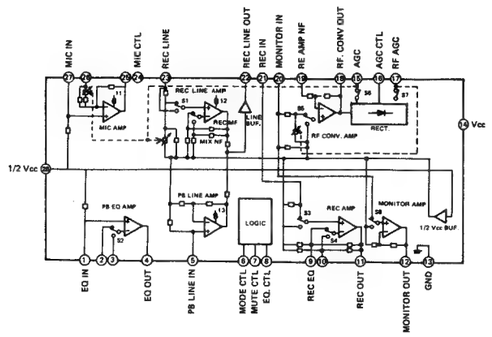

– BA10339F –

Quad Comparator

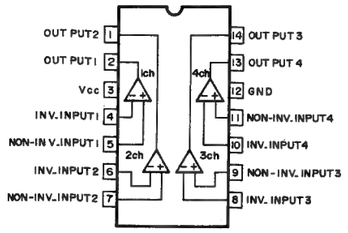

– BA222 –

Monolithic Timer

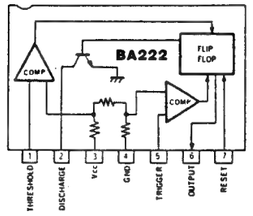

– BA401 –

FM-IF Differential Amplifier

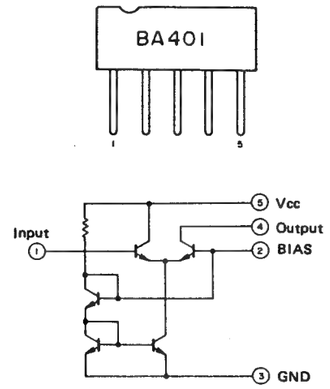

– BA6302A –

VTR Motor-Speed Control Circuit

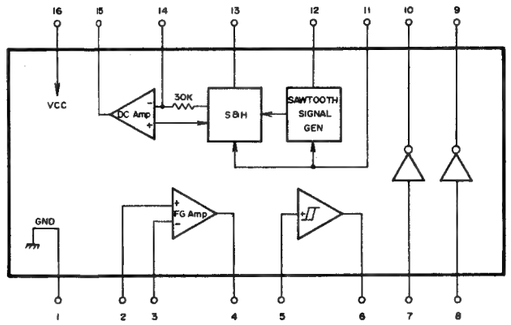

– CXL1004P –

CCD Signal Processor

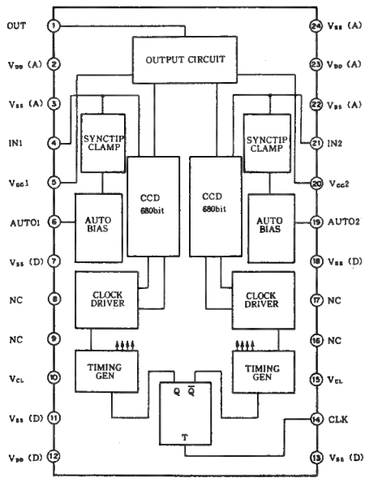

– CXL5003P –

CMOS CCD 2H Delay Line

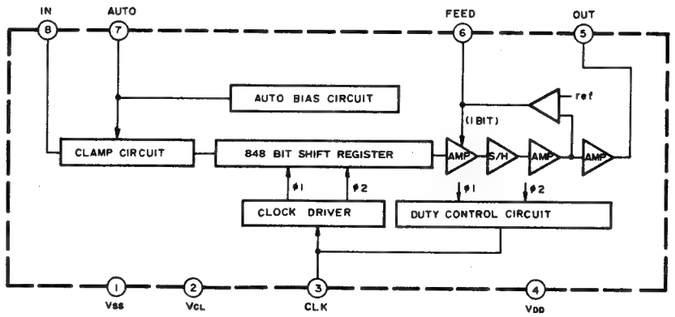

– HA11780MP –

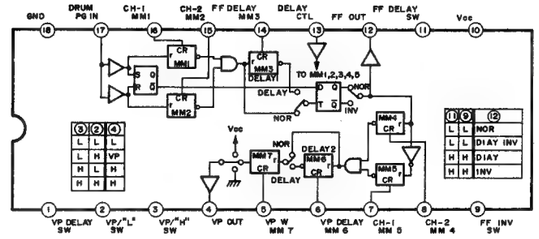

– MN50005JVES –

500-Gate CMOS Gate Array

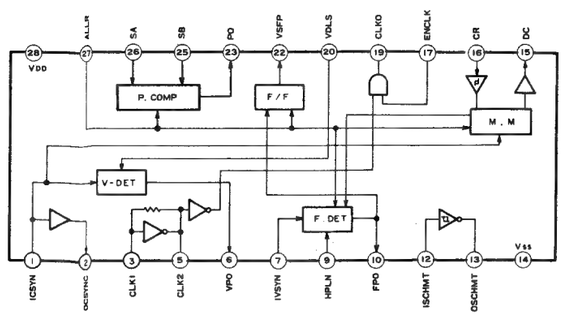

– M51207L –

Dual Comparator

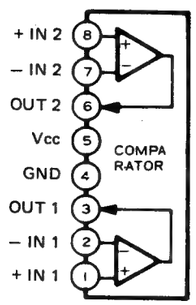

– M51490L –

Video Equalizer

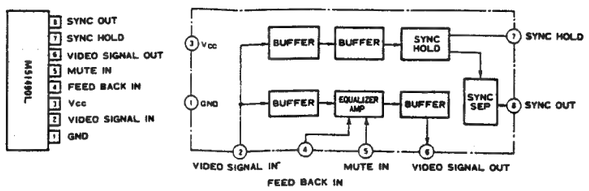

– M5216FP –

Dual Operational Amplifier

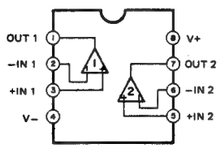

– M54519P –

7-Unit 400 mA Darlingron Transistor Array

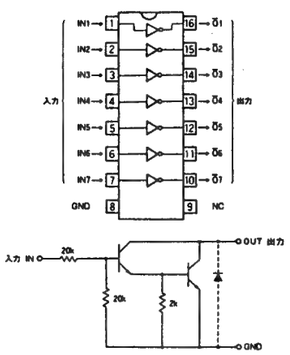

4-88

— M54543L —

Bi-Directional Motor Driver With Brake Function

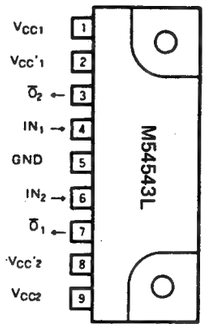

TRUTH TABLE

INPUT		OUTPUT	
IN_1	IN_2	$\overline{O}_1$	$\overline{O}_2$
L	L	"OFF" state	"OFF" state
H	L	H	L
L	H	L	H
H	H	L	L

— NJM2068MD —

Dual Operation Amplifier

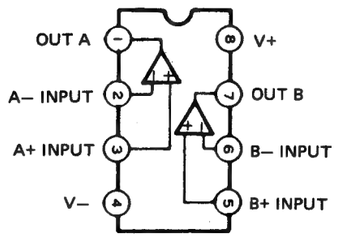

— SM6430C —

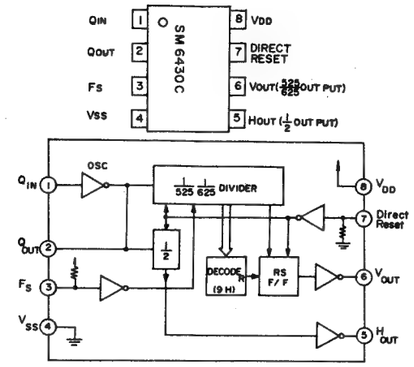

— STR2012A —

Chopper Regulator

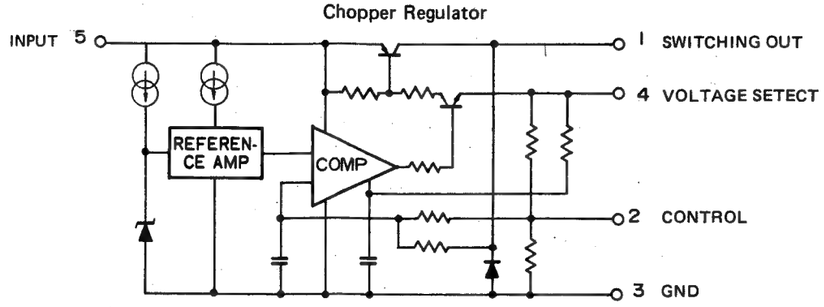

— STR2124 —

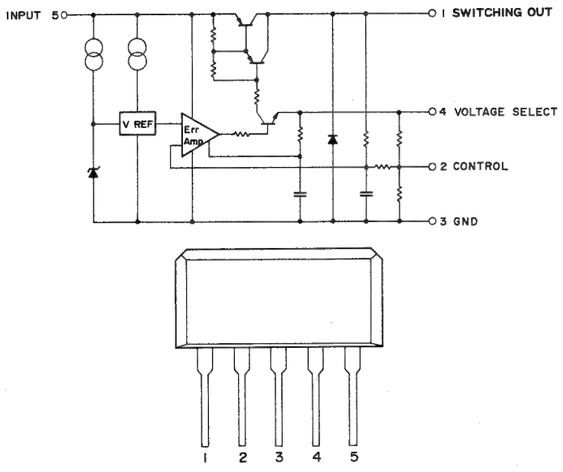

— TA7140P —

Voltage Amplifier

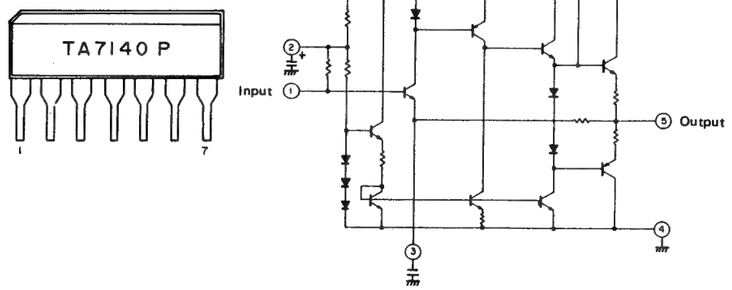

— TA7347P —

2-Input Switch

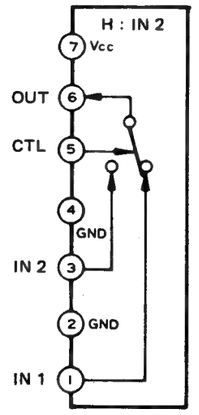

— TA7348P —

3-Input Switch

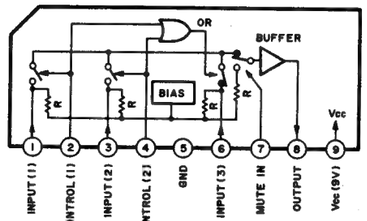

Truth Table

CONTROL (1) 2 Pin	CONTROL (2) 4 Pin	MUTE INPUT 7 Pin	OUTPUT 8 Pin
H	L	L	INPUT(1)
L	H	L	INPUT(2)
L	L	L	INPUT(3)

— TA7629P —

Dolby B Type Noise Reduction Processor

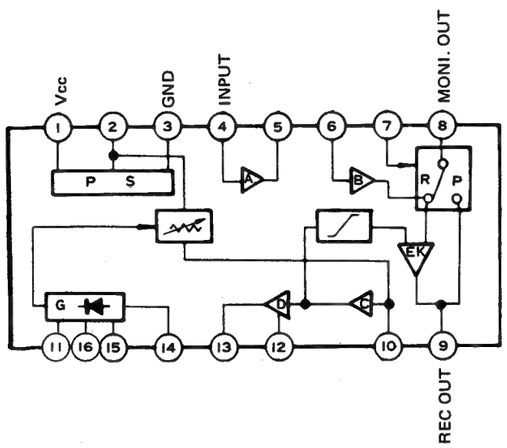

— TC4S71F —

OR

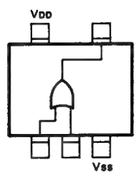

— TC4069UBP —

Hex Inverter

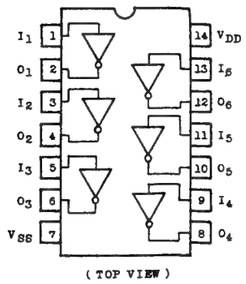

— TC4538BP —

Dual Precision Retriggerable/
Resettable Monostable Multivibrator

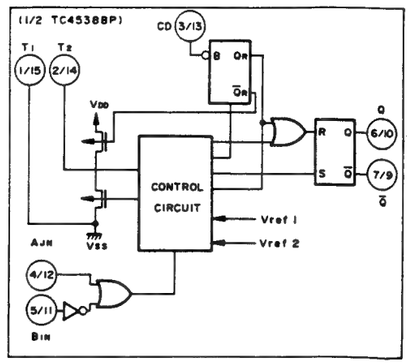

INPUT			OUTPUT		NOTE
AIN	BIN	CD	Q	$\overline{Q}$	
∫	H	H	⊓	⊔	OUTPUT ENABLE
∫	L	H	L	H	INHIBIT
H	∫	H	L	H	INHIBIT
L	∫	H	⊓	⊔	OUTPUT ENABLE
*	*	L	L	H	INHIBIT

* Don't Care

— TK15021 —
Analog Switch

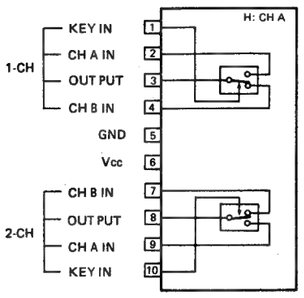

— UPC1531HA —
VTR FM Audio PB Head Amp

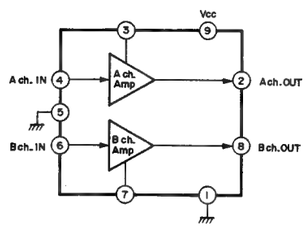

— UPC358C —
Dual Operation Amplifier

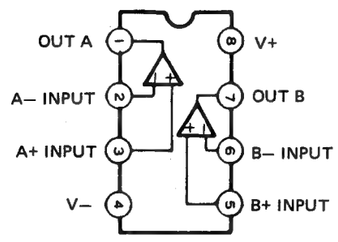

— UPD7564G —
1chip-4bit Microcomputer

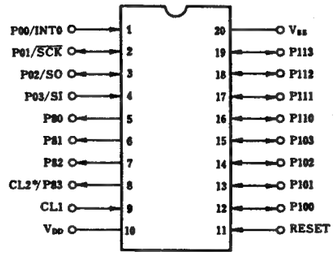

— VC2031DP —
Sub Emphasis Circuit

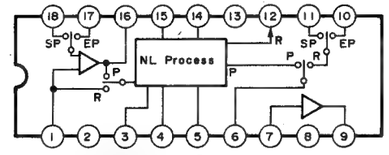

[Terminal Description]

Pin No.	Description	Pin No.	Description
1	Input	10	EP Feedback In
2	$\overline{\text{Rec}}$/P.B.	11	SP Feedback In
3	Limiter Bias	12	F Amp Out
4	Limiter Bias	13	GND
5	SP/$\overline{\text{EP}}$	14	D Amp In
6	SW3 Out	15	C Amp Out
7	Gain Amp In & Output Select	16	A Amp Out
8	Vcc	17	EP Feedback In
9	Output	18	SP Feedback In

— VC2061 —
Cross Talk Cancel Circuit

— VC2074 —
S-VHS Detector

— 7VT05 —
Driver

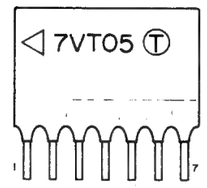

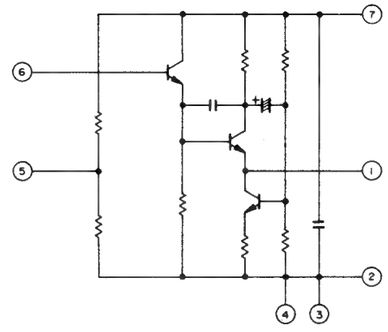

— VC2032 —

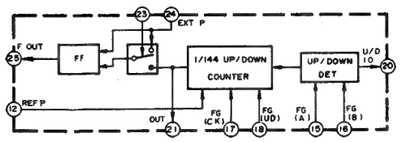

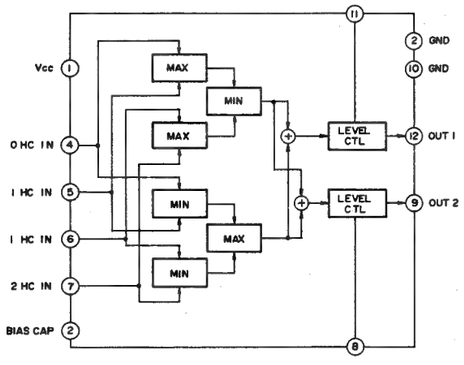

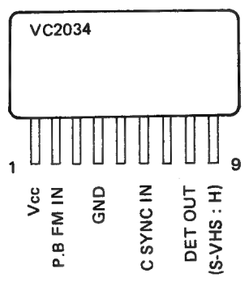

— 8VT15 —

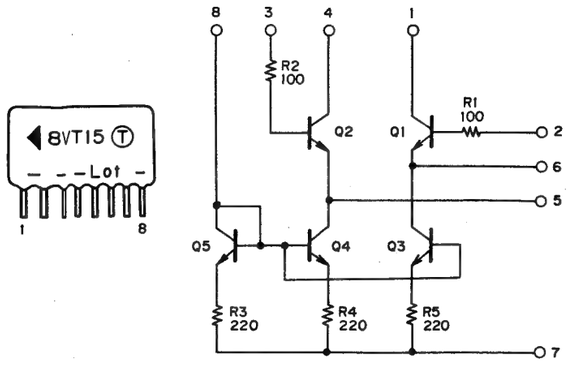

4-90

SECTION 5
EXPLODED VIEWS AND PARTS LIST

SAFETY PRECAUTION

Parts identified by the ⚠ symbol are critical for safety.
Replace only with specified part numbers.

Page

5.1 STANDARD PART NUMBER CODING
- 5.1.1 Screw coding . . . . . 5 - 2
- 5.1.2 Fuse coding . . . . . 5 - 2

5.2 EXPLODED VIEWS AND PARTS LIST
- 5.2.1 Packing assembly . . . . . 5 - 3
- 5.2.2 Cabinet assembly . . . . . 5 - 4
- 5.2.3 Chassis assembly . . . . . 5 - 6
- 5.2.4 Frame assembly . . . . . 5 - 8
- 5.2.5 Mounting bracket assembly 5-10
- 5.2.6 Rear bracket assembly 5-12
- 5.2.7 Main-deck (1) assembly 5-14
- 5.2.8 Main-deck (2) assembly 5-16
- 5.2.9 Sub-deck assembly 5-18
- 5.2.10 Drum assembly 5-20
- 5.2.11 Cassette housing assembly 5-20
- 5.2.12 Front panel assembly 5-22

5-1

5.1 STANDARD PART NUMBER CODING

5.1.1 Screw coding

Standard screw part numbers are as follows.

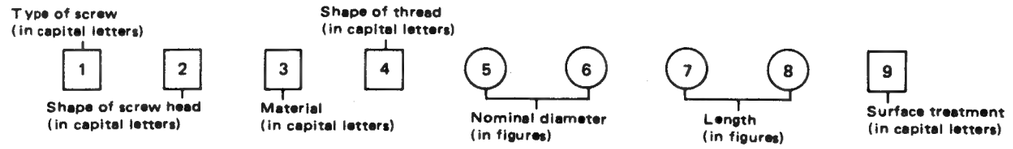

Type of screw (first digit)

- S Normal screws
- D Assembled machine screws (with plain and spring washers)
- L " (with spring washer)
- N " (with plain washer)
- F Feather screws
- G Washer head tapping screws
- M Wood screws

Shape of screw head (second digit)

- B Brazier head
- D Binding head
- H Oval countersunk head
- P Pan head
- R Round head
- S Flat head
- T Truss head
- W Washer head (machine screws)
- X Toothed head

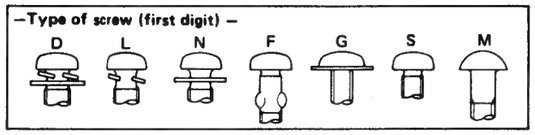

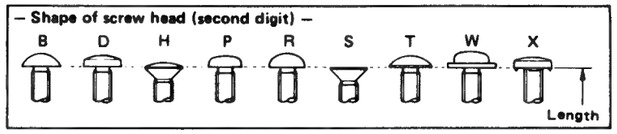

Material (third digit)

- S Steel
- E Stainless steel
- C Cast iron
- U Copper
- B Brass
- P Phosphor bronze
- N Nickel silver
- Y Cast brass
- A Aluminum
- Z Zinc alloy
- K Polycarbonate

Shape of thread (fourth digit)

- P Cross recessed head screws
- (–) Slotted head machine screws
- X Slotted-cross recessed head machine screws
- K Cross recessed head machine screws for precision equipment (type 1)
- H " (type 3)
- A Cross recessed head tapping screws (type 1)
- B " (type 2)
- C " (type 3)
- E Cross recessed head special tapping screws (brand : evertight)
- F " (brand : P-tight)
- T " (brand : taptight)
- G "

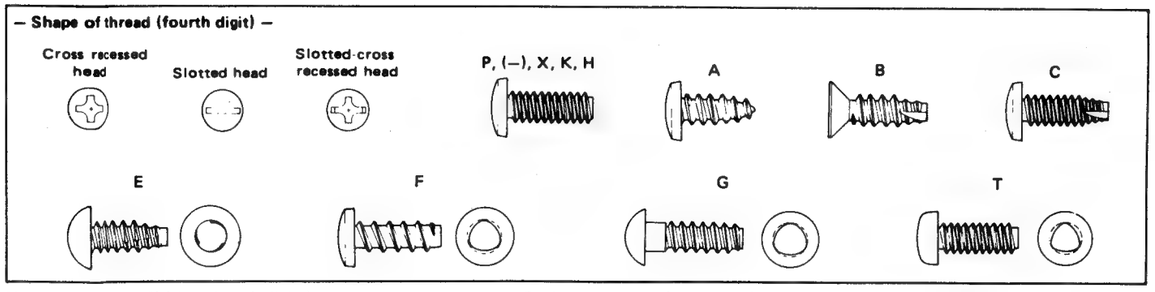

Nominal diameter (fifth and sixth digits)

The fifth and sixth digits are numbers indicating a nominal diameter or dimension. If the dimension exceeds 10 mm, three digits are used. The number indicates a nominal diameter or dimension, given in millimeters, multiplied by ten.

Length (seventh and eighth digits)

The seventh and eighth digits are numbers indicating length in milimeters. The preceding figure is zero when the dimension is smaller than 10 mm. For machine screws used in precision equipment whose length is given in units of 0.1 mm, the number indicates ten times the size of their length.

Surface treatment (ninth digit)

- Z Dichromate treatment after galvanizing (MFZn Ⅱ-C)
- N Nickel plating (MFNi Ⅱ, MFNi Ⅰ)
- R Chromium plating (MBCr Ⅱ, MBCr Ⅰ)
- G Silver plating (SP4)
- B Black coating after plating
- F Blackening of iron (FB)
- M Blackening after galvanizing
- K Pickling of brass (PF2)
- P Phosphate treatment
- W Uni-chrome plating
- L Coating with transparent paint
- A Coloring red after galvanizing (MFZn Ⅱ-C)
- C Coloring blue after galvanizing (MFZn Ⅱ-C)
- T Coloring green after galvanizing (MFZn Ⅱ-C)
- V Coloring purple after galvanizing (MFZn Ⅱ-C)

5.1.2 Fuse coding

Standard fuse part numbers are as follows.

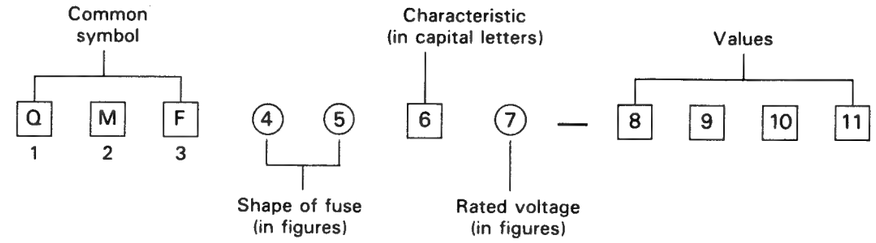

Shape of fuse (fourth and fifth digits)

- 51 ϕ5.2×20 mm
- 60 ϕ6.4×30 mm
- 61 ϕ6.35×31.8 mm
- 63 ϕ6.4×30 mm with lead wires
- 66 ϕ6.35×31.8 mm with lead wires
- 00 Special type

Rated voltage (seventh digit)

- 1 AC125 V
- 2 AC250 V
- 3 0.1–1 A : AC250 V
  1.25–6.3 A : AC125 V

Values (eighth-tenth or eleventh digits)
example:

- R63 ..... 0.63 A
- 1R0 ..... 1.0 A
- 2R5 ..... 2.5 A
- 100 ..... 10 A
- R315 ..... 0.315 A
- 1R25 ..... 1.25 A

Characteristics (sixth digit)

Symbol	Fusing Current	Fusing Time	Remarks
A	210 %	Within 2 min.	Anti-rush type (for Europe)
	275 %	0.6 – 10 sec.	
	400 %	0.15 – 3 sec.	
	1000 %	0.02 – 0.3 sec.	
B	210 %	Within 30 min.	Regular fusible type (for SEMKO, Europe)
	275 %	0.05 – 2 sec.	
	400 %	0.01 – 0.3 sec.	
C	135 %	Within 1 hr.	Regular fusible type (for UL, Japan)
	200 %	Within 2 min.	
E	210 %	Within 2 min.	Anti-rush type (for Europe)
	275 %	0.6 – 10 sec.	
	400 %	0.15 – 3 sec.	
	1000 %	0.02 – 0.3 sec.	
J	135 %	Within 1 hr.	Anti-rush type
	200 %	Within 2 min.	
M	135 %	Within 1 hr.	Regular fusible type (for UL)
	200 %	Within 2 min.	
R	160 %	Within 1 hr.	Regular fusible type
	200 %	Within 2 min.	
S	160 %	Within 1 hr.	Anti-rush type
	200 %	Within 2 min.	
	700 % – 2000 %	Within 0.01 sec.	
U	135 %	Within 1 hr.	Anti-rush type (for UL)
	200 %	Within 2 min.	
	800 % – 2000 %	Within 0.01 sec.	

5-2

5.2 EXPLODED VIEWS AND PARTS LIST

5.2.1 Packing assembly M1

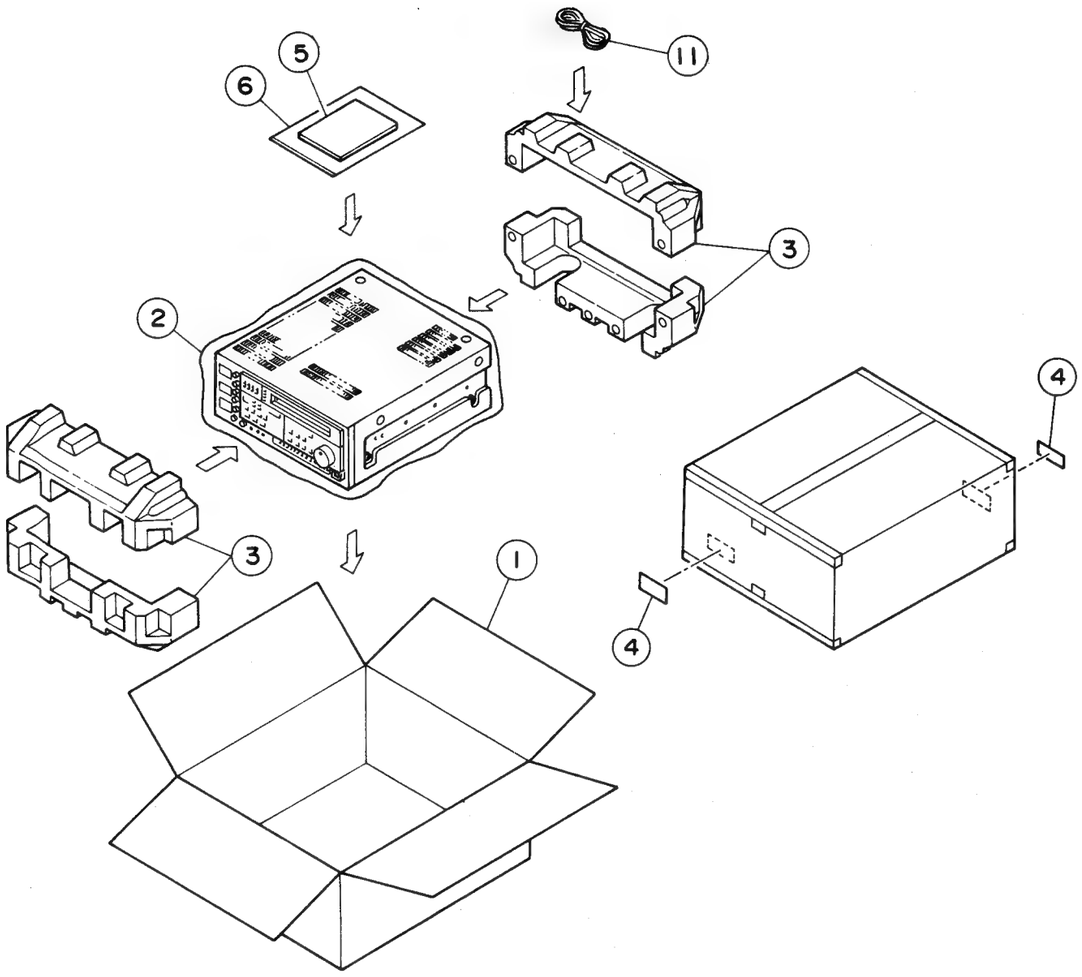

#⚠	REF NO.	PART NO.	PART NAME, DESCRIPTION
			1. PACKING ASSEMBLY <M1>
	1	PGD20149-10	PACKING CASE
	2	PGD30005-03	POLY BAG
	3	PGD10108A-04	CUSHION ASSEMBLY
	4	PUP40619	SERIAL NO.STICKER
	5	PGD30002-133	INSTRUCTIONS
	6	QPGB024-03404	POLY BAG
	11	PGZ00752-01-01	CABLE ASSY

- When shipped from the factory the switches and VR's are set as shown below tables.

FRONT PANEL	
VIDEO LEVEL VR	CENTER
TRACKING VR	CENTER
NORMAL AUDIO REC LEVEL VR	
RIGHT	CENTER
LEFT	CENTER
HiFi AUDIO REC LEVEL VR	
RIGHT	CENTER
LEFT	CENTER
PHONES LEVEL VR	CENTER
SEARCH VR	CENTER (STILL)
AUDIO MONITOR SELECT SW	MIX/HiFi
VIDEO INPUT SW	Y/C 443
REC MODE	S-VHS

(Inside switch cover)	
REMOTE SW	LOCAL
AUTO MODE SW	OFF
SYNC SW	VIDEO
FRAME SERVO SW	ON
Y/C 627 OUT SW	S-VHS
VIDEO DUB SW	OFF
VIDEO AGC SW	ON
NORMAL LINE OUT	NORM
HiFi REC SW	ON
NR SW	ON
LIMITER SW	ON
REAR PANEL	
TIMER SW	OFF
TIME CODE SW	AUD-2
TBC SW	OFF
AUDIO INPUT SELECT SW	SEP
VOLTAGE SELECTOR	240 V

5-3

5.2.2 Cabinet assembly M 2

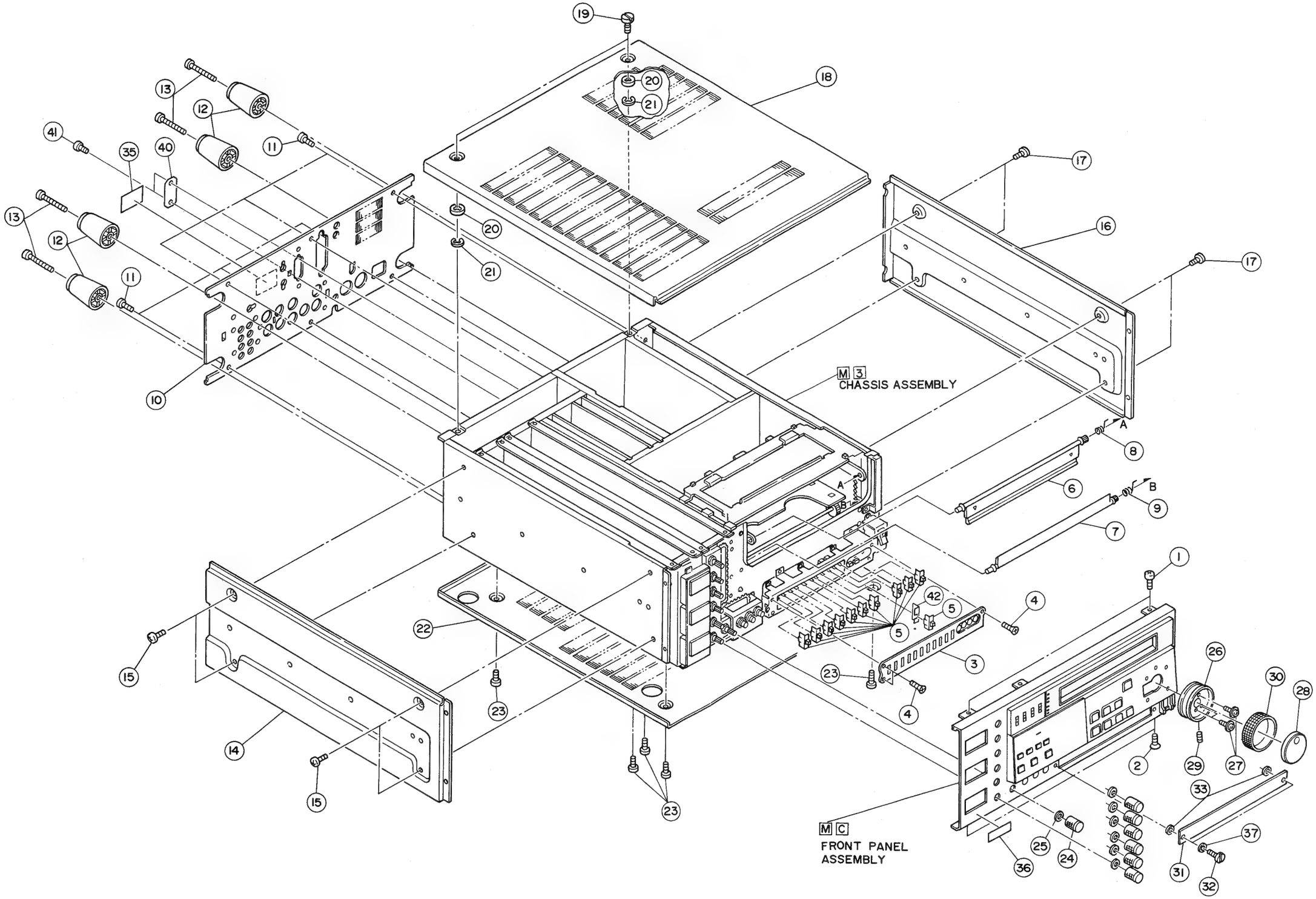

#⚠	REF NO.	PART NO.	PART NAME, DESCRIPTION
			2. CABINET ASSEMBLY <M2>
	1	SDSP3006R	SCREW,X2
	2	SSSP3006R	SCREW,X2
	3	PGD30431-04	SW PANEL
	4	SSSP2006M	SCREW,X3
	5	PGD40422	SLIDE KNOB(B),X11
	6	PRD30181B	U.DOOR ASS'Y
	7	PQ30030-8-15	LOWER DOOR
	8	PQ40104-2	UPPER TORSION SPRING
	9	PQ40472	LOWER TORSION SPRING
	10	PGD20203-06	REAR PANEL
	11	SDSP3006M	SCREW,X6
	12	QZF2319-001	FOOT,X4
	13	SDSP4018M	SCREW,X4
⚠	14	PGD10106-01-03	LEFT SIDE COVER
	15	SDSP4008R	SCREW,X4
⚠	16	PGD10107-01-03	RIGHT SIDE COVER
	17	SDSP4008R	SCREW,X4
⚠	18	PGD20150B	TOP COVER ASSEMBLY
	19	PGD40813	SCREW,X2
	20	PGD40255-02	SPACER,X2
	21	REE3000	E WASHER,X2
⚠	22	PGD10104-02	BOTTOM COVER
	23	SBST3006Z	TAPPING SCREW,X5
	24	PGD40249A	VR KNOB(A) ASSEMBLY,X7
	25	PGD40292	FELT WASHER,X7
	26	PRD30196	SEARCH KNOB
	27	DPSP2005Z	SCREW,X3
	28	PRD41819A	JOG KNOB ASSEMBLY
	29	YWS3004B	SET SCREW
	30	PRD41818	TIRE
	31	PGD20204-06	SW COVER
	32	PGD40862	COIN SCREW,X2
	33	PUM30017-6	SPACER, X2
	35	PGD30021-13	SERIAL NO PLATE
	36	PQ40111-1-5	S NO PLATE
	37	Q03093-825	WASHER,X2
	40	PRD42224	COVER
	41	SDSP2606M	SCREW, X2
	42	PRD42475	KNOB LOCK

5-5

5.2.3 Chassis assembly [M][3]

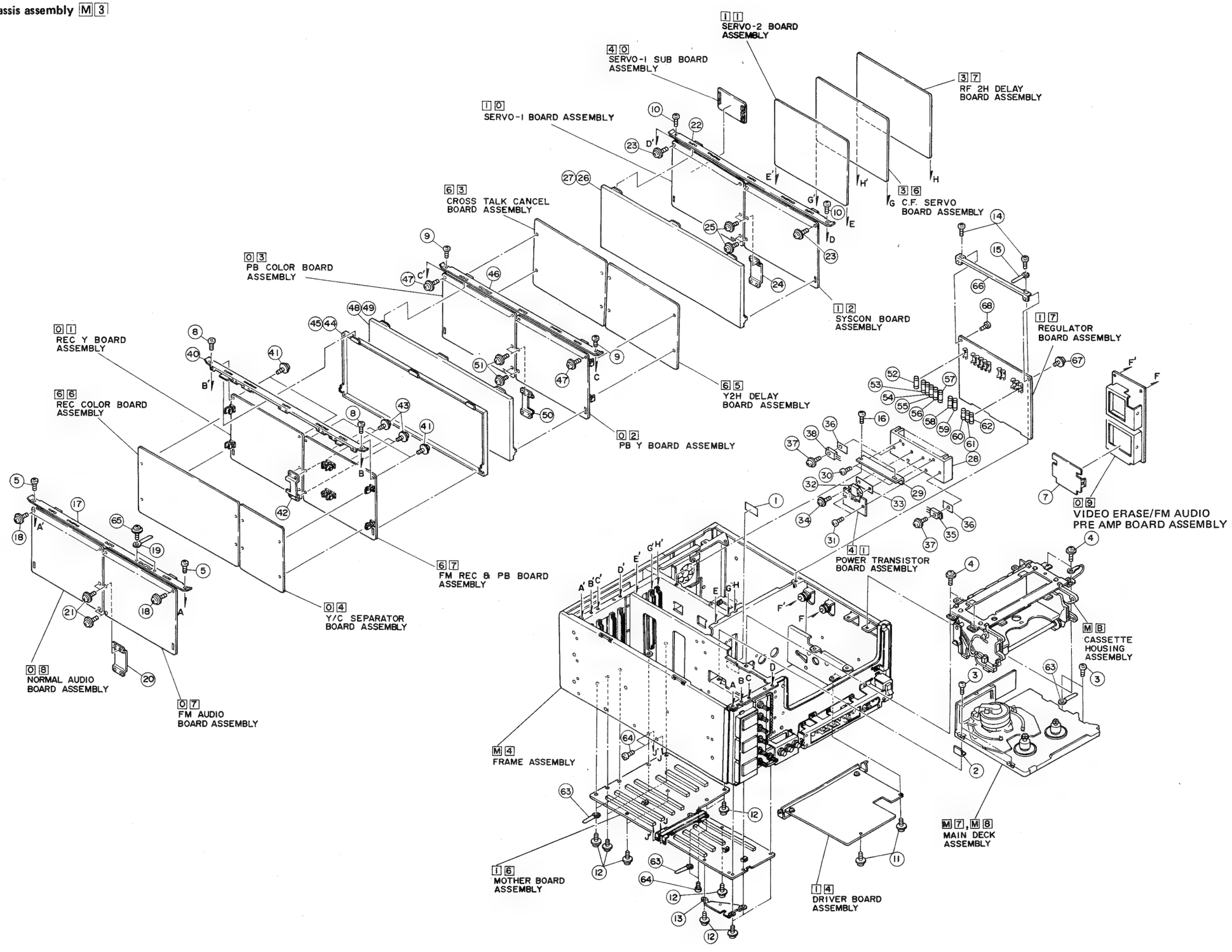

5-6

#⚠	REF NO.	PART NO.	PART NAME, DESCRIPTION
			********** 3. CHASSIS ASSEMBLY <M3> **********
	1	PU42091	NO.PLATE
	2	PGD40822	SPACER
	OR	PGD40822-02	SPACER
	3	LPSP3008Z	ASSY SCREW, X4
	4	DPSP3008Z	SCREW, X4
	5	SBST3006Z	SCREW, X2
	7	PRD30275	SHIELD COVER
	8	SBST3006Z	SCREW, X2
	9	SBST3006Z	SCREW, X2
	10	SBST3006Z	SCREW, X2
	11	GBST3008Z	SCREW, X3
	12	GBST3008Z	SCREW, X14
	13	PRD42127	SPACER
	14	SBST3006Z	SCREW, X2
	15	PU49485-2	WIRE CLAMP
	16	GBST3008Z	TAPPING SCREW, X2
	17	PGD20137-01-04	PWB BRACKET(C)
	18	GBST3006Z	TAPPING SCREW,X4
	19	PU49485-2	WIRE CLAMP,X2
	20	PGD40680	PWB BRACKET(A)
	21	GBST3006Z	TAPPING SCREW,X4
	22	PGD20137-01-04	PWB BRACKET(C)
	23	GBST3006Z	TAPPING SCREW,X4
	24	PGD40680	PWB BRACKET(A)
	25	GBST3006Z	TAPPING SCREW,X4
	26	PGD30400	INSULATOR
	27	PGD20156-01-02	SHIELD CASE(E)
	28	PRD30286	HEAT SINK
	29	PGD30375-01-01	HEAT SINK BRACKET
	30	LPSP3008Z	SCREW,X2
	31	SDSP3012Z	SCREW,X2
	32	STR9012	IC
	33	PGZ00151	TRANSISTOR SPACER
	34	SDSP3012Z	SCREW,X2
	35	SI-3522V	IC
	36	PGZ00171	INSULATOR,X2

#⚠	REF NO.	PART NO.	PART NAME, DESCRIPTION
	37	SDSP3012Z	SCREW, X2
	38	SI-3522V	IC
	40	PGD20137-01-04	PWB BKT(C)
	41	GBST3006Z	SCREW, X4
	42	PGD40680-02	PWB BKT(A)
	43	GBST3006Z	SCREW, X4
	44	PGD20148-01-02	SHIELD CASE(A)
	45	PGD30400	INSULATOR
	46	PGD20137-01-04	PWB BKT(C)
	47	GBST3006Z	SCREW, X4
	48	PGD20156-01-02	SHIELD CASE(E)
	49	PGD30400	INSULATOR
	50	PGD40680-02	PWB BKT(A)
	51	GBST3006Z	SCREW, X4
⚠	52	QMF51E2-5R0	FUSE (F003)
⚠	53	QMF51E2-R80	FUSE (F004)
⚠	54	QMF51E2-2R5	FUSE (F005)
⚠	55	QMF51E2-1R0	FUSE (F006)
⚠	56	QMF51E2-1R0	FUSE (F007)
⚠	57	QMF51E2-1R6	FUSE (F008)
⚠	58	QMF51E2-1R6	FUSE (F009)
⚠	59	QMF51E2-1R0	FUSE (F010)
⚠	60	QMF51E2-2R5	FUSE (F011)
⚠	61	QMF51E2-2R0	FUSE (F012)
⚠	62	QMF51E2-5R0	FUSE (F013)
	63	PU49485-4	WIRE CLAMP, X4
	64	SBST3006Z	SCREW, X4
	65	SBST3006Z	TAPPING SCREW,X2
	66	PGD30372	PWB BRACKET
	67	GBST3006Z	TAPPING SCREW
	68	SBST3006Z	TAPPING SCREW

5-7

5.2.4 Frame assembly M 4

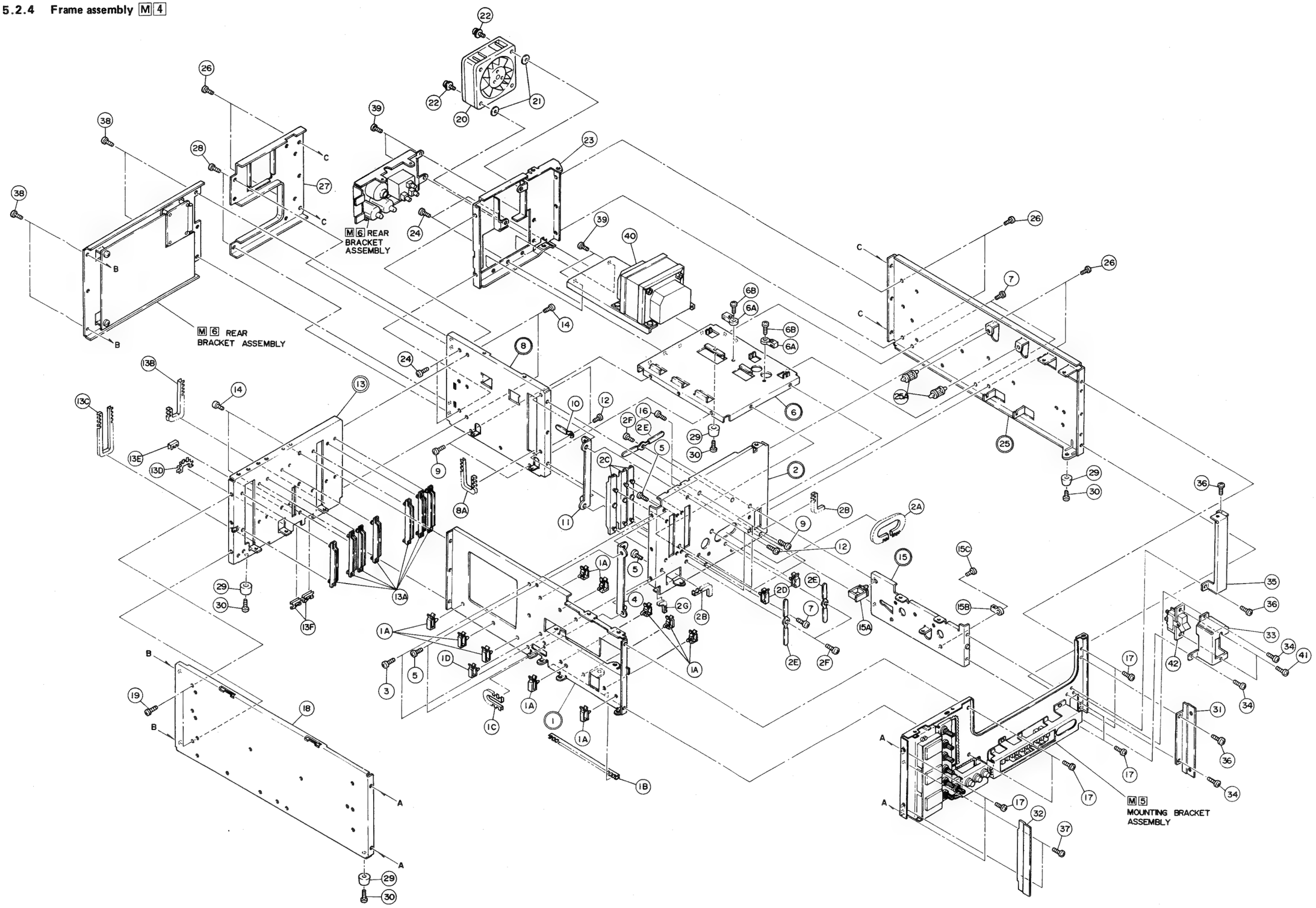

4. FRAME ASSEMBLY <M4>

#⚠	REF NO.	PART NO.	PART NAME, DESCRIPTION
	1	PGD20161B-06	CENTER STAY ASSEMBLY
	1A	PU48016-2	MINI CLAMP,X10
	1B	PU43172-9-170	NYLON GROMMET
	1C	PU43172-9-60	NYLON GROMMET
	1D	PU48016	MINI CLAMP
	2	PGD20152B-08	REAR FRAME(A) ASSEMBLY
	2A	PU43172-9-120	NYLON GROMMET
	2B	PU43172-9-60	NYLON GROMMET,X2
	2C	PGZ00493-02	GUIDE RAIL,X3
	2D	PU48016-2	MINI CLAMP,X2
	2E	PU49486	WIRE CLAMP,X3
	2F	SBST3006Z	TAPPING SCREW,X3
	2G	PU43172-9-30	NYLON GROMMET
	3	SBST3006Z	TAPPING SCREW,X2
	4	PGD40700	REINFORCE BRACKET
	5	SBST3006Z	TAPPING SCREW,X4
	6	PGD20162A-01	TRANS FRAME ASSEMBLY
	6A	PU43981	HOLDER,X2
	6B	SBST3006Z	TAPPING SCREW,X2
	7	SBST3006Z	TAPPING SCREW,X4
	8	PGD20153A-02	POWER FRAME ASSEMBLY
	8A	PU43172-9-70	NYLON GROMMET
	9	SBST3006Z	TAPPING SCREW,X4
	10	PU49485-2	WIRE CLAMP
	11	PGD40700	REINFORCE BRACKET
	12	SBST3006Z	TAPPING SCREW,X4
	13	PRD20095A-01	REAR FRAME ASSEMBLY
	13A	PGZ00493-02	GUIDE RAIL,X7
	13B	PU43172-9-100	NYLON GROMMET
	13C	PU43172-9-200	NYLON GROMMET
	13D	PU43172-9-35	NYLON GROMMET
	13E	PU43172-9-08	NYLON GROMMET
	13F	PU48086	EDGE SADDLE,X2
	14	SBST3006Z	TAPPING SCREW,X4
	15	PGD30392A-02	RIGHT STAY ASSEMBLY
	15A	PU54969	WIRE CLAMP
	15B	PU43981	HOLDER
	15C	SBST3006Z	TAPPING SCREW
	16	SBST3006Z	TAPPING SCREW,X2
	17	SBST3006Z	SCREW, X8
	18	PGD10102-02	LEFT SIDE FRAME
	19	SBST3006Z	TAPPING SCREW,X2
	20	PGZ00708	FAN MOTOR
OR		PGZ01136	FAN MOTOR
	21	PGD40106	SPACER,X2
	22	DPSP3030Z	SCREW,X2
	23	PGD20140	REAR FRAME(B)
	24	SBST3006Z	TAPPING SCREW,X4
	25	PGD20164A-02	R.SIDE FRAME ASSEMBLY
	25A	PU52455	P C SUPPORT,X2
	26	SBST3006Z	TAPPING SCREW,X6
	27	PGD20158-01-02	REAR BRACKET(A)
	28	SBST3006Z	TAPPING SCREW,X2
	29	QZF2115-002	FOOT,X4
	30	SBST3010Z	TAPPING SCREW,X4
	31	PGD30393	ANGLE BRACKET(R)
	32	PGD30394	ANGLE BRACKET(L)
	33	PGD40851	POWER SW BRACKET
	34	SBST3006Z	TAPPING SCREW,X3
	35	PGD40852	FRNT PANEL BRACKET
	36	SBST3006Z	TAPPING SCREW,X3
	37	SBST3006Z	TAPPING SCREW,X2
	38	SBST3006Z	SCREW, X4
	39	SBST3006Z	TAPPING SCREW,X4
	40	PGZ00990A	P.TRANS ASS'Y
	41	LPSP3006Z	TAPPING SCREW,X2
	42	PGZ00479	SEESAW SWITCH,POWER SW

5.2.5 Mounting bracket assembly [M][5]

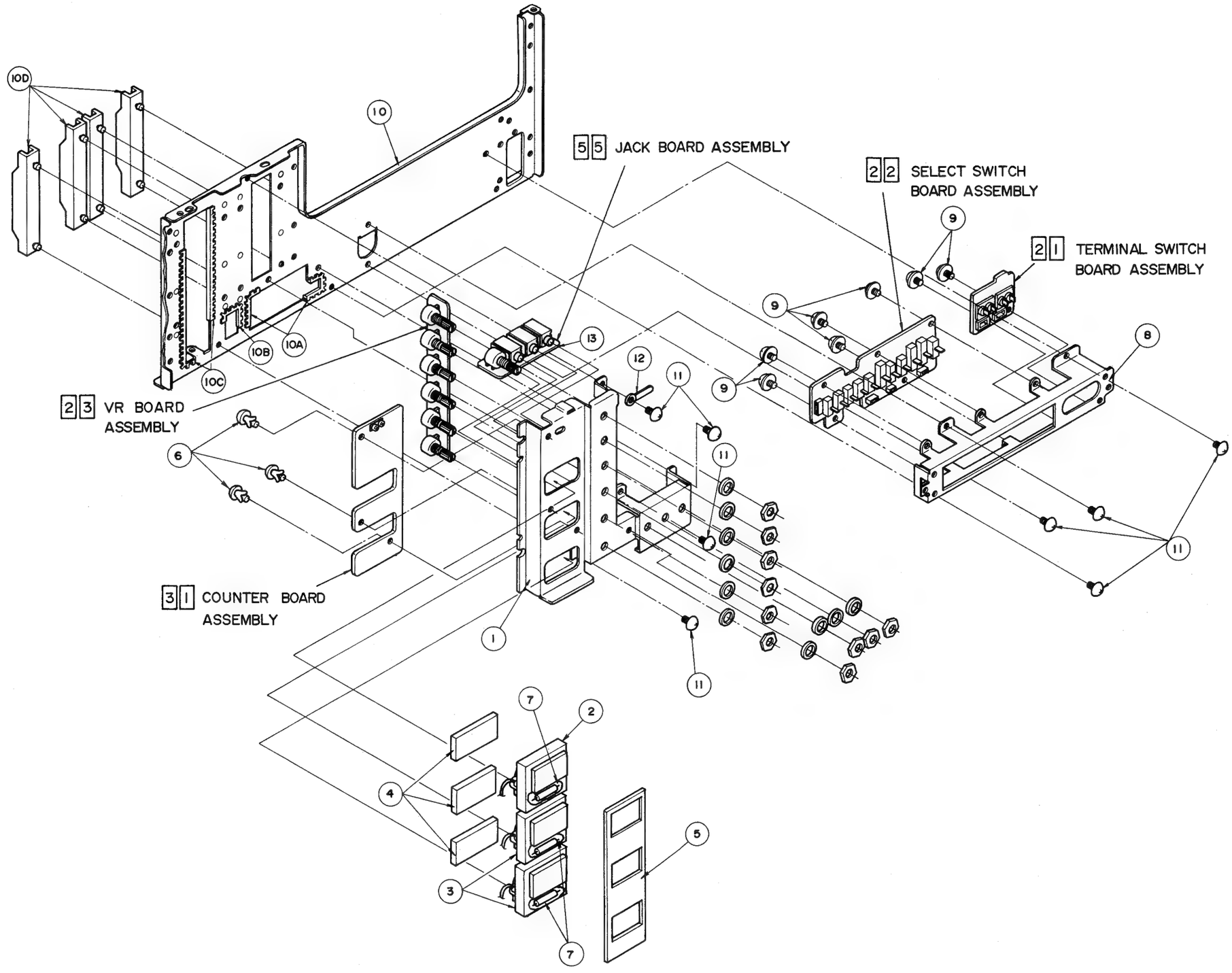

5-10

#⚠	REF NO.	PART NO.	PART NAME, DESCRIPTION

5. MOUNTING BRACKET ASSEMBLY <M5>

1	PGD20205-01-02	VR METER JACK BRACKET
2	PU53866-4	METER(VIDEO/TRACKING)
3	PU53866-5-5	METER (AUDIO),X2
4	PGD40056-03	METER CUSHION,X3
5	PGD40057-02	METER SHEET
6	PGZ00136	PLASTIC RIVET,X3
7	PU53866-LAMP	METER LAMP,X3
8	PGD30429	FRONT SWICH BRACKET
9	SBST3005Z	TAPPING SCREW, X7
10	PGD20200A-02	FRONT BRACKET (2) ASSEMBLY
10A	PU43172-9-40	NYLON GROMMET,X2
10B	PU43172-9-50	NYLON GROMMET
10C	PU43172-9-120	NYLON GROMMET,X2
10D	PGZ00493-02	GUIDE RAIL,X4
11	SBST3006Z	TAPPING SCREW,X8
12	PU49485-2	WIRE CLAMP
13	PRD42261	SHIELD CUSHION

#⚠	REF NO.	PART NO.	PART NAME, DESCRIPTION

****

****
* 6. REAR BRACKET ASSEMBLY <M6> *
****

	1	PGD20201	REAR BRACKET(C)
	2	PGZ00413-02	JACK ASSEMBLY
	3	LPSP3008Z	SCREW,X4
	4	PGZ00221-2	2PIN JACK ASSEMBLY
	5	LPSP3008Z	SCREW,X2
	6	PGZ00414	1PIN JACK ASSEMBLY
	7	LPSP3008Z	SCREW,X2
	8	PGZ00754-02-01	CONNECTOR ASSEMBLY
	9	SBST3006Z	TAPPING SCREW,X3
	10	PGZ00173	7P CONNECTOR, X2
	11	PGZ00174	7P CONNECTOR, X2
	13	PRD42057	15PIN PLATE
	14	SBST3006Z	TAPPING SCREW,X2
	15	PGZ00756	PC SUPPORT,X4
	16	SBST3006Z	TAPPING SCREW,X2
	17	DPSP3010Z	SCREW, X3
⚠	18	PGZ00760	AC INLET
	19	PU52931	CONNECTOR COVER
⚠	20	QMG0301-004	FUSE HOLDER, X2
	21	PU50316	FUSE COVER, X2
	22	PGD30369-02-02	AC BRACKET
	26	DPSP4008N	SCREW
⚠	27	QMF51E2-3R15	FUSE (F001)
	28	PGZ01032	HOUR METER
⚠	29	QMF51E2-1R6	FUSE (F002)
	30	PRD30026-08	COLLAR, X3
	31	PRD42403	SPACER, X4
	32	QSR0085-102	VOLTAGE SELECTO
	33	LPSP3008Z	ASSY SCREW, X2
	34	PU54680	V SELEC COVER

5.2.8 Main-deck (2) assembly M 8

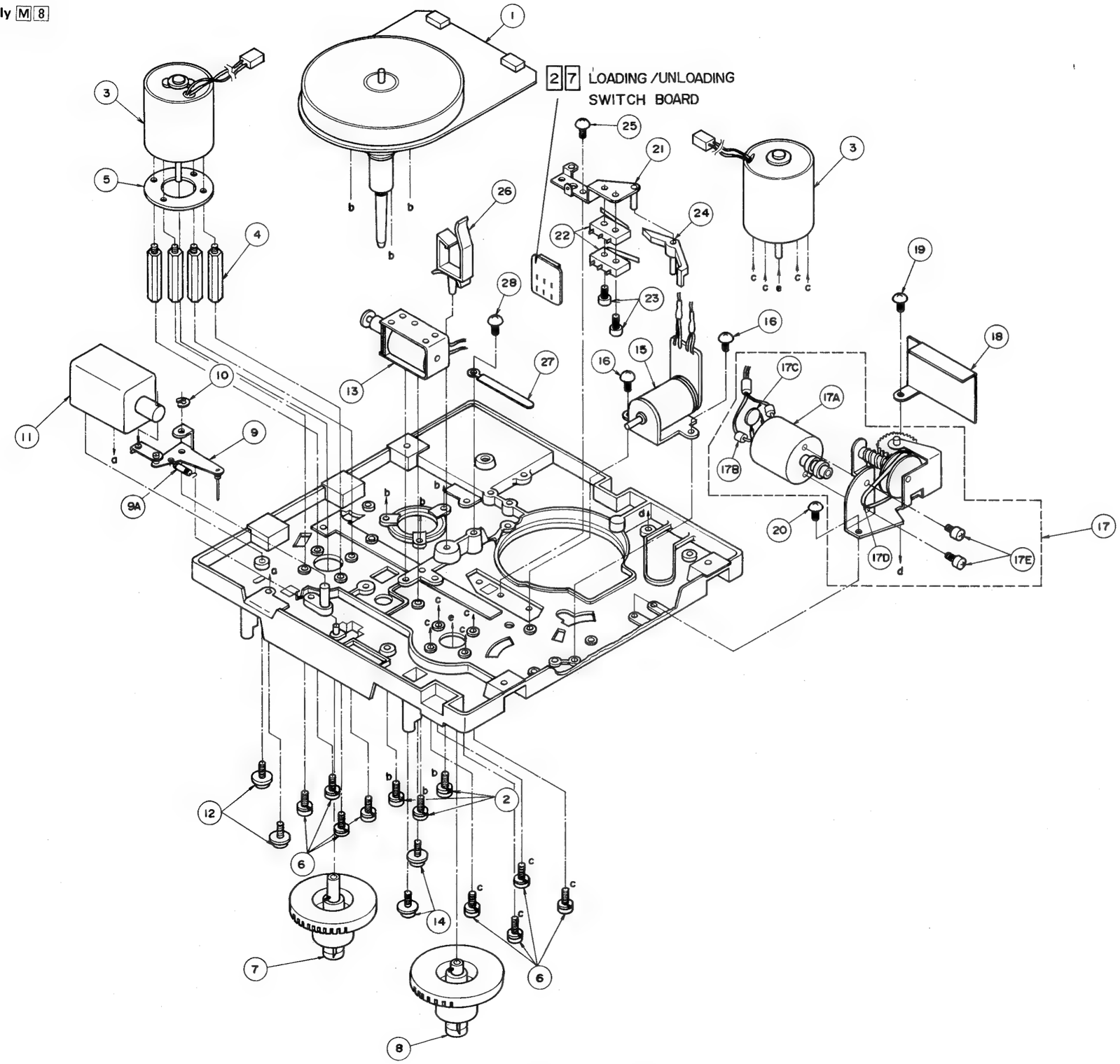

#⚠	REF NO.	PART NO.	PART NAME, DESCRIPTION
	38	PGZ00093	SOLENOID
	39	DPSP3005Z	SCREW,X2
	40	PU51141A	SOLENOID LEVER ASSEMBLY
	41	PU47327	SPACER,X2
	42	PRE3008	SPRING PIN
	43	PU56637B	DEW SENSOR ASSEMBLY
	44	LPSP2606Z	SCREW
	45	PU49485-4	WIRE CLAMP,X2
	46	SBST3006Z	TAPPING SCREW
	47	DPSP3006Z	SCREW
	48	PU55701	TU PHOTO INTERRUPTER ASSY
	49	QCF11HP-223	CAPACITOR
	50	PU55701	SUP PHOTO INTERRUPTER AY
	51	QCF11HP-223	CAPACITOR
	52	SBST3008Z	TAPPING SCREW,X2
	53	PU50581-1-2	TENSION ARM
	54	PU44852-2	TENSION POLE
	55	SSSP2605Z	SCREW
	56	PU50582	DIFFERENTIAL LEVER
	57	LPSP3006Z	SCREW
	58	BYS3006FS	SET SCREW
	59	PRD30024-35	SPRING
	60	Q03093-830	WASHER
	61	REE1500	E WASHER
	62	PRD40004-01-01	ADJUST LEVER
	63	NPSP3008Z	ASSEMBLY SCREW,X2
	64	PRD40005A	F.R.ARM ASSEMBLY
	64A	PUM30001-15	SPRING
	65	REE3000	E WASHER
	66	SBST3006Z	TAPPING SCREW
	67	PRD40008C	BRAKE ARM ASSEMBLY
	67A	PRD30024-30	SPRING
	68	PRD40011B	BRAKE ARM ASSEMBLY
	69	REE3000	E WASHER,X2
	70	PRD42077	CASSETTE HOLDER
	71	PUM30001-44	SPRING
	72	PU59919-1-1	CASSETTE SWITCH
	73	DPSP2608Z	SCREW
	74	SBST3008Z	TAPPING SCREW,X2
	75	SBST3008Z	SCREW, X8
	76	LPSP3004Z	SCREW
	77	PRD40300	EARTH PLATE
	78	SBST3008Z	TAPPING SCREW
	79	PRD40511A-01	BRACKET ASSEMBLY
	80	LPSP3006Z	SCREW
	81	PRD42078A-02	CLEANER ARM ASSEMBLY
	82	REE2500	E WASHER
	83	PRD42118	CLEANER HOLDER
	84	PRD30021-2	WASHER,X2
	85	PRD30024-8	SPRING
	86	PRD40510-01-02	CLEANER
	87	WDL165050	SLIT WASHER
	88	LPSP3010Z	SCREW, X3
	89	PRD42405	ADJUSTER
	90	PRD30023-9	COMPRE.SPRING
	91	PRD41806	COLLAR, X2

5-15

#⚠	REF NO.	PART NO.	PART NAME, DESCRIPTION

****

****
* 7. MAIN DECK (1) ASSEMBLY <M7> *
****

	1	PU21159F-07	MAIN DECK ASSEMBLY
	2	PU50535B	TAKE UP BRAKE ASSY
	2A	PUM30001-47	SPRING
	3	PU50535A	SUPPLY BRAKE ASSEMBLY
	3A	PUM30001-47	SPRING
	3B	PUM30001-46	SPRING
	3C	PUM30001-7	SPRING
	4	REE3000	E WASHER,X2
	5	PU50545A-5	CANCEL LEVER ASSEMBLY
	5A	PUM30001-32	SPRING
	6	REE3000	E WASHER
	7	PU50547A	BACK TENSION LEVER ASSY
	7A	PUM30001-6	SPRING
	8	PU48838D	TAKE UP DRIVE RING ASSY
	8A	PU35005-81	SPRING
	9	PU48837B	SUPPLY DRIVE RING ASSY
	9A	PU35005-81	SPRING
	10	PU48711	PULLEY,X4
	11	PU50758	PULLEY,X2
	12	REE3000	E WASHER,X3
	13	PRD40002A-2	SLIDE BAR ASSEMBLY
	13A	PGD30003-2	SPRING
	14	PUM30013	FRANGE COLLAR,X2
	15	SDST3006Z	TAPPING SCREW,X2
	16	PRD40042A-2	PINCH ROLLER ASSEMBLY
	16A	PQ40137A	PINCH ROLLER ASSEMBLY
	16B	PRD40014A-2	PINCH ROLLER ARM ASSEMBLY
	16C	LPSP2604Z	SCREW
	17	PRD40037	STOP RING
	18	YFS3003S	SET SCREW
	19	PRD42495A	TAPE GUIDE ARM ASSEMBLY
	20	PGD40115-01-01	STUD
	21	PRD30023-8	COMPRESSION SPRING
	22	PU49276	NYLON NUT
	23	Q03093-826	WASHER
	24	Q03093-819	WASHER
	25	LPSP2608Z	SCREW
	26	PGD40114	GUIDE ROLLER
	27	PRD40073	IDLE GEAR
	28	REE2500	E WASHER
	29	PRD42065A	SOLENOIDE BRACKET ASSY
	30	PRD42068A-01	HALF LOADING GEAR ASSY
	31	PRD42073A	GENEVA GEAR ASSEMBLY
	32	REE2500	E WASHER
	33	PRD42096	SPRING LEVER,X2
	34	PRD30023-19	COMPRESSION SPRING
	35	REE2500	E WASHER,X2
	36	PRD42075A	CLEANER LEVER ASSEMBLY
	37	REE2500	E WASHER

5.2.7 Main-deck (1) assembly M 7

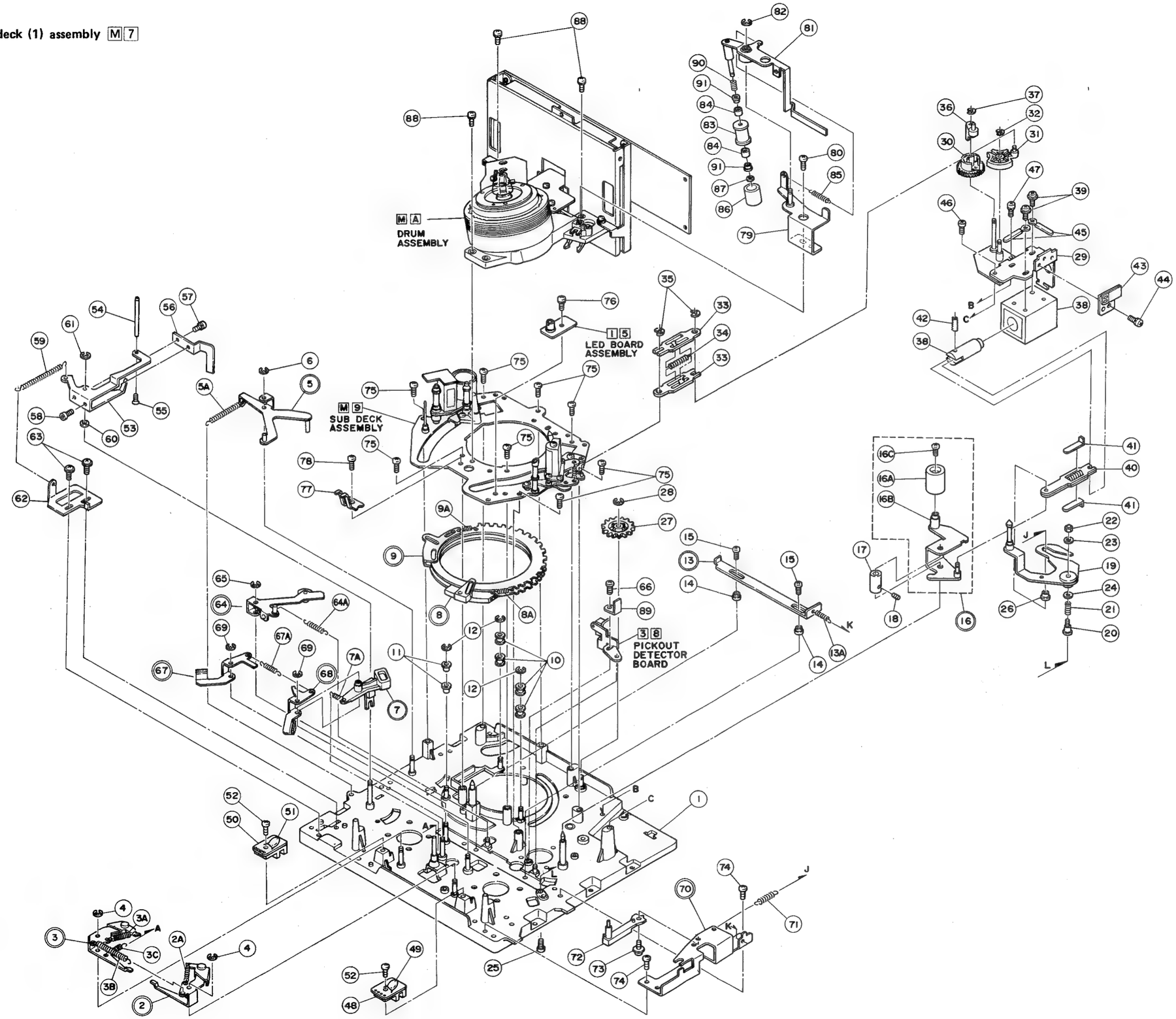

5.2.6 Rear bracket assembly M 6

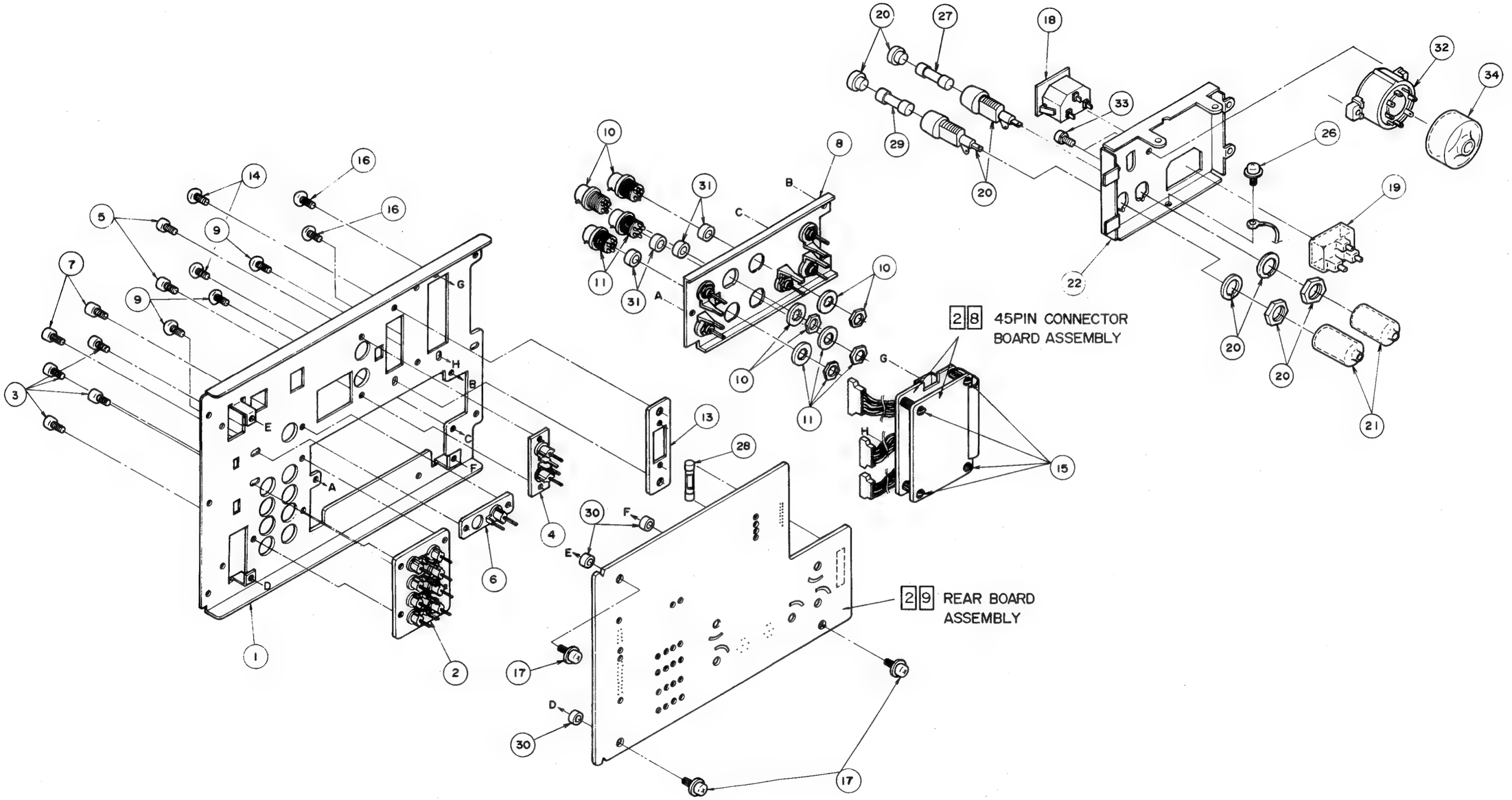

#⚠	REF NO.	PART NO.	PART NAME, DESCRIPTION

8. MAIN DECK (2) ASSEMBLY <M8>

⚠	1	PGZ00735-01-02	CAPSTAN MOTOR
	2	LPSP3008Z	SCREW,X3
⚠	3	PGZ00869	REEL MOTOR,X2
	4	PRD40441	CONNECTING ROD,X4
	5	PRD40525	SPACER
	6	LPSP3006Z	SCREW,X8
	7	PGZ00291A	TAKE UP REEL DISK ASSY
	8	PGZ00095A-1	SUPPLY REEL DISK ASSY
	9	PU50538A	CONNECT LEVER ASSEMBLY
	9A	PUM30001-6	SPRING
	10	REE3000	E WASHER
	11	PGZ00092	SOLENOID(BRAKE TENSION)
	12	DPSP3008Z	SCREW,X2
	13	PGZ00091	BRAKE TENSION SOLENOID
	14	DPSP2608Z	SCREW,X2
	15	PGZ00767A	DIFFERENTIAL TRANS ASSY
	16	SBST3006Z	TAPPING SCREW,X2
⚠	17	PGZ00343A	LOADING DRIVE GEAR ASSY
⚠	17A	PU52745A	DC MOTOR ASSY
	17B	PU45811	FERRITE BEADS,X2
	17C	QCF11HP-473	CAPACITOR
	17D	PU50350	BELT
	17E	LPSP2604Z	SCREW,X2
	18	PGD40135	GEAR COVER
	19	SBST3008Z	TAPPING SCREW
	20	SBST3006Z	TAPPING SCREW
	21	PU48952A-3	SWITCH BRACKET ASSEMBLY
	22	QSM1S11-211	MICRO SWITCH,X2
	23	SPBP2316N	SCREW,X2
	24	PU48955	SWITCH LEVER
	25	SBST3006Z	TAPPING SCREW
	26	PU54969-2	WIRE CLAMP
	27	PU49485-3	WIRE CLAMP
	28	SBST3006Z	TAPPING SCREW

5.2.9 Sub-deck assembly [M] [9]

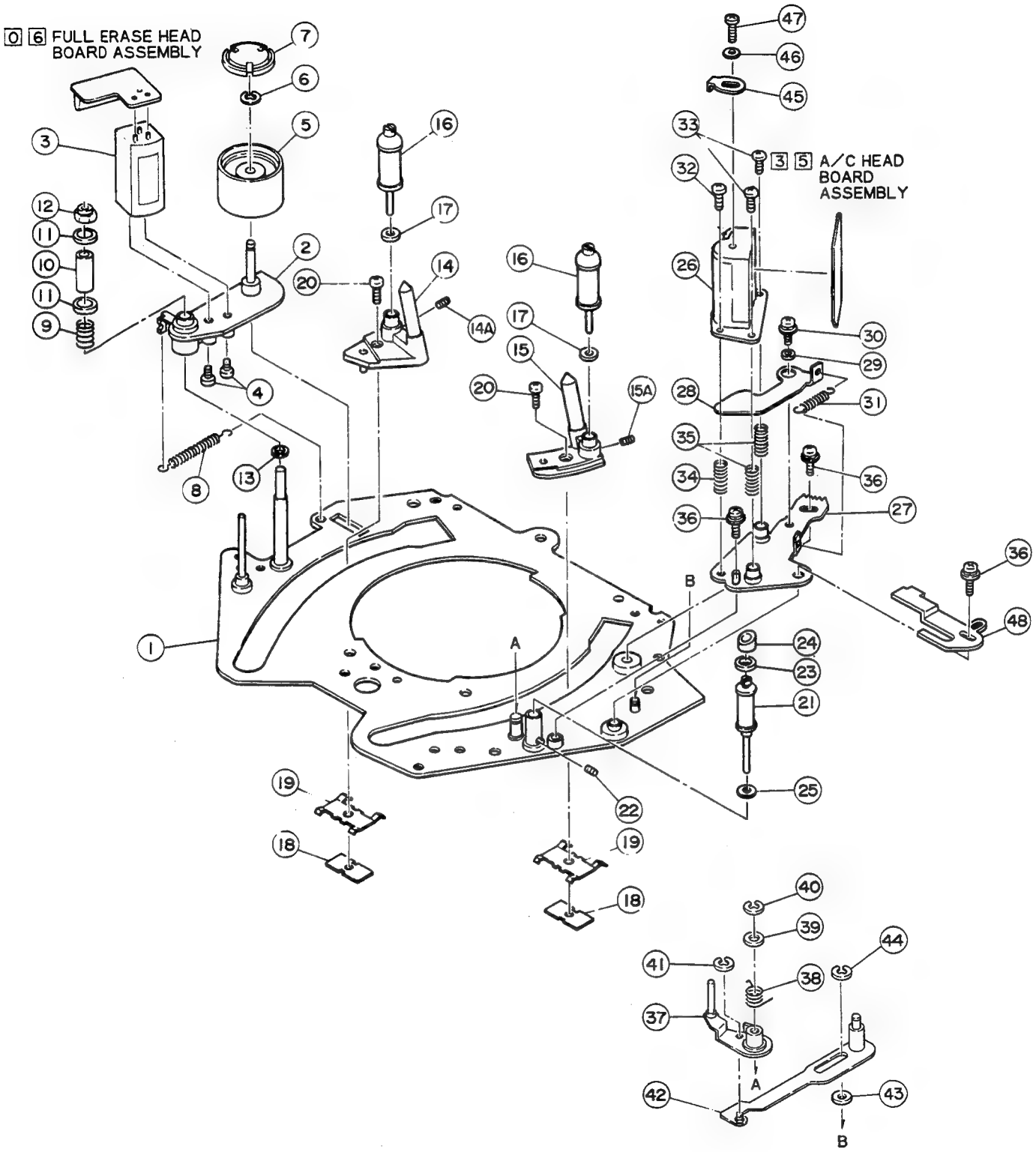

9. SUB DECK ASSEMBLY <M9>

#⚠	REF NO.	PART NO.	PART NAME, DESCRIPTION
	1	PRD30243A	SUB DECK SUB ASSEMBLY
	2	PRD40087B	ERASE HEAD ARM SUB ASSY
	3	PU54397	FULL ERASE HEAD
	4	SSSP2005Z	SCREW,X2
	5	PU51203A	ROLLER ASSEMBLY
	6	REE1500	E WASHER
	7	PU51204	THRUST CAP
	8	PUM30001-13	SPRING
	9	PU30080-69	SPRING
	10	PU53826	GUIDE POLE
	11	PU51294	GUIDE FRANGE,X2
	12	PU49276	NYLON NUT
	13	Q03093-819	WASHER
	14	PRD40522A	SUPPLY POLE BASE ASSY
	14A	YFS3002.5FS	SET SCREW
	15	PRD40523A-01	TAKE UP POLE BASE ASSEMBLY
	15A	YFS3002.5FS	SET SCREW
	16	PGZ00833	GUIDE ROLLER ASSEMBLY,X2
	17	PU48806-3	RUBBER TIRE,X2
	18	PU51638	PLATE,X2
	19	PU51299	SPRING PLATE,X2
	20	SPSP2606Z	SCREW,X2
	21	PGZ01140	G.ROLER ASSY
	22	YFS3002.5S	SET SCREW
	23	Q03093-817	WASHER
	24	PRD40030	CAP
	25	PU48806-3	RUBBER TIRE
	26	PGZ00989	A/C HEAD ASSY
	27	PRD42084A-01	HEAD BASE SUB ASSEMBLY
	28	PRD42086	GUIDE PLATE
	29	PUM30005-12	COLLER
	30	DPSP3006Z	SCREW
	31	PRD30024-24	SPRING
	32	SPSP2610Z	SCREW
	33	SPSP2608Z	SCREW,X2
	34	PGD30004-5	SRPING
	35	PU30080-49	SPRING,X2
	36	DPSP3006Z	SCREW,X3
	37	PRD42087A	HALF LOADING ARM ASSEMBLY
	38	PRD42091	TENSION SPRING
	39	PRD30029-03	WASHER
	40	REE2000	E WASHER
	41	REE1500	E WASHER
	42	PRD42092A	CONNECTOR ARM ASSEMBLY
	43	Q03093-828	WASHER
	44	REE2000	E WASHER
	45	PRS40004	SHIELD
	46	WNS2000N	WASHER
	47	HPSP201.8N	SCREW
	48	PRD42226	STOPPER

5.2.10 Drum assembly [M][A]

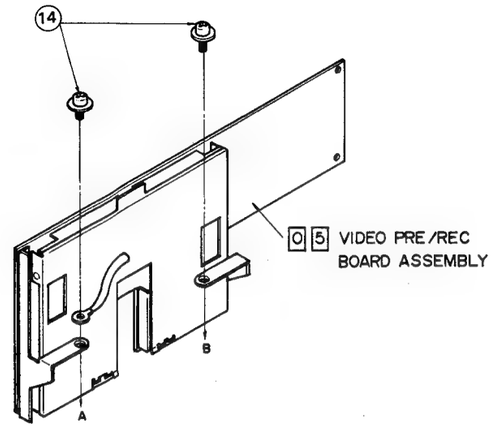

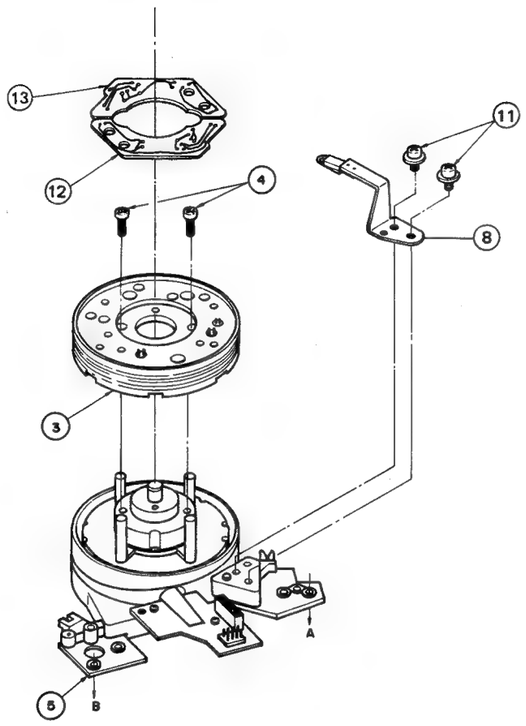

#⚠	REF NO.	PART NO.	PART NAME, DESCRIPTION
**********			
		**********	
		* 10. DRUM ASSEMBLY <MA>	*
		**********	
	3	PDM2103C-6	UPPER DRUM ASSY
	4	PDM4165A	DRUM SCREW ASSY, X2
	5	PDM2090B-5	LOWER DRUM MOTOR ASSY
	8	PDM4162A	BRUSH ASSY
	11	DPSP3006Z	SCREW,X2
	12	PDM3170	UPPER DRUM PWB
	13	PDM3171	UPPER DRUM PWB
	14	DPSP3006Z	SCREW, X2

5.2.11 Cassette housing assembly [M][B]

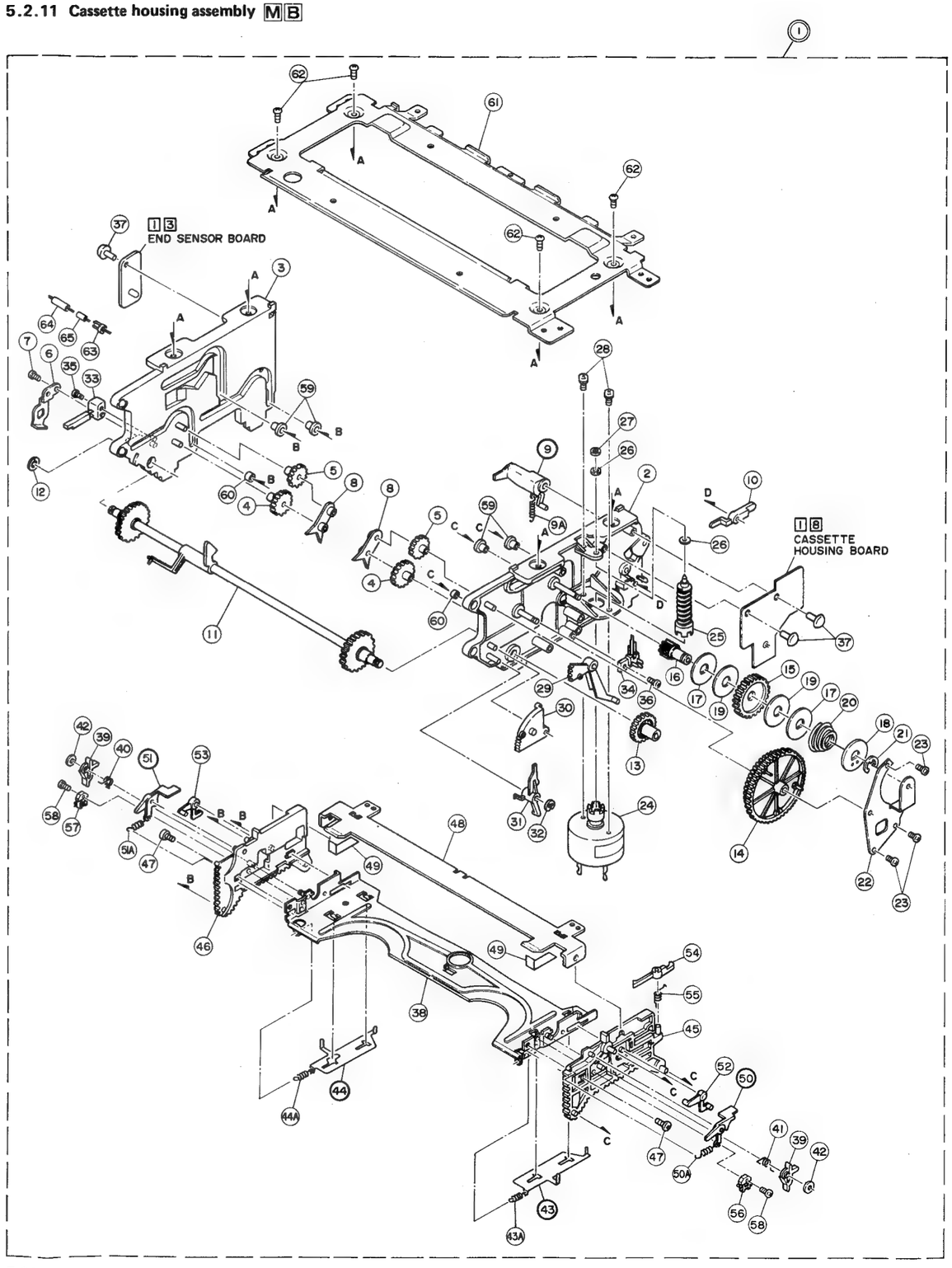

#⚠	REF NO.	PART NO.	PART NAME, DESCRIPTION

11. CASSETTE HOUSING ASSEMBLY <MB>

	1	PGS20108C	CASSETTE HOUSING ASSY
	2	PRD30126A-02	RIGHT GEAR STAY ASSEMBLY
	3	PRD30125A	LEFT GUIDE STAY ASSEMBLY
	4	PQ40059	GEAR (1),X2
	5	PRD40270	GEAR (2),X2
	6	PRD40532	SWITCH COVER
	7	SBSE2608Z	SCREW
	8	PQ40061	DOUBLE CAP,X2
	9	PQ40102A-1	DOOR GUIDE ASSEMBLY
	9A	PUM30001-111	SPRING
	10	PQ40063	GUIDE LEVER
	11	PRD40119A-1	CONNECT GEAR ASSEMBLY
	12	PUM30017-11	SLIT WASHER
	13	PRD40118	CAM GEAR(2)
	14	PRD30124	MAIN GEAR
	15	PRD40527	WARM WHEEL
	16	PRD40529A-01	CLUTCH GEAR ASSEMBLY
	17	PRD40534	CLUTCH DISK,X2
	18	PRD40535	SPRING HOLD PLATE
	19	PRD40537	PAD,X2
	20	PRD40538-01-03	COMPRESSION SPRING
	21	REE6000	E WASHER
	22	PRD40533	GEAR BRACKET
	23	SBSE2608Z	SCREW,X3
⚠	24	PQ40090A	MOTOR ASSEMBLY
	25	PRD40291A	WARM ASSEMBLY
	26	Q03093-838	WASHER,X2
	27	PUM30017	SLIT WASHER
	28	SPSP2604Z	SCREW,X2
	29	PQ40074	UPPER DOOR OPENER
	30	PQ40075-1-5	LOWER DOOR OPENER
	31	PQ40076-2	HOLD LEVER
	32	REE2500	E WASHER
	33	PU51259-3	LEAF SWITCH
	34	PU55377-2	END SWITCH
	OR	PU55377-1-1	END SWITCH
	35	SPSP2010Z	SCREW
	36	SBSE2608Z	SCREW
	37	PU48973-3	STOPPER,X3
	38	PRD30123A	CASSETTE HOLDER ASSEMBLY
	39	PRD30122-01-01	SWITCH LEVER,X2
	40	PRD40539	LEFT TORSION SPRING
	41	PRD40540	RIGHT TORSION SPRING
	42	PUM30017	SLIT WASHER,X2
	43	PQ40106B-1	RIGHT SIDE PLATE ASSEMBLY
	43A	PUM30001-210	SPRING
	44	PQ40107B-2	LEFT SIDE PLATE ASSEMBLY
	44A	PUM30001-210	SPRING
	45	PRD10052	RIGHT BRACKET
	46	PRD10052-02	LEFT BRACKET
	47	SPSP2003Z	SCREW,X2
	48	PQ30032-1-3	REINFORCEMENT
	49	PGD40204	TEPHRON SHEET,X2
	50	PQ40108B-3	RIGHT LOCK LEVER ASSEMBLY
	50A	PUM30001-110	SPRING
	51	PQ40109B-3	LEFT LOCK LEVER ASSEMBLY
	51A	PUM30001-110	SPRING
	52	PQ40081A	RIGHT SWICH LEVER ASSY
	53	PQ40081B	LEFT SWICH LEVER ASSY
	54	PQ40083-1-5	LID OPENER
	55	PQ40084-1-2	TORSION SPRING
	56	PGZ00503	RIGHT INSERT SWICH
	57	PGZ00502	LEFT INSERT SWICH
	58	SPSK1705M	SCREW,X2
	59	PQ40086	ROLLER,X4
	60	PQ40087-2	MINI ROLLER,X2
	61	PRD20034	ROOF PLATE
	62	SBSE2608Z	SCREW,X4
	63	PQ40299	WIRE CLAMP
	64	QXT329H-035	TUBE
	65	PRD40101	WIRE GUARD

5-21

5.2.12 Front panel assembly [M][C]

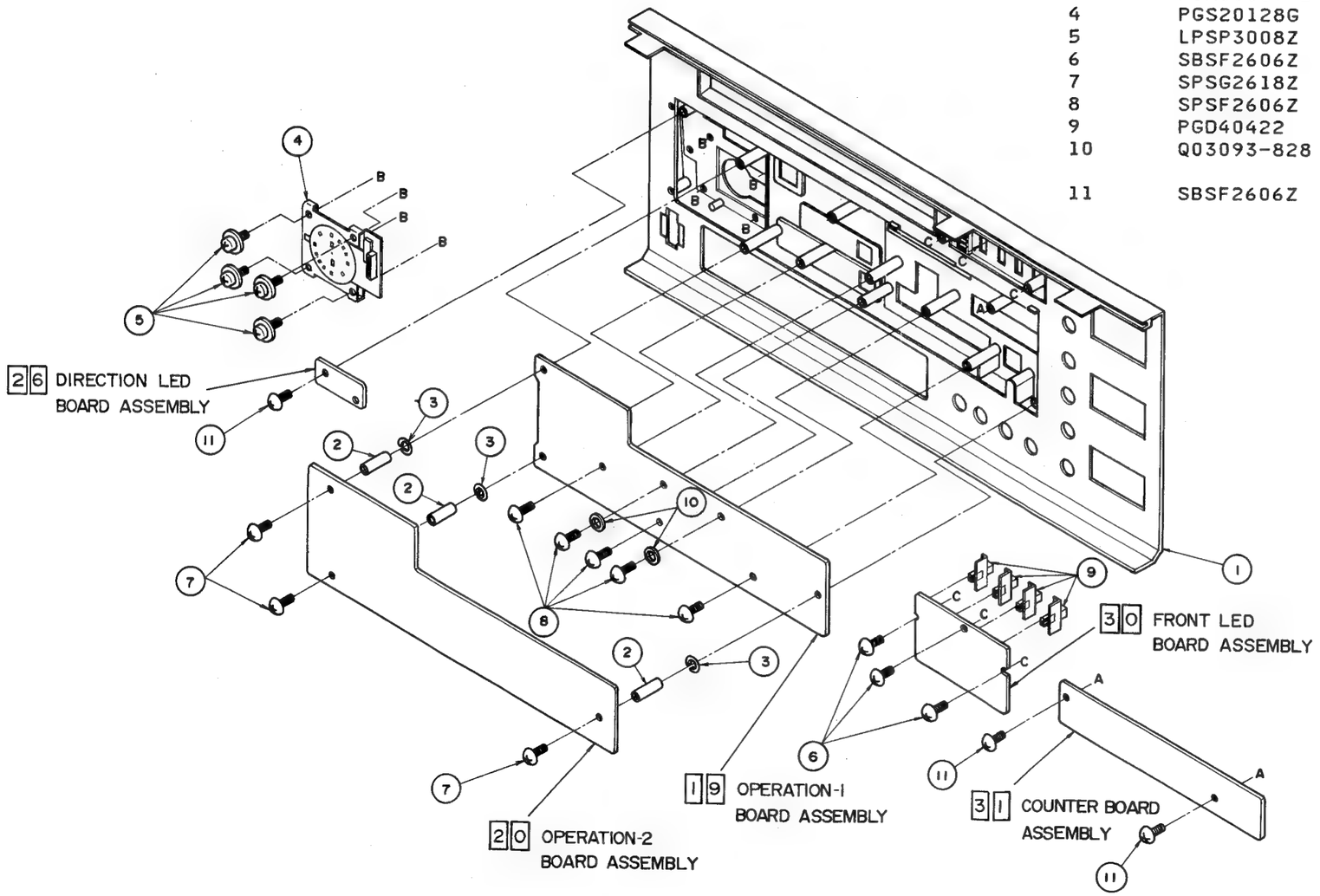

#⚠	REF NO.	PART NO.	PART NAME, DESCRIPTION
			**** 12. FRONT PANEL ASSEMBLY <MC> ****
	1	PGD10125F-09	FRONT PANEL ASSY
	2	PGD40860	COLLAR, X3
	3	PUM30017-5	SLIT WASHER, X3
	4	PGS20128G	SEARCH/JOG CONTROL ASSY
	5	LPSP3008Z	ASSY SCREW, X4
	6	SBSF2606Z	SCREW, X3
	7	SPSG2618Z	SCREW, X3
	8	SPSF2606Z	SCREW, X5
	9	PGD40422	SLIDE KNOB(B),X4
	10	Q03093-828	WASHER, X2
	11	SBSF2606Z	SCREW,X3

5-22

SECTION 6
ELECTRICAL PARTS LIST

SAFETY PRECAUTION

Parts identified by the ⚠ symbol are critical for safety. Replace only with specified part numbers.

ABBREVIATIONS IN THIS LIST ARE AS FOLLOWS:

RESISTORS– All resistance values are in ohms (Ω), unless otherwise indicated.

k	: 1,000 (Kilo)
M	: 1,000,000 (Mega)
Chip R	: Chip Resistor
Chip VR	: Chip Variable Resistor
Comp. R	: Composition Resistor
CR	: Carbon Film Resistor
FR	: Fusible Resistor
MFR	: Metal Film Resistor
MPR	: Metal Plate Resistor
OMR	: Oxide Metal Film Resistor
PMR	: Precision Metal Film Resistor
UFR	: Unflammable Resistor
VR	: Variable Resistor (Potentiometer)
WR	: Wire Wound Resistor

CAPACITORS–All capacitance values are in μF, unless otherwise indicated.

pF	: μμF (Pico farad)
C Cap	: Caramic Capacitor
Chip Cap	: Chip Capacitor
Chip T Cap	: Chip Tantalum Capacitor
E Cap	: Electrolytic Capacitor
FM Cap	: Film Mica Capacitor
LL Cap	: Low Leak Current Electrolytic Capacitor
MM Cap	: Metalized Mylar Capacitor
MP Cap	: Metalized Paper Capacitor
MY Cap	: Mylar Capacitor
NP Cap	: Non-polar Capacitor
PC Cap	: Polycarbonate Capacitor
PP Cap	: Polypropylene Capacitor
PS Cap	: Polystyrol Capacitor
T Cap	: Tantalum Capacitor
TF Cap	: Thin Film Capacitor
TR Cap	: Trimmer Capacitor

NOTES:

- [2 digits] indicates circuit board symbol number.
- "X " indicates quantity per set.

6.1 STANDARD PART NUMBER CODING

6.1.1 Fixed resistor coding

Fixed resistor part numbers are as follows.

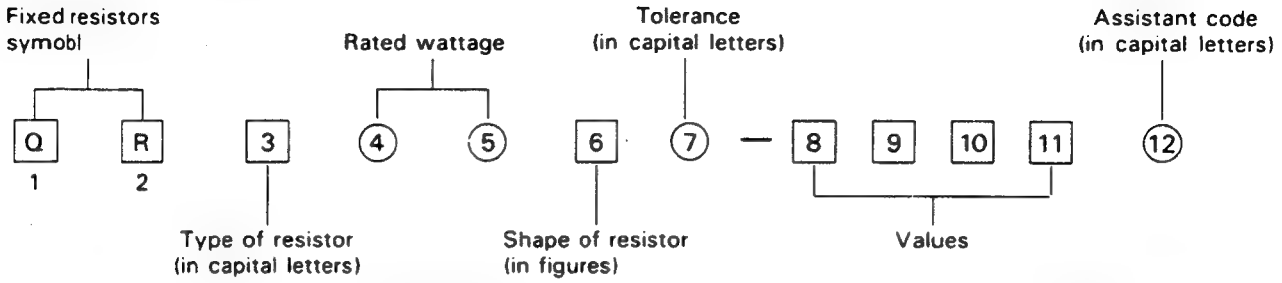

Type of resistor (third digit)

C	Composition resistors
D	Carbon film resistors
F	Unflammable resistors
G	Oxide metal film resistors
H	Fusible resistors
M	Metal plate resistors
S	Metal glazed resistors
V	Precision metal film resistors
W	Wire wound resistors
X	Metal film resistors
Z	Special resistors

Rated wattage (fourth and fifth digits)

A0	1/10 W
18	1/8 W
16	1/6 W
14	1/4 W
12	1/2 W
01	1 W
02	2 W
03	3 W
04	4 W
05	5 W
06	6 W
07	7 W
75	7.5 W
08	8 W
10	10 W
15	15 W
A6	16 W
20	20 W
30	30 W

Tolerance (seventh digit)

F	± 1 %
G	± 2 %
J	± 5 %
K	± 10 %
M	± 20 %

Assistant code (twelfth digit)

A	Small type
B	Small type
S	Small type
Y	Lead taping
Z	Lead taping

Values (eighth — tenth or eleventh digits)

examples:

R47		0.47 Ω
4R7		4.7 Ω
470	47×10^0	47 Ω
471	47×10^1	470 Ω
472	47×10^2	4.7 kΩ
473	47×10^3	47 kΩ
474	47×10^4	470 kΩ
475	47×10^5	4.7 MΩ

QRV resistance shown by four digits:

4640	464×10^0	464 Ω
4641	464×10^1	4.64 kΩ
4642	464×10^2	46.4 kΩ

Shape of resistor (sixth digit)

Note: ■ indicates flame retardant resistor.

Shape of resistor \ Type of resistor	C	D	F	G	H	M	S	V	W	X
1	▭	▭	▭	▭	▭			▭	▭	
2	▭	▭						▭		
3		▭		▭				▭		■
4		▭		▭	▭	▭		▭		
5				■		▭			(L) type	■
6			▭	■				▭		■
7		▭	Lug (B) type					▭		■
8			Lug (A) type				Chip			
9			Lug (C) type	■	■					■

6.1.2 Fixed capacitor coding

Fixed capacitor part numbers are as follows.

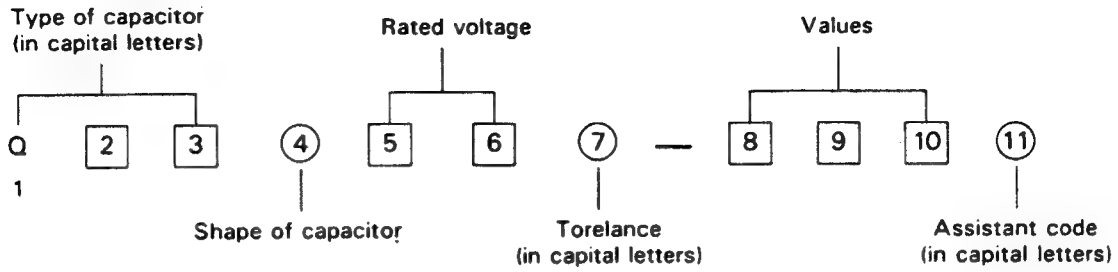

Ceramic capacitors

Type of capacitor (first – third digits)		Shape of capacitor (fourth digit)				
Symbol	Characteristics	Mono-direction	Kink lead	Axial lead	Axial forming lead	Chip
QCC	Ceramic	1		4	5	
QCD	High capacitance					A
QCF	High capacitance	1,4	3			8,A
QCS	Temperature compensation	1	3	4	5	8,A
QCT	Temperature compensation	Special coding				8,A
QCV	Ceramic			1	3	
QCX	Ceramic			1	3	
QCY	High capacitance	1,4	3	6	7	8,A
QCZ	Special type	Special coding				
QCB	Ceramic			B	C	

Electrolytic capacitors

Type of capacitor (first-third digits)		Shape of capacitor (fourth digit)				
Symbol	Characteristics	Tubular	Mono-direction	Anti-stress	Forming	Snap-in
QEB	Low leakage		4	5	6	
QEC	Low leakage		4,8,A	9,B	6,C	
QEE	Tantalum (normal)		4	5	6	
	Tantalum (small)		8			
QEF	Chip tantalum	8 (chip type)				
QEG	Low impedance		4			
QEK	Miniature type		4	5	6	
QEL	Small type		4	5	6	7
QEM	Small type		4,A	5	6	
QEN	Non-polar	2	4	5	6	
QEP	Non-polar (small)		4,A	5,B	6,C	
QER	Miniature type		4	5	6	
QET	Small type	2	4,A	5,B	6,C	7
QEU	Small type		4	5	6	
QEV	Small type		4		6	7
QEW	Normal	2	4	5	6	7

Paper film capacitors

Type of capacitor (first – third digits)		Shape of capacitor (fourth digit)				
		Tubular	Normal		Flame retardant	
Symbol	Characteristics		Mono-direction	Kink lead	Mono-direction	Kink lead
QFA	Metalized polypropylene				7	
QFE	Metalized mylar				5	
QFF	Film mica		4			
QFG	Polypropylene film		4	8		
QFH	Metalized mylar	2	4	3	5,7	6
QFJ	Mylar (special)		4			
QFK	Metalized mylar (small)				5	
QFM	Mylar	2	4	3,7	5	6
QFN	Mylar (small)		4	3		
QFP	Polypropylene		4	3,8		
QFS	Polystyrole	2	4	3		
QFV	Thin film		4	8		
QFZ	Special type	Special coding				

Rated voltage (fifth and sixth digits)

Fifth digit \ Sixth digit	A	B	C	D	E	F	G	H	J	K	V	W	X
0						3.15	4.0		6.3				
1	10		16	20	25		40	50	63	80	35		
2	100	125	160	200	250	315	400	500	630		350	450	600
3	1000	1250		2000				5000					

Tolerance (seventh digit)

A	$^{+100}_{-10}$ %	M	±20 %
F	±1 %	N	±30 %
G	±2 %	P	$^{+100}_{-0}$ %
H	$^{+50}_{-10}$ %	R	$^{+30}_{-10}$ %
J	±5 %	X	$^{+40}_{-20}$ %
K	±10 %	Z	$^{+80}_{-20}$ %

Values (eighth – tenth digits)

Example : Values are in picofarads

101	10×10^{1} pF	100 pF
102	10×10^{2} pF	1,000 pF (0.001 μF)
103	10×10^{3} pF	10,000 pF (0.01 μF)
104	10×10^{4} pF	100,000 pF (0.1 μF)
105	10×10^{5} pF	1 μF
5R0		5.0 pF

Assistant code (eleventh digit)

G Small size
Z Lead taping
Y Lead taping

6.1.3 Fuse coding

Standard fuse part numbers are as follows.

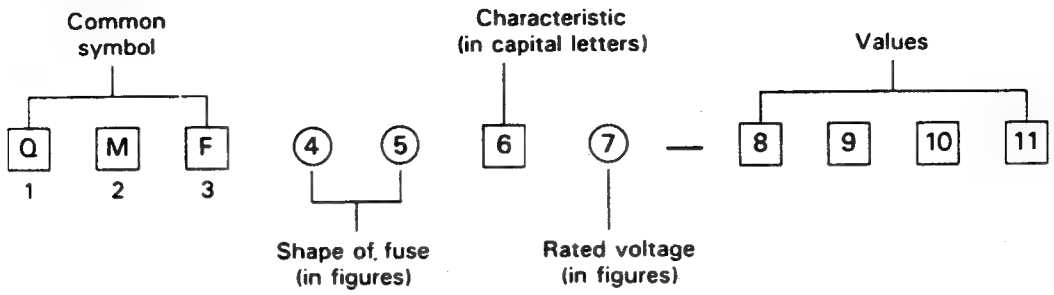

Shape of fuse
(fourth and fifth digits)

51	φ5.2×20 mm
60	φ6.4×30 mm
61	φ6.35×31.8 mm
63	φ6.4×30 mm with lead wires
66	φ6.35×31.8 mm with lead wires
00	Special type

Rated voltage
(seventh digit)

1	AC125 V
2	AC250 V
3	0.1–1 A : AC250 V
	1.25–6.3 A : AC125 V

Values
(eighth-tenth or eleventh digits)
example:

R63	0.63 A
1R0	1.0 A
2R5	2.5 A
100	10 A
R315	0.315 A
1R25	1.25 A

Characteristics (sixth digit)

Symbol	Fusing Current	Fusing Time	Remarks
A	210 %	Within 2 min.	Anti-rush type (for Europe)
	275 %	0.6 – 10 sec.	
	400 %	0.15 – 3 sec.	
	1000 %	0.02 – 0.3 sec.	
B	210 %	Within 30 min.	Regular fusible type (for SEMKO, Europe)
	275 %	0.05 – 2 sec.	
	400 %	0.01 – 0.3 sec.	
C	135 %	Within 1 hr.	Regular fusible type (for UL, Japan)
	200 %	Within 2 min.	
E	210 %	Within 2 min.	Anti-rush type (for Europe)
	275 %	0.6 – 10 sec.	
	400 %	0.15 – 3 sec.	
	1000 %	0.02 – 0.3 sec.	
J	135 %	Within 1 hr.	Anti-rush type
	200 %	Within 2 min.	
M	135 %	Within 1 hr.	Regular fusible type (for UL)
	200 %	Within 2 min.	
R	160 %	Within 1 hr.	Regular fusible type
	200 %	Within 2 min.	
S	160 %	Within 1 hr.	Anti-rush type
	200 %	Within 2 min.	
	700 % – 2000 %	Within 0.01 sec.	
U	135 %	Within 1 hr.	Anti-rush type (for UL)
	200 %	Within 2 min.	
	800 % – 2000 %	Within 0.01 sec.	

REC Y

#⚠	REF NO.	PART NO.	PART NAME, DESCRIPTION
	PWBA	PGE20215A	REC Y PWB ASSY
	IC1	TA7348P	IC
	IC2	AN6306	IC
	IC3	TA7347P	IC
	IC4	AN6306	IC
	IC5	TA7347P	IC
	IC6	TA7347P	IC
	IC7	TA7347P	IC
	IC8	BA401	IC
	IC9	TC4069UBP	IC
	IC10	VC2031DP	IC
	IC11	TC4069UBP	IC
	Q1	DTC144EF	TRANSISTOR
	Q2	2SC2647C	TRANSISTOR
	Q3	2SC2647C	TRANSISTOR
	Q4	2SC2647C	TRANSISTOR
	Q5	2SC2647C	TRANSISTOR
	Q6	2SC2647C	TRANSISTOR
	Q7	2SB641Q	TRANSISTOR
	Q8	2SC2647C	TRANSISTOR
	Q9	DTC144EF	TRANSISTOR
	Q10	2SC2647C	TRANSISTOR
	Q11	2SC2647C	TRANSISTOR
	Q12	DTC144EF	TRANSISTOR
	Q13	2SC2647C	TRANSISTOR
	Q14	2SB641Q	TRANSISTOR
	Q15	2SC2647C	TRANSISTOR
	Q16	2SC2647C	TRANSISTOR
	Q17	2SC2647C	TRANSISTOR
	Q18	2SC2647C	TRANSISTOR
	Q19	2SC2647C	TRANSISTOR
	Q20	2SC2647C	TRANSISTOR
	Q21	2SC2647C	TRANSISTOR
	Q22	2SC2647C	TRANSISTOR
	Q23	DTC144EF	TRANSISTOR
	Q24	2SC2647C	TRANSISTOR
	Q25	2SC2647C	TRANSISTOR
	Q26	2SC2647C	TRANSISTOR
	Q27	2SC2647C	TRANSISTOR
	Q28	2SC2647C	TRANSISTOR
	Q29	2SB641Q	TRANSISTOR
	Q30	2SC2647C	TRANSISTOR
	Q31	2SC2647C	TRANSISTOR
	Q32	2SB641Q	TRANSISTOR
	Q33	2SC2647C	TRANSISTOR
	Q34	2SC2647C	TRANSISTOR
	D1	RD3.3EB1	ZENER DIODE
	D2	1SS133	DIODE
	D3	1SS133	DIODE
	D4	RD3.3EB1	ZENER DIODE
	D5	1SS133	DIODE
	D6	1SS133	DIODE
	D7	1SS133	DIODE
	D8	1SS133	DIODE
	D9	1SS133	DIODE
	D10	1SS99	DIODE
	D11	1SS99	DIODE
	D12	1SS133	DIODE
	D13	1SS133	DIODE
	D14	1SS133	DIODE
	D15	1SS133	DIODE
	R1	QRD161J-750	RESISTOR
	R2	QRD161J-750	RESISTOR
	R3	QRD161J-102	RESISTOR
	R4	QRD161J-561	RESISTOR
	R5	QRD161J-561	RESISTOR
	R6	QRD161J-561	RESISTOR
	R7	QRD161J-223	RESISTOR
	R8	QRD161J-223	RESISTOR
	R9	QRD161J-181	RESISTOR
	R10	QRD161J-332	RESISTOR
	R11	QRD161J-181	RESISTOR
	R12	QRD161J-100	RESISTOR
	R13	QRD161J-561	RESISTOR
	R14	QRD161J-393	RESISTOR
	R15	QRD161J-183	RESISTOR
	R16	QRD161J-224	RESISTOR
	R17	QRD161J-331	RESISTOR
	R18	QRD161J-332	RESISTOR
	R19	QRD161J-561	RESISTOR
	R20	QRD161J-561	RESISTOR
	R21	QRD161J-563	RESISTOR
	R22	QRD161J-152	RESISTOR
	R23	QRD161J-102	RESISTOR
	R24	QRD161J-102	RESISTOR
	R25	QRD161J-821	RESISTOR
	R26	QRD161J-102	RESISTOR
	R27	QRD161J-102	RESISTOR
	R28	QRD161J-103	RESISTOR
	R29	QVZ3513-103	V RESISTOR,N.DARK CLIP
	R30	QRD161J-332	RESISTOR
	R31	QRV141F-6811AY	CMF RESISTOR
	R32	QRV141F-1501AY	CMF RESISTOR
	R33	QRV141F-2671AY	CMF RESISTOR
	R34	QRD161J-470	RESISTOR
	R35	QRD161J-822	RESISTOR
	R36	QRD161J-393	RESISTOR
	R37	QRV141F-1002AY	CMF RESISTOR
	R38	QRD161J-562	RESISTOR
	R39	QVZ3513-103	V RESISTOR,N.WHITE CLIP
	R40	QRD161J-682	RESISTOR
	R41	QRD161J-152	RESISTOR
	R42	QVZ3513-222	V RESISTOR,AGC LEVEL
	R44	QRD161J-102	RESISTOR
	R45	QRD161J-102	RESISTOR
	R46	QRD161J-821	RESISTOR
	R47	QRD161J-751	RESISTOR
	R48	QRD161J-223	RESISTOR
	R49	QRD161J-221	RESISTOR
	R50	QRD161J-331	RESISTOR
	R51	QRD161J-223	RESISTOR
	R52	QRD161J-563	RESISTOR
	R53	QVZ3513-473	V RESISTOR,S.CARR BAL
	R55	QRD161J-471	RESISTOR
	R56	QRD161J-103	RESISTOR
	R57	QVZ3513-103	V RESISTOR,S.DARK CLIP
	R58	QRD161J-332	RESISTOR
	R59	QRV141F-6341AY	CMF RESISTOR
	R60	QRV141F-1501AY	CMF RESISTOR
	R61	QRV141F-1201AY	CMF RESISTOR
	R62	QRD161J-470	RESISTOR
	R63	QRD161J-822	RESISTOR
	R64	QRD161J-393	RESISTOR
	R65	QRV141F-2671AY	CMF RESISTOR
	R66	QVZ3513-102	V RESISTOR,S.DEV

#⚠	REF NO.	PART NO.	PART NAME, DESCRIPTION
	R67	QRD161J-562	RESISTOR
	R68	QVZ3513-472	V RESISTOR,S.CARR
	R69	QVZ3513-103	V RESISTOR,S.WHITE CLIP
	R70	QRD161J-682	RESISTOR
	R71	QRD161J-181	RESISTOR
	R72	QRD161J-181	RESISTOR
	R73	QRD161J-393	RESISTOR
	R74	QRD161J-223	RESISTOR
	R75	QRD161J-222	RESISTOR
	R76	QRD161J-122	RESISTOR
	R77	QRD161J-152	RESISTOR
	R78	QRD161J-332	RESISTOR
	R79	QRD161J-101	RESISTOR
	R80	QRD161J-181	RESISTOR
	R81	QRD161J-181	RESISTOR
	R82	QRD161J-223	RESISTOR
	R84	QRD161J-102	RESISTOR
	R85	QRD161J-332	RESISTOR
	R86	QRD161J-102	RESISTOR
	R87	QRD161J-153	RESISTOR
	R88	QRD161J-393	RESISTOR
	R89	QRD161J-102	RESISTOR
	R90	QRD161J-561	RESISTOR
	R91	QRD161J-911	RESISTOR
	R92	QRD161J-511	RESISTOR
	R93	QVZ3513-102	V RESISTOR,N COLOR LEVEL
	R95	QRD161J-332	RESISTOR
	R96	QRD161J-102	RESISTOR
	R97	QRD161J-393	RESISTOR
	R98	QRD161J-153	RESISTOR
	R99	QRD161J-681	RESISTOR
	R100	QVZ3513-102	V RESISTOR,N.B/W PHASE EQ
	R101	QVZ3513-102	V RESISTOR,N.B/W LEVEL
	R102	QRD161J-223	RESISTOR
	R103	QRD161J-181	RESISTOR
	R104	QRD161J-681	RESISTOR
	R105	QRD161J-332	RESISTOR
	R106	QRD161J-101	RESISTOR
	R107	QRD161J-152	RESISTOR
	R108	QRD161J-122	RESISTOR
	R109	QRD161J-821	RESISTOR
	R110	QRD161J-391	RESISTOR
	R111	QRD161J-102	RESISTOR
	R112	QRD161J-152	RESISTOR
	R113	QRD161J-102	RESISTOR
	R114	QRD161J-102	RESISTOR
	R115	QRD161J-102	RESISTOR
	R116	QRD161J-102	RESISTOR
	R117	QRD161J-391	RESISTOR
	R118	QRD161J-102	RESISTOR
	R119	QRD161J-681	RESISTOR
	R120	QRD161J-391	RESISTOR
	R121	QRD161J-473	RESISTOR
	R122	QRD161J-123	RESISTOR
	R123	QRD161J-222	RESISTOR
	R124	QRD161J-681	RESISTOR
	R125	QRD161J-152	RESISTOR
	R126	QRD161J-101	RESISTOR
	R128	QVZ3513-332	V RESISTOR,SUB EMPHA IN
	R129	QRD161J-182	RESISTOR
	R130	QVZ3513-222	V RESISTOR,5V ADJ
	R131	QRD161J-152	RESISTOR
	R132	QRD161J-472	RESISTOR
	R133	QRV141F-3301AY	RESISTOR
	R134	QRV141F-1001AY	CMF RESISTOR
	R135	QRV141F-3301AY	RESISTOR
	R136	QRV141F-1501AY	CMF RESISTOR
	R137	QRV141F-4700AY	CMF RESISTOR

#⚠	REF NO.	PART NO.	PART NAME, DESCRIPTION
	R138	QRV141F-1001AY	CMF RESISTOR
	R139	QRD161J-104	RESISTOR
	R140	QRV141F-4700AY	CMF RESISTOR
	R141	QRV141F-1001AY	CMF RESISTOR
	R142	QRD161J-561	RESISTOR
	R143	QRV141F-3301AY	RESISTOR
	R144	QRV141F-3301AY	RESISTOR
	R145	QRV141F-1501AY	CMF RESISTOR
	R146	QRD161J-561	RESISTOR
	R147	QRD161J-102	RESISTOR
	R148	QVZ3513-222	V RESISTOR,D.E.IN
	R149	QRD161J-152	RESISTOR
	R150	QRD161J-561	RESISTOR
	R151	QVZ3513-103	V RESISTOR,LIMITER BAL
	R152	QRD161J-103	RESISTOR
	R153	QRD161J-103	RESISTOR
	R154	QRD161J-103	RESISTOR
	R155	QRD161J-103	RESISTOR
	R156	QRD161J-103	RESISTOR
	R157	QRD161J-103	RESISTOR
	R158	QRD161J-104	RESISTOR
	R159	QRD161J-104	RESISTOR
	R160	QRD161J-104	RESISTOR
	R161	QRD161J-104	RESISTOR
	R162	QRD161J-104	RESISTOR
	R163	QVZ3513-682	V RESISTOR,N.DEV
	R164	QVZ3513-472	V RESISTOR,N.CARR
	R165	QRD161J-103	RESISTOR
	R166	QRD161J-103	RESISTOR
	R167	QRD161J-103	RESISTOR
	R168	QRD161J-103	RESISTOR
	R169	QRD161J-103	RESISTOR
	R170	QRD161J-103	RESISTOR
	R171	QRD161J-104	RESISTOR
	R172	QRD161J-104	RESISTOR
	R173	QRD161J-104	RESISTOR
	R174	QRD161J-104	RESISTOR
	R175	QRD161J-104	RESISTOR
	R176	QRD161J-104	RESISTOR
	R177	QRD161J-102	RESISTOR
	R178	QRD161J-393	RESISTOR
	R179	QRD161J-153	RESISTOR
	R180	QRD161J-223	RESISTOR
	R181	QRD161J-102	RESISTOR
	R182	QRD161J-102	RESISTOR
	R183	QRD161J-332	RESISTOR
	R184	QRD161J-911	RESISTOR
	R185	QRD161J-222	RESISTOR
	R186	QRD161J-103	RESISTOR
	R187	QRD161J-103	RESISTOR
	R188	QRD161J-102	RESISTOR
	R189	QRD161J-103	RESISTOR
	R190	QRD161J-103	RESISTOR
	R191	QRD161J-331	RESISTOR
	R192	QRD161J-182	RESISTOR
	R193	QRD161J-223	RESISTOR
	R194	QRD161J-223	RESISTOR
	R195	QRD161J-102	RESISTOR
	R196	QRD161J-103	RESISTOR
	R197	QRD161J-103	RESISTOR
	C1	QER61CM-476	E CAPACITOR
	C2	QER61CM-476	E CAPACITOR
	C3	QER61CM-476	E CAPACITOR
	C4	QER61CM-476	E CAPACITOR
	C5	QEK40JM-227	E CAPACITOR
	C6	QCF11HP-223	CAPACITOR
	C7	QER61CM-476	E CAPACITOR

REC Y

#⚠	REF NO.	PART NO.	PART NAME, DESCRIPTION
	C8	QER61CM-106G	E CAPACITOR
	C9	QEK40JM-227	E CAPACITOR
	C10	QER60JM-107	E CAPACITOR
	C11	QCF31HP-103	CAPACITOR
	C12	QCS31HJ-121	CAPACITOR
	C13	QER61HM-224G	E CAPACITOR
	C14	QER61HM-335G	E CAPACITOR
	C15	QCT25CH-390	CAPACITOR
	C16	QCF31HP-103	CAPACITOR
	C17	QCF11HP-223	CAPACITOR
	C18	QFN31HK-223	M CAPACITOR
	C19	QER40JM-107	E CAPACITOR
	C20	QCF11HP-223	CAPACITOR
	C21	QER61CM-476	E CAPACITOR
	C22	QCF11HP-223	CAPACITOR
	C23	QFN31HK-104	M CAPACITOR
	C24	QCS31HJ-560	CAPACITOR
	C25	QCS31HJ-560	CAPACITOR
	C26	QCF11HP-223	CAPACITOR
	C28	PU51163-151	CAPACITOR
	C29	QCS31HJ-150	CAPACITOR
	C30	QEPA1CM-475	NP E CAPACITOR
	C31	QCF31HP-103	CAPACITOR
	C32	QCS31HJ-121	CAPACITOR
	C33	QCS31HJ-121	CAPACITOR
	C34	QFN31HK-223	M CAPACITOR
	C35	QCS31HJ-561	CAPACITOR
	C36	QFN31HK-223	M CAPACITOR
	C37	QER61CM-476	E CAPACITOR
	C38	QCF11HP-223	CAPACITOR
	C39	QER61HM-224G	E CAPACITOR
	C40	QCT25CH-680	CAPACITOR
	C41	QCF31HP-103	CAPACITOR
	C42	QCF31HP-223	CAPACITOR
	C43	QEK40JM-107	E CAPACITOR
	C44	QCF31HP-223	CAPACITOR
	C45	QEPA1CM-475	NP E CAPACITOR
	C46	PU51163-151	CAPACITOR
	C47	QCS31HJ-150	CAPACITOR
	C48	QCF31HP-103	CAPACITOR
	C49	QER61CM-476	E CAPACITOR
	C50	QCF11HP-223	CAPACITOR
	C51	QER61AM-476	E CAPACITOR
	C52	QCF11HP-223	CAPACITOR
	C53	QER60JM-476	E CAPACITOR
	C54	QCF11HP-223	CAPACITOR
	C55	QER61CM-476	E CAPACITOR
	C56	QCF11HP-223	CAPACITOR
	C57	QER61CM-476	E CAPACITOR
	C58	QER61CM-476	E CAPACITOR
	C59	QER61CM-476	E CAPACITOR
	C60	QCF11HP-223	CAPACITOR
	C61	QER61CM-476	E CAPACITOR
	C62	QER61CM-476	E CAPACITOR
	C63	QCF11HP-223	CAPACITOR
	C65	QER61CM-476	E CAPACITOR
	C66	QCF11HP-223	CAPACITOR
	C67	QER61CM-476	E CAPACITOR
	C68	QER61CM-476	E CAPACITOR
	C69	QCS31HJ-820	CAPACITOR
	C70	QER61CM-476	E CAPACITOR
	C71	QCF11HP-223	CAPACITOR
	C73	QER61CM-476	E CAPACITOR
	C74	QCF11HP-223	CAPACITOR
	C75	QER61CM-476	E CAPACITOR
	C76	QER61CM-476	E CAPACITOR
	C77	QCS31HJ-560	CAPACITOR

#⚠	REF NO.	PART NO.	PART NAME, DESCRIPTION
	C78	QCF11HP-223	CAPACITOR
	C79	QER61CM-476	E CAPACITOR
	C80	QER61CM-476	E CAPACITOR
	C81	QER61CM-476	E CAPACITOR
	C82	QCF11HP-223	CAPACITOR
	C83	QER61CM-476	E CAPACITOR
	C84	QCF11HP-223	CAPACITOR
	C85	QER61CM-476	E CAPACITOR
	C86	QCS31HJ-471	CAPACITOR
	C87	QER61CM-476	E CAPACITOR
	C88	QER61CM-476	E CAPACITOR
	C89	QER61CM-106G	E CAPACITOR
	C90	QER61CM-106G	E CAPACITOR
	C91	QCS31HJ-9R0	CAPACITOR
	C92	QCF31HP-223	CAPACITOR
	C93	QER61CM-476	E CAPACITOR
	C94	QER61CM-106G	E CAPACITOR
	C95	QCF11HP-223	CAPACITOR
	C97	QER61CM-476	E CAPACITOR
	C98	QCF11HP-223	CAPACITOR
	C99	QER61CM-476	E CAPACITOR
	C100	QCS31HJ-270	CAPACITOR
	C101	QER61CM-476	E CAPACITOR
	C102	QCF11HP-223	CAPACITOR
	C103	QER40JM-227	E CAPACITOR
	C104	QER61CM-476	E CAPACITOR
	C106	QER61CM-476	E CAPACITOR
	C107	QCF11HP-223	CAPACITOR
	C108	QCF11HP-223	CAPACITOR
	C109	QER61CM-476	E CAPACITOR
	C110	QER61CM-476	E CAPACITOR
	C111	PU51163-271	CAPACITOR
	C112	PU51163-820	CAPACITOR
	C113	PU51163-271	CAPACITOR
	C114	PU51163-221	CAPACITOR
	C115	PU51163-271	CAPACITOR
	C116	PU51163-820	CAPACITOR
	C117	PU51163-271	CAPACITOR
	C118	PU51163-271	CAPACITOR
	C119	PU51163-221	CAPACITOR
	C120	QER61HM-475	E CAPACITOR
	C121	QER61HM-475	E CAPACITOR
	C122	QER60JM-476	E CAPACITOR
	C123	QER61CM-106	E CAPACITOR
	C124	QER60JM-476	E CAPACITOR
	C125	QCF11HP-223	CAPACITOR
	C126	QER61CM-106	E CAPACITOR
	C127	QCF11HP-223	CAPACITOR
	C128	QFN31HK-223	M CAPACITOR
	C129	QER61CM-476	E CAPACITOR
	C130	QER61CM-476	E CAPACITOR
	C131	QCS31HJ-151	CAPACITOR
	C132	QCS31HJ-120	CAPACITOR
	C133	QCS31HJ-560	CAPACITOR
	C134	QCS31HJ-820	CAPACITOR
	C135	QCS11HJ-270	CAPACITOR
	C136	QER40JM-227	E CAPACITOR
	C137	QCS11HJ-5R0	CAPACITOR
	C138	QCS11HJ-100	CAPACITOR
	C139	QCS11HJ-5R0	CAPACITOR
	C140	QFN41HJ-563	M CAPACITOR
	L1	PU48530-221J	COIL
	L2	PU48530-221J	COIL
	L3	PU48530-101J	COIL
	L4	PU48530-221J	COIL
	L5	PU48530-680J	COIL
	L6	PU48530-221J	COIL

#⚠	REF NO.	PART NO.	PART NAME, DESCRIPTION
	L7	PU48530-221J	COIL
	L8	PU48530-221J	COIL
	L9	PU48530-221J	COIL
	L10	PU48530-221J	COIL
	L11	PU48530-221J	COIL
	L12	PU48530-221J	COIL
	L13	PU48530-470J	COIL
	L14	PU48530-470J	COIL
	L15	PU48530-221J	COIL
	L16	PU48530-221J	COIL
	L17	PU48530-220J	COIL
	L18	PU48530-221J	COIL
	L19	PU48530-221J	COIL
	L20	PU48530-221J	COIL
	L21	PU48530-221J	COIL
	L22	PU48530-221J	COIL
	L23	PU48530-221J	COIL
	L24	PU48530-331J	COIL
	L25	PU48530-100J	COIL
	L26	PU48530-100J	COIL
	L28	PU48530-560J	COIL
	EQ1	PGZ00800	LOW PASS FILTER
	LPF1	PGZ00972	LOW PASS FILTER
	LPF2	PGZ00183	LOW PASS FILTER
	LPF3	PGZ00799	LOW PASS FILTER
	DL1	PGZ00131-002	DELAY LINE
	TH1	ERT-D2FHK-202S	THERMISTOR
	CP1	QRD167J-0R0	RESISTOR
	CP2	QRD167J-0R0	RESISTOR
	CP3	QRD167J-0R0	RESISTOR
	HD1	PGZ00606-02	PWB HOLDER, X2
	SPC1	PGZ00605-02	PWB SPACER, X2
	TP1	PU54983	TEST PIN, X12
	CN1	PGZ00421-100	MALE CONNECTOR

****

****
* 14. PB Y BOARD ASSEMBLY <02> *
****

	PWBA	PGE20218A	PB Y PWB ASSY
	IC1	AN3322S	IC
	IC2	TA7347P	IC
	IC3	TA7347P	IC
	IC4	AN607P	IC
	IC5	AN6393	IC
	IC6	AN3322S	IC
	IC7	TA7347P	IC
	IC8	TA7347P	IC
	IC9	VC2074	IC
	IC10	TC4538BP	IC
	IC11	AN3212S	IC
	IC12	TA7347P	IC
	IC13	AN608P	IC
	IC14	AN608P	IC
	IC15	7VT05	IC
	IC16	7VT05	IC
	Q1	2SB641Q	TRANSISTOR
	Q2	2SB641Q	TRANSISTOR
	Q3	2SC2647C	TRANSISTOR
	Q4	2SC2647C	TRANSISTOR
	Q5	2SC2647C	TRANSISTOR
	Q6	2SB641Q	RESISTOR
	Q7	2SB641Q	TRANSISTOR
	Q8	2SC2647C	TRANSISTOR
	Q9	2SC2647C	TRANSISTOR
	Q10	DTA114EF	TRANSISTOR
	Q11	DTC144EF	TRANSISTOR
	Q12	DTC144EF	TRANSISTOR
	Q13	DTC144EF	TRANSISTOR
	Q14	DTC144EF	TRANSISTOR
	Q15	DTC144EF	TRANSISTOR
	Q16	2SC2647C	TRANSISTOR
	Q17	2SC2647C	TRANSISTOR
	Q18	DTC114EF	TRANSISTOR
	Q19	2SB641Q	TRANSISTOR
	Q20	2SC2647C	TRANSISTOR
	Q21	2SB641Q	TRANSISTOR
	Q22	DTA144EF	TRANSISTOR
	Q23	DTC144EF	TRANSISTOR
	Q24	DTA144EF	TRANSISTOR
	Q25	DTC144EF	TRANSISTOR
	Q26	DTC144EF	TRANSISTOR
	Q27	2SB641Q	TRANSISTOR
	Q28	2SB641Q	TRANSISTOR
	Q29	2SC2647C	TRANSISTOR
	Q30	2SC2647C	TRANSISTOR
	Q31	DTC144EF	TRANSISTOR
	Q32	DTC144EF	TRANSISTOR
	Q34	2SC2647C	TRANSISTOR
	Q35	2SB641Q	TRANSISTOR
	Q37	2SC2647C	TRANSISTOR
	Q38	DTC144EF	TRANSISTOR
	Q39	2SC2647C	TRANSISTOR
	Q40	2SC2647C	TRANSISTOR
	Q41	2SC2647C	TRANSISTOR
	Q42	2SC2647C	TRANSISTOR
	Q43	2SB641Q	TRANSISTOR
	Q44	2SC2647C	TRANSISTOR
	Q45	2SC2647C	TRANSISTOR
	Q46	2SC2647C	TRANSISTOR
	Q47	2SC2647C	TRANSISTOR
	D1	1SS133	DIODE
	D2	1SS133	DIODE
	D3	1SS133	DIODE
	D4	1SS133	DIODE
	D5	1SS133	DIODE
	D6	1SS133	DIODE
	D7	1SS133	DIODE
	D8	1SS133	DIODE
	D9	1SS133	DIODE
	D10	1SS133	DIODE
	D11	1SS133	DIODE
	D12	1SS133	DIODE
	D13	1SS133	DIODE
	D17	RD6.8EB3	ZENER DIODE
	D18	1SS133	DIODE
	D19	1SS133	DIODE
	D20	1SS133	DIODE
	D21	1SS133	DIODE
	D23	1SS133	DIODE
	D24	1SS133	DIODE
	D25	1SS133	DIODE
	D26	1SS133	DIODE
	D27	1SS133	DIODE
	D28	1SS133	DIODE
	D29	0A91	DIODE
	D30	1SS133	DIODE

PB Y

#⚠	REF NO.	PART NO.	PART NAME, DESCRIPTION
	D31	1SS133	DIODE
	D32	1SS133	DIODE
	D34	RD6.2EB1	ZENER DIODE
	D35	1SS99	DIODE
	D36	1SS99	DIODE
	D37	1SS99	DIODE
	D38	1SS99	DIODE
	R1	QRD161J-152	RESISTOR
	R2	QRD161J-152	RESISTOR
	R3	QVZ3513-473	V RESISTOR,NOR DEM LEVEL
	R4	QVZ3513-222	V RESISTOR,NOR LIMIT BAL
	R5	QRD161J-562	RESISTOR
	R6	QRD161J-122	RESISTOR
	R7	QRD161J-122	RESISTOR
	R8	QRD161J-272	RESISTOR
	R9	QRD161J-152	RESISTOR
	R10	QRV141F-3920AY	CMF RESISTOR
	R11	QRV141F-1501AY	CMF RESISTOR
	R12	QRD161J-103	RESISTOR
	R13	QRD161J-102	RESISTOR
	R14	QRD161J-181	RESISTOR
	R15	QRD161J-333	RESISTOR
	R16	QRD161J-102	RESISTOR
	R17	QRD161J-681	RESISTOR
	R18	QRD161J-102	RESISTOR
	R19	QRD161J-561	RESISTOR
	R20	QRD161J-392	RESISTOR
	R21	QRD161J-181	RESISTOR
	R22	QRD161J-333	RESISTOR
	R23	QRD161J-222	RESISTOR
	R24	QRD161J-0R0	RESISTOR
	R26	QRD161J-561	RESISTOR
	R27	QRD161J-101	RESISTOR
	R28	QRD161J-392	RESISTOR
	R29	QRD161J-561	RESISTOR
	R30	QRD161J-561	RESISTOR
	R31	QRD161J-103	RESISTOR
	R32	QRD161J-271	RESISTOR
	R33	QRD161J-223	RESISTOR
	R34	QRD161J-223	RESISTOR
	R35	QRD161J-273	RESISTOR
	R36	QRD161J-101	RESISTOR
	R37	QRD161J-152	RESISTOR
	R38	QRD161J-152	RESISTOR
	R39	QVZ3513-473	V RESISTOR,S DEM LEVEL
	R41	QRD161J-562	RESISTOR
	R42	QRD161J-122	RESISTOR
	R43	QRD161J-821	RESISTOR
	R44	QRD161J-272	RESISTOR
	R45	QRD161J-152	RESISTOR
	R46	QRV141F-3920AY	CMF RESISTOR
	R47	QRV141F-1501AY	CMF RESISTOR
	R48	QRD161J-102	RESISTOR
	R49	QRD161J-560	RESISTOR
	R50	QRD161J-333	RESISTOR
	R51	QRD161J-103	RESISTOR
	R52	QRD161J-122	RESISTOR
	R53	QRD161J-122	RESISTOR
	R54	QRD161J-681	RESISTOR
	R55	QRD161J-0R0	RESISTOR
	R56	QRD161J-122	RESISTOR
	R57	QRD161J-122	RESISTOR
	R58	QRD161J-472	RESISTOR
	R59	QRD161J-181	RESISTOR
	R60	QRD161J-333	RESISTOR
	R61	QRD161J-332	RESISTOR

#⚠	REF NO.	PART NO.	PART NAME, DESCRIPTION
	R62	QRD161J-0R0	RESISTOR
	R63	QRD161J-561	RESISTOR
	R64	QRD161J-472	RESISTOR
	R65	QRD161J-472	RESISTOR
	R66	QRD161J-103	RESISTOR
	R67	QRD161J-472	RESISTOR
	R68	QRD161J-472	RESISTOR
	R69	QRD161J-272	RESISTOR
	R70	QRD161J-102	RESISTOR
	R71	QRD161J-333	RESISTOR
	R72	QRD161J-103	RESISTOR
	R73	QRD161J-473	RESISTOR
	R74	QRD161J-682	RESISTOR
	R76	QRD161J-103	RESISTOR
	R77	QRD161J-103	RESISTOR
	R78	QRD161J-103	RESISTOR
	R79	QRD161J-103	RESISTOR
	R80	QRD161J-103	RESISTOR
	R81	QRD161J-103	RESISTOR
	R82	QRD161J-103	RESISTOR
	R83	QRD161J-103	RESISTOR
	R84	QRD161J-103	RESISTOR
	R85	QRD161J-103	RESISTOR
	R86	QRD161J-103	RESISTOR
	R87	QRD161J-102	RESISTOR
	R88	QRD161J-562	RESISTOR
	R89	QVZ3513-104	V RESISTOR,V PULSE WIDTH
	R90	QRD161J-333	RESISTOR
	R91	QRD161J-333	RESISTOR
	R92	QRD161J-562	RESISTOR
	R93	QVZ3513-104	V RESISTOR,V PULSE POSI
	R94	QRD161J-183	RESISTOR
	R95	QRD161J-333	RESISTOR
	R96	QRD161J-102	RESISTOR
	R98	QRD161J-331	RESISTOR
	R99	QRD161J-681	RESISTOR
	R100	QRD161J-681	RESISTOR
	R101	QRD161J-273	RESISTOR
	R102	QRD161J-223	RESISTOR
	R103	QRD161J-122	RESISTOR
	R104	QRD161J-101	RESISTOR
	R105	QRD161J-102	RESISTOR
	R106	QRD161J-102	RESISTOR
	R107	QRD161J-221	RESISTOR
	R108	QRD161J-681	RESISTOR
	R109	QRD161J-102	RESISTOR
	R110	QVZ3513-222	V RESISTOR,NOR LIN COMP
	R111	QRD161J-102	RESISTOR
	R112	QRD161J-102	RESISTOR
	R113	QRD161J-102	RESISTOR
	R114	QRD161J-221	RESISTOR
	R115	QRD161J-681	RESISTOR
	R116	QRD161J-102	RESISTOR
	R117	QVZ3513-222	V RESISTOR,S LIN COMP
	R118	QRD161J-102	RESISTOR
	R119	QRD161J-333	RESISTOR
	R120	QRD161J-560	RESISTOR
	R122	QRD161J-103	RESISTOR
	R123	QRD161J-182	RESISTOR
	R124	QRD161J-222	RESISTOR
	R125	QRD161J-101	RESISTOR
	R126	QRD161J-391	RESISTOR
	R127	QRD161J-182	RESISTOR
	R129	QVZ3513-102	V R,DUB Y OUT LEVEL
	R130	QVZ3513-102	V R,C LINE OUT LEVEL
	R131	QRD161J-102	RESISTOR
	R132	QRD161J-101	RESISTOR

#⚠	REF NO.	PART NO.	PART NAME, DESCRIPTION
	R133	QRD161J-392	RESISTOR
	R134	QRD161J-102	RESISTOR
	R135	QRD161J-332	RESISTOR
	R136	QRD161J-153	RESISTOR
	R137	QRD161J-273	RESISTOR
	R138	QRD161J-102	RESISTOR
	R139	QRD161J-472	RESISTOR
	R140	QRD161J-562	RESISTOR
	R141	QRD161J-4R7	RESISTOR
	R142	QRD161J-4R7	RESISTOR
	R143	QRD161J-101	RESISTOR
	R144	QRD161J-392	RESISTOR
	R145	QRD161J-471	RESISTOR
	R146	QRD161J-392	RESISTOR
	R147	QRD161J-682	RESISTOR
	R148	QRD161J-104	RESISTOR
	R149	QRD161J-103	RESISTOR
	R150	QRD161J-103	RESISTOR
	R151	QRD161J-102	RESISTOR
	R152	QVZ3513-102	V R,LINE Y OUT LEVEL
	R153	QRD161J-223	RESISTOR
	R154	QRD161J-750	RESISTOR
	R155	QRD161J-750	RESISTOR
	R156	QRD161J-103	RESISTOR
	R157	QRD161J-102	RESISTOR
	R158	QRD161J-750	RESISTOR
	R159	QRD161J-750	RESISTOR
	R161	QRD161J-103	RESISTOR
	R162	QRD161J-0R0	RESISTOR
	R163	QRD161J-561	RESISTOR
	R164	QRD161J-393	RESISTOR
	R165	QRD161J-822	RESISTOR
	R166	QRD161J-394	RESISTOR
	R167	QRD161J-394	RESISTOR
	R168	QRD161J-562	RESISTOR
	R169	QRD161J-222	RESISTOR
	R170	QRD161J-152	RESISTOR
	R171	QRD161J-475	RESISTOR
	R172	QRD161J-475	RESISTOR
	R173	QRD167J-102	RESISTOR
	R174	QRD167J-223	RESISTOR
	R175	QRD167J-472	RESISTOR
	R176	QRD167J-102	RESISTOR
	R177	QRD167J-223	RESISTOR
	R178	QRD167J-472	RESISTOR
	R179	QRD167J-102	RESISTOR
	R180	QRD167J-102	RESISTOR
	R181	QVZ3513-102	V R,627 DUB Y OUT LEVEL
	R182	QRD167J-101	RESISTOR
	R183	QRD167J-102	RESISTOR
	R184	QRD161J-103	RESISTOR
	R185	QRD161J-562	RESISTOR
	R188	QRD161J-154	RESISTOR
	R189	QRD161J-335	RESISTOR
	R190	QRD161J-475	RESISTOR
	C1	QCF11HP-223	CAPACITOR
	C2	QER61CM-476	E CAPACITOR
	C3	QCF11HP-223	CAPACITOR
	C4	QER61CM-476	E CAPACITOR
	C5	QCF31HP-103	CAPACITOR
	C6	QER61HM-335G	E CAPACITOR
	C7	QCS31HJ-270	CAPACITOR
	C8	QCS31HJ-270	CAPACITOR
	C9	QCF31HP-103	CAPACITOR
	C10	QCF31HP-103	CAPACITOR
	C11	QFN31HK-103	M CAPACITOR
	C12	QFN31HK-103	M CAPACITOR
	C13	QFN31HK-103	M CAPACITOR

#⚠	REF NO.	PART NO.	PART NAME, DESCRIPTION
	C14	QCS31HJ-390	CAPACITOR
	C15	QFN31HK-103	M CAPACITOR
	C16	QCS31HJ-120	CAPACITOR
	C17	QFN31HK-103	M CAPACITOR
	C18	QFN31HK-103	M CAPACITOR
	C19	PU51163-391	CAPACITOR
	C20	PU51163-271	CAPACITOR
	C21	QCS31HJ-180	CAPACITOR
	C22	QCF31HP-103	CAPACITOR
	C23	PU59499	BUS WIRE
	C24	QCF11HP-223	CAPACITOR
	C25	QEK41CM-107	E CAPACITOR
	C26	QFN31HK-103	M CAPACITOR
	C27	QCF11HP-223	CAPACITOR
	C28	QER61CM-476	E CAPACITOR
	C29	QFN31HK-103	M CAPACITOR
	C30	QCS31HJ-101	CAPACITOR
	C31	QFN31HK-103	M CAPACITOR
	C32	QCS31HJ-101	CAPACITOR
	C33	QCS31HJ-821	CAPACITOR
	C34	QCF11HP-223	CAPACITOR
	C35	QER61CM-476	E CAPACITOR
	C36	QFN31HK-103	M CAPACITOR
	C37	QFN31HK-102	M CAPACITOR
	C38	QFN31HK-103	M CAPACITOR
	C39	QFN31HK-103	M CAPACITOR
	C40	QCF11HP-223	CAPACITOR
	C41	QER61CM-476	E CAPACITOR
	C42	QFN31HK-103	M CAPACITOR
	C43	QFN31HK-104	M CAPACITOR
	C44	QCS31HJ-560	CAPACITOR
	C45	QFN31HK-103	M CAPACITOR
	C46	QCF11HP-223	CAPACITOR
	C47	QER61CM-476	E CAPACITOR
	C48	QFN31HK-103	M CAPACITOR
	C50	QCS31HJ-270	CAPACITOR
	C51	QCF31HP-103	CAPACITOR
	C52	QER61HM-335G	E CAPACITOR
	C53	QCS31HJ-120	CAPACITOR
	C54	QCS31HJ-120	CAPACITOR
	C55	QCF31HP-103	CAPACITOR
	C56	QFN31HK-103	M CAPACITOR
	C57	QFN31HK-103	M CAPACITOR
	C58	QCF31HP-103	CAPACITOR
	C59	QFN31HK-103	M CAPACITOR
	C60	QCS31HJ-390	CAPACITOR
	C61	QFN31HK-103	M CAPACITOR
	C62	QCS31HJ-120	CAPACITOR
	C63	QFN31HK-103	M CAPACITOR
	C64	QFN31HK-103	M CAPACITOR
	C65	PU51163-391	CAPACITOR
	C66	PU51163-181	CAPACITOR
	C67	QCF31HP-103	CAPACITOR
	C68	QFN31HK-103	M CAPACITOR
	C69	QCF11HP-223	CAPACITOR
	C70	QEK41CM-107	E CAPACITOR
	C71	QCF11HP-223	CAPACITOR
	C72	QER61CM-476	E CAPACITOR
	C73	QFN31HK-103	M CAPACITOR
	C74	QFN31HK-103	M CAPACITOR
	C75	QCS31HJ-151	CAPACITOR
	C76	QFN31HK-102	M CAPACITOR
	C77	QFN31HK-103	M CAPACITOR
	C78	QCS31HJ-271	CAPACITOR
	C79	QCS31HJ-151	CAPACITOR
	C80	QFN41HK-102	M CAPACITOR
	C81	QFN41HJ-103	M CAPACITOR
	C82	QCS31HJ-271	CAPACITOR

PB Y

#⚠	REF NO.	PART NO.	PART NAME, DESCRIPTION
	C83	QCF11HP-223	CAPACITOR
	C84	QER61CM-476	E CAPACITOR
	C85	QFN31HK-103	M CAPACITOR
	C86	QFN31HK-103	M CAPACITOR
	C87	QFN31HK-102	M CAPACITOR
	C88	QCF11HP-223	CAPACITOR
	C89	QER61CM-476	E CAPACITOR
	C90	QER61HM-474	E CAPACITOR
	C91	QFN31HK-103	M CAPACITOR
	C92	QCF11HP-223	CAPACITOR
	C93	QER60JM-476	E CAPACITOR
	C94	QER61HM-105G	E CAPACITOR
	C95	QER61HM-105G	E CAPACITOR
	C96	QFN31HK-102	M CAPACITOR
	C97	QFN31HK-102	M CAPACITOR
	C98	QFN31HK-103	M CAPACITOR
	C99	QFN31HK-103	M CAPACITOR
	C100	QCF11HP-223	CAPACITOR
	C101	QER61CM-106G	E CAPACITOR
	C102	QER40JM-107	E CAPACITOR
	C103	QCF11HP-223	CAPACITOR
	C104	QFN31HK-103	M CAPACITOR
	C105	QER61CM-476	E CAPACITOR
	C106	QFN31HK-103	M CAPACITOR
	C107	QCF11HP-223	CAPACITOR
	C108	QFN31HK-103	M CAPACITOR
	C109	QFN31HK-103	M CAPACITOR
	C110	QER61HM-105G	E CAPACITOR
	C111	QCF11HP-223	CAPACITOR
	C112	QER61CM-476	E CAPACITOR
	C113	QFN31HK-102	M CAPACITOR
	C114	QER61CM-476	E CAPACITOR
	C115	QFN31HK-102	M CAPACITOR
	C116	QER61CM-476	E CAPACITOR
	C117	QER61CM-476	E CAPACITOR
	C118	QER61CM-476	E CAPACITOR
	C119	QCS31HJ-391	CAPACITOR
	C120	QCF11HP-223	CAPACITOR
	C121	QER61CM-476	E CAPACITOR
	C122	QER61CM-476	E CAPACITOR
	C123	QER61CM-476	E CAPACITOR
	C124	QCF11HP-223	CAPACITOR
	C125	QEK41CM-107	E CAPACITOR
	C126	QER41HM-105	E CAPACITOR
	C127	QCF11HP-223	CAPACITOR
	C128	QER61CM-476	E CAPACITOR
	C129	QEK41CM-107	E CAPACITOR
	C130	QER61CM-476	E CAPACITOR
	C131	QER61CM-476	E CAPACITOR
	C132	QCF11HP-223	CAPACITOR
	C133	QCF11HP-223	CAPACITOR
	C134	QEK41CM-107	E CAPACITOR
	C135	QER61CM-476	E CAPACITOR
	C136	QEK41CM-107	E CAPACITOR
	C137	QCF11HP-223	CAPACITOR
	C138	QER61HM-105G	E CAPACITOR
	C139	QER61CM-106G	E CAPACITOR
	C140	QER61CM-476	E CAPACITOR
	C141	QCF11HP-223	CAPACITOR
	C142	QEK41CM-107	E CAPACITOR
	C143	QEK41CM-107	E CAPACITOR
	C144	QEK61CM-106G	E CAPACITOR
	C145	PU54990-3	E CAPACITOR
	C146	PU54990-3	E CAPACITOR
	C147	QER61CM-476	E CAPACITOR
	C148	QCF11HP-223	CAPACITOR
	C149	QEK41CM-107	E CAPACITOR
	C150	QEK41CM-107	E CAPACITOR

#⚠	REF NO.	PART NO.	PART NAME, DESCRIPTION
	C151	PU54990-3	E CAPACITOR
	C152	PU54990-3	E CAPACITOR
	C153	QCS31HJ-150	CAPACITOR
	C155	QER61CM-476	E CAPACITOR
	C156	QCF11HP-223	CAPACITOR
	C157	QER41EM-475	E CAPACITOR
	C158	QCS31HJ-270	CAPACITOR
	C159	QCS31HJ-270	CAPACITOR
	C160	QRD161J-0R0	RESISTOR
	C161	QER40JM-227	E CAPACITOR
	C162	QCS31HJ-9R0	CAPACITOR
	C163	QCS31HJ-820	CAPACITOR
	C164	QCS31HJ-680	CAPACITOR
	C165	QFN31HK-223	M CAPACITOR
	C166	QFN31HK-223	M CAPACITOR
	C167	QCF11HP-223	CAPACITOR
	C168	QETA0JM-477	E CAPACITOR
	C169	QCF11HP-223	CAPACITOR
	C170	QCF11HP-223	CAPACITOR
	C171	QCF11HP-223	CAPACITOR
	C172	QCS11HJ-220	CAPACITOR
	C173	QCS11HJ-9R0	CAPACITOR
	C174	QCS11HJ-121	CAPACITOR
	C175	QCS11HJ-470	CAPACITOR
	C176	QCS11HJ-151	CAPACITOR
	L1	PU48530-121J	COIL
	L2	PU48530-680J	COIL
	L3	PU48530-221J	COIL
	L4	PU48530-221J	COIL
	L5	PU48530-221J	COIL
	L6	PU48530-680J	COIL
	L7	PU48530-221J	COIL
	L8	PU48530-221J	COIL
	L9	PU48530-3R9J	COIL
	L10	PU48530-560J	COIL
	L11	PU48530-221J	COIL
	L12	PU48530-221J	COIL
	L13	PU48530-680J	COIL
	L14	PU48530-330J	COIL
	L15	PU48530-221J	COIL
	L16	PU48530-221J	COIL
	L17	PU48530-221J	COIL
	L18	PU48530-680J	COIL
	L19	PU48530-221J	COIL
	L20	PU48530-221J	COIL
	L21	PU48530-221J	COIL
	L22	PU48530-221J	COIL
	L23	PU48530-221J	COIL
	L24	PU48530-330J	COIL
	L26	PU48530-221J	COIL
	L27	PU48530-221J	COIL
	L28	PU48530-221J	COIL
	L29	PU48530-221J	COIL
	L30	PU48530-221J	COIL
	L31	PU48530-221J	COIL
	L32	PU48530-680J	COIL
	L33	PU48530-471J	COIL
	L34	PU48530-471J	COIL
	SW1	PU54440	SWITCH
	SW2	PU54440	SWITCH
	CP1	QRD167J-0R0	RESISTOR
	CP2	QRD167J-0R0	RESISTOR
	HD1	PGZ00606-02	PWB HOLDER, X4
	SPC1	PGZ00605-02	PWB SPACER, X4
	J103	ML-G00698A	PB COLOR WIRE

#⚠	REF NO.	PART NO.	PART NAME, DESCRIPTION
	TP1	PU54983	TEST PIN, X6
	CN2	PGZ00421-64	MALE CONNECTOR

****

****
* 15. PB COLOR BOARD ASSEMBLY <03> *
****

	PWBA	PGE20219A	PB COLOR PWB ASSY
	IC1	TC4069UBP	IC
	IC2	AN6360	IC
	IC3	AN608P	IC
	IC4	TA7348P	IC
	IC5	AN607P	IC
	IC6	TA7348P	IC
	IC7	AN6371	IC
	IC8	TA7347P	IC
	IC9	AN6362	IC
	IC10	TC4538BP	IC
	IC11	BA401	IC
	IC12	BA401	IC
	IC13	AN6371	IC
	IC14	AN6371	IC
	IC15	TC4538BP	IC
	IC16	TC4538BP	IC
	IC17	TC4538BP	IC
	IC18	AN608P	IC
	Q1	2SC2778C	TRANSISTOR
	Q2	2SC2778C	TRANSISTOR
	Q3	2SC2778C	TRANSISTOR
	Q4	2SC2778C	TRANSISTOR
	Q5	2SC2778C	TRANSISTOR
	Q6	2SC2778C	TRANSISTOR
	Q7	DTC144EK	TRANSISTOR
	Q8	2SC2778C	TRANSISTOR
	Q9	DTC144EK	TRANSISTOR
	Q10	2SC2778C	TRANSISTOR
	Q11	2SC2778C	TRANSISTOR
	Q12	2SC2778C	TRANSISTOR
	Q13	2SC2778C	TRANSISTOR
	Q15	2SC2778C	TRANSISTOR
	Q16	2SC2778C	TRANSISTOR
	Q17	2SC2778C	TRANSISTOR
	Q18	2SC2778C	TRANSISTOR
	Q19	2SK30A-OY	TRANSISTOR
	Q20	2SC2778C	TRANSISTOR
	Q21	DTC144EK	TRANSISTOR
	Q22	2SC2778C	TRANSISTOR
	Q23	DTC144EK	TRANSISTOR
	Q24	2SK30A-OY	TRANSISTOR
	Q25	2SC2778C	TRANSISTOR
	Q26	2SC2778C	TRANSISTOR
	Q27	DTC144EK	TRANSISTOR
	Q28	DTC144EK	TRANSISTOR
	Q29	DTC144EK	TRANSISTOR
	Q30	2SC2778C	TRANSISTOR
	Q31	2SC2778C	TRANSISTOR
	Q32	DTC144EK	TRANSISTOR
	Q34	DTC114EK	DIGI TR
	Q35	DTC114EK	DIGI TR
	Q37	DTC144ES	TRANSISTOR
	Q38	DTC114ES	DIGI TR
	Q39	DTC114EF	DIGI TR
	D1	1SS133	DIODE
	D2	1SS133	DIODE
	D3	1SS133	DIODE
	D4	1SS133	DIODE
	D5	1SS133	DIODE
	D7	1SS133	DIODE
	D8	1SS133	DIODE
	D9	RD6.8EB3	ZENER DIODE
	D10	1SS133	DIODE
	D11	1SS133	DIODE
	D12	1SS133	DIODE
	R1	QRSA08J-104YN	RESISTOR
	R2	QRSA08J-104YN	RESISTOR
	R3	QRSA08J-104YN	RESISTOR
	R4	QRSA08J-104YN	RESISTOR
	R5	QRSA08J-104YN	RESISTOR
	R6	QRSA08J-104YN	RESISTOR
	R7	QRSA08J-103YN	RESISTOR
	R8	QRSA08J-103YN	RESISTOR
	R9	QRSA08J-103YN	RESISTOR
	R10	QRSA08J-103YN	RESISTOR
	R11	QRSA08J-103YN	RESISTOR
	R12	QRSA08J-103YN	RESISTOR
	R13	QRSA08J-102YN	RESISTOR
	R14	QRSA08J-824YN	RESISTOR
	R15	QRSA08J-183YN	RESISTOR
	R16	QRSA08J-102YN	RESISTOR
	R17	QRSA08J-334YN	RESISTOR
	R18	QRSA08J-562YN	RESISTOR
	R19	QRSA08J-392YN	RESISTOR
	R20	QRSA08J-681YN	RESISTOR
	R21	QRSA08J-221YN	RESISTOR
	R22	QRSA08J-682YN	RESISTOR
	R23	QRSA08J-102YN	RESISTOR
	R24	QRSA08J-751YN	RESISTOR
	R25	QRSA08J-271YN	RESISTOR
	R26	QRSA08J-471YN	RESISTOR
	R27	QRSA08J-153YN	RESISTOR
	R28	QRSA08J-682YN	RESISTOR
	R29	QRSA08J-332YN	RESISTOR
	R30	QRSA08J-272YN	RESISTOR
	R31	QVZ3513-101	V RESISTOR,N DG COMP
	R32	QRSA08J-103YN	RESISTOR
	R33	QRSA08J-103YN	RESISTOR
	R34	QRSA08J-472YN	RESISTOR
	R35	QRSA08J-331YN	RESISTOR
	R36	QRSA08J-472YN	RESISTOR
	R37	QRSA08J-103YN	RESISTOR
	R38	QRSA08J-272YN	RESISTOR
	R39	QRSA08J-272YN	RESISTOR
	R40	QRSA08J-152YN	RESISTOR
	R41	QRSA08J-471YN	RESISTOR
	R42	QRSA08J-102YN	RESISTOR
	R43	QRSA08J-181YN	RESISTOR
	R44	QRSA08J-333YN	RESISTOR
	R45	QRSA08J-333YN	RESISTOR
	R46	QRSA08J-223YN	RESISTOR
	R47	QRSA08J-223YN	RESISTOR
	R48	QRSA08J-222YN	RESISTOR
	R49	QRSA08J-391YN	RESISTOR
	R50	QRSA08J-181YN	RESISTOR
	R51	QRSA08J-221YN	RESISTOR
	R52	QRSA08J-392YN	RESISTOR
	R53	QRSA08J-181YN	RESISTOR
	R54	QRSA08J-333YN	RESISTOR

PB COLOR

#⚠	REF NO.	PART NO.	PART NAME, DESCRIPTION
	R55	QRSA08J-333YN	RESISTOR
	R56	QRSA08J-681YN	RESISTOR
	R57	QRD161J-750	RESISTOR
	R60	QRSA08J-223YN	RESISTOR
	R61	QRSA08J-223YN	RESISTOR
	R62	QRSA08J-223YN	RESISTOR
	R63	QRSA08J-223YN	RESISTOR
	R64	QRSA08J-472YN	RESISTOR
	R65	QRSA08J-103YN	RESISTOR
	R66	QRSA08J-393YN	RESISTOR
	R67	QRSA08J-0R0Y	RESISTOR
	R68	QRSA08J-222YN	RESISTOR
	R69	QRSA08J-152YN	RESISTOR
	R70	QRSA08J-391YN	RESISTOR
	R71	QRSA08J-473YN	RESISTOR
	R72	QRSA08J-154YN	RESISTOR
	R73	QRSA08J-222YN	RESISTOR
	R74	QRSA08J-682YN	RESISTOR
	R75	QRSA08J-122YN	RESISTOR
	R76	QRSA08J-102YN	RESISTOR
	R77	QRSA08J-472YN	RESISTOR
	R78	QRSA08J-182YN	RESISTOR
	R79	QRSA08J-274YN	RESISTOR
	R80	QRSA08J-562YN	RESISTOR
	R81	QRSA08J-562YN	RESISTOR
	R82	QRSA08J-334YN	RESISTOR
	R83	QRSA08J-104YN	RESISTOR
	R84	QRSA08J-473YN	RESISTOR
	R85	QRSA08J-181YN	RESISTOR
	R86	QRSA08J-102YN	RESISTOR
	R87	QRSA08J-471YN	RESISTOR
	R88	QRSA08J-472YN	RESISTOR
	R89	QRSA08J-122YN	RESISTOR
	R90	QVZ3513-102	V RESISTOR,AFC
	R91	QRD121J-681	RESISTOR
	R92	QRSA08J-222YN	RESISTOR
	R93	QRSA08J-562YN	RESISTOR
	R94	QRSA08J-471YN	RESISTOR
	R95	QRSA08J-562YN	RESISTOR
	R96	QRSA08J-392YN	RESISTOR
	R97	QRSA08J-332YN	RESISTOR
	R98	QRSA08J-222YN	RESISTOR
	R99	QRSA08J-103YN	RESISTOR
	R100	QRSA08J-103YN	RESISTOR
	R101	QRSA08J-223YN	RESISTOR
	R102	QRSA08J-103YN	RESISTOR
	R103	QVZ3513-223	V RESISTOR,BURST GATE END
	R104	QRSA08J-472YN	RESISTOR
	R105	QVZ3513-103	V R,BURST GATE START
	R106	QRSA08J-391YN	RESISTOR
	R107	QRSA08J-561YN	RESISTOR
	R108	QRSA08J-562YN	RESISTOR
	R109	QRSA08J-272YN	RESISTOR
	R110	QRSA08J-562YN	RESISTOR
	R111	QRSA08J-562YN	RESISTOR
	R112	QRSA08J-333YN	RESISTOR
	R113	QRSA08J-154YN	RESISTOR
	R114	QRSA08J-222YN	RESISTOR
	R115	QRSA08J-182YN	RESISTOR
	R116	QRSA08J-392YN	RESISTOR
	R117	QRSA08J-274YN	RESISTOR
	R118	QRSA08J-223YN	RESISTOR
	R119	QRSA08J-103YN	RESISTOR
	R120	QRSA08J-102YN	RESISTOR
	R121	QRD161J-821	RESISTOR
	R122	QRSA08J-102YN	RESISTOR
	R123	QRSA08J-102YN	RESISTOR

#⚠	REF NO.	PART NO.	PART NAME, DESCRIPTION
	R124	QRD161J-102	RESISTOR
	R125	QRSA08J-102YN	RESISTOR
	R126	QRSA08J-154YN	RESISTOR
	R127	QRSA08J-182YN	RESISTOR
	R128	QRSA08J-222YN	RESISTOR
	R129	QRSA08J-274YN	RESISTOR
	R130	QRSA08J-392YN	RESISTOR
	R131	QRSA08J-562YN	RESISTOR
	R132	QVZ3513-104	V RESISTOR,APC COMP2
	R133	QRSA08J-562YN	RESISTOR
	R134	QVZ3513-104	V RESISTOR,APC COMP1
	R135	QRSA08J-223YN	RESISTOR
	R136	QRSA08J-103YN	RESISTOR
	R137	QVZ3513-223	V R,P.BURST GATE END
	R138	QRSA08J-392YN	RESISTOR
	R139	QVZ3513-682	V R,P.BURST GATE START
	R140	QRSA08J-223YN	RESISTOR
	R141	QRSA08J-103YN	RESISTOR
	R142	QVZ3513-223	V R,P.BURST DELETE END
	R143	QRSA08J-472YN	RESISTOR
	R144	QVZ3513-103	V R,P.BURST DELETE START
	R145	QRSA08J-223YN	RESISTOR
	R146	QRSA08J-102YN	RESISTOR
	R147	QRSA08J-272YN	RESISTOR
	R148	QVZ3513-222	V R,DELETE DC BAL
	R149	QRSA08J-682YN	RESISTOR
	R150	QRSA08J-223YN	RESISTOR
	R151	QRSA08J-682YN	RESISTOR
	R152	QRSA08J-102YN	RESISTOR
	R153	QRSA08J-561YN	RESISTOR
	R154	QRSA08J-102YN	RESISTOR
	R155	QRSA08J-822YN	RESISTOR
	R156	QRSA08J-102YN	RESISTOR
	R157	QVZ3513-101	V RESISTOR,S DG COMP
	R158	QRSA08J-0R0Y	RESISTOR
	R159	QVZ3513-222	V RESISTOR,DUB C OUT LEVE
	R160	QRSA08J-102YN	RESISTOR
	R161	QRSA08J-334YN	RESISTOR
	R162	QRSA08J-332YN	RESISTOR
	R163	QRD161J-103	RESISTOR
	R164	QRD161J-103	RESISTOR
	R165	QRD161J-101	RESISTOR
	C1	QCYA1HK-223	CAPACITOR
	C2	QER61CM-476	E CAPACITOR
	C3	QFN31HK-333	M CAPACITOR
	C4	QCYA1HK-223	CAPACITOR
	C5	QFN31HK-823	M CAPACITOR
	C6	QFN31HK-103	M CAPACITOR
	C7	QCYA1HK-223	CAPACITOR
	C8	QCS31HJ-560	CAPACITOR
	C9	QFN31HK-223	M CAPACITOR
	C10	QCS31HJ-5R0	CAPACITOR
	C11	QFN31HK-103	M CAPACITOR
	C12	QER61CM-476	E CAPACITOR
	C13	QCYA1HK-223	CAPACITOR
	C14	QFN31HK-103	M CAPACITOR
	C15	QCYA1HK-223	CAPACITOR
	C16	QER61CM-476	E CAPACITOR
	C17	QCS31HJ-821	CAPACITOR
	C18	QCYA1HK-223	CAPACITOR
	C19	QER61CM-476	E CAPACITOR
	C20	QER61HM-225GZ	E CAPACITOR
	C21	QER61HM-225GZ	E CAPACITOR
	C22	QER61CM-476	E CAPACITOR
	C23	QFN31HK-823	M CAPACITOR
	C24	QER60JM-107	E CAPACITOR

#⚠	REF NO.	PART NO.	PART NAME, DESCRIPTION
	C25	QFN31HK-103	M CAPACITOR
	C26	QER61CM-476	E CAPACITOR
	C27	QCYA1HK-223	CAPACITOR
	C28	QCYA1HK-223	CAPACITOR
	C29	QFN31HK-103	M CAPACITOR
	C30	QFN31HK-103	M CAPACITOR
	C31	QER61CM-476	E CAPACITOR
	C32	QCYA1HK-223	CAPACITOR
	C33	QFN31HK-103	M CAPACITOR
	C34	QFN31HK-103	M CAPACITOR
	C35	QCYA1HK-223	CAPACITOR
	C36	QFN31HK-103	M CAPACITOR
	C37	QCYA1HK-223	CAPACITOR
	C38	QFN31HK-103	M CAPACITOR
	C39	QFN31HK-103	M CAPACITOR
	C40	QFN31HK-223	M CAPACITOR
	C41	QFN31HK-103	M CAPACITOR
	C42	QER61CM-476	E CAPACITOR
	C43	QCYA1HK-223	CAPACITOR
	C44	QFN31HK-223	M CAPACITOR
	C45	QCYA1HK-223	CAPACITOR
	C46	QER61CM-476	E CAPACITOR
	C47	QER61CM-476	E CAPACITOR
	C48	QCYA1HK-223	CAPACITOR
	C49	QAT3001-016	T CAPACITOR,SC ADJ
	C50	QCT05CH-120	CAPACITOR
	C51	QCS31HJ-121	CAPACITOR
	C52	QCS31HJ-121	CAPACITOR
	C53	QFN31HK-103	M CAPACITOR
	C54	QCYA1HK-223	CAPACITOR
	C55	QFN31HK-103	M CAPACITOR
	C56	QER61HM-105GZ	E CAPACITOR
	C57	QFN31HK-103	M CAPACITOR
	C58	QCS31HJ-150	CAPACITOR
	C59	QCS31HJ-101	CAPACITOR
	C60	QCYA1HK-223	CAPACITOR
	C61	QCS31HJ-220	CAPACITOR
	C62	QCYA1HK-223	CAPACITOR
	C63	QER61CM-476	E CAPACITOR
	C64	QCS31HJ-6R0	CAPACITOR
	C65	QAT3001-016	T CAPACITOR,APC ADJ
	C66	QER61HM-475	E CAPACITOR
	C67	QCS31HJ-4R0	CAPACITOR
	C68	QFN31HK-103	M CAPACITOR
	C69	QFN31HK-223	M CAPACITOR
	C70	QCYA1HK-223	CAPACITOR
	C71	QER61HM-475	E CAPACITOR
	C72	QFN41HK-104	M CAPACITOR
	C73	QFN31HK-223	M CAPACITOR
	C74	QFN31HK-223	M CAPACITOR
	C75	QER61CM-476	E CAPACITOR
	C76	QCYA1HK-223	CAPACITOR
	C77	QCS11HJ-821	CAPACITOR
	C78	QCS31HJ-221	CAPACITOR
	C79	QCT25CH-121	CAPACITOR
	C80	QCT25CH-181	CAPACITOR
	C81	QFN31HK-183	M CAPACITOR
	C82	QER61CM-106GZ	E CAPACITOR
	C83	QFN31HK-102	M CAPACITOR
	C84	QFN41HK-104	M CAPACITOR
	C85	QFN31HK-104	M CAPACITOR
	C86	QER61HM-105GZ	E CAPACITOR
	C87	QCYA1HK-223	CAPACITOR
	C88	QEK41CM-227	E CAPACITOR
	C89	QCYA1HK-223	CAPACITOR
	C90	QER61CM-476	E CAPACITOR
	C91	QER61CM-106GZ	E CAPACITOR

#⚠	REF NO.	PART NO.	PART NAME, DESCRIPTION
	C92	QCT25CH-101	CAPACITOR
	C93	QCT25CH-271	M CAPACITOR
	C94	QCYA1HK-223	CAPACITOR
	C95	QER61CM-476	E CAPACITOR
	C96	QFN31HK-333	M CAPACITOR
	C97	QER61CM-106GZ	E CAPACITOR
	C98	QFN31HK-222	M CAPACITOR
	C99	QFN31HK-333	M CAPACITOR
	C100	QER61CM-106GZ	E CAPACITOR
	C101	QCYA1HK-223	CAPACITOR
	C102	QER61CM-476	E CAPACITOR
	C103	QER61HM-105GZ	E CAPACITOR
	C104	QFN31HK-103	M CAPACITOR
	C105	QFN31HK-103	M CAPACITOR
	C106	QCS31HJ-150	CAPACITOR
	C107	QCS31HJ-101	CAPACITOR
	C108	QCYA1HK-223	CAPACITOR
	C109	QCYA1HK-223	CAPACITOR
	C110	QCYA1HK-223	CAPACITOR
	C111	QER61CM-476	E CAPACITOR
	C112	QCS31HJ-6R0	CAPACITOR
	C113	QAT3001-016	T CAP,APC FOR COLOR FRAME
	C114	QCS31HJ-4R0	CAPACITOR
	C115	QFN31HK-103	M CAPACITOR
	C116	QFN31HK-103	M CAPACITOR
	C117	QER61CM-106GZ	E CAPACITOR
	C118	QFN31HK-103	M CAPACITOR
	C119	QCT25CH-101	CAPACITOR
	C120	QCYA1HK-223	CAPACITOR
	C121	QCT25CH-101	CAPACITOR
	C122	QER61HM-105GZ	E CAPACITOR
	C123	QFN31HK-103	M CAPACITOR
	C124	QFN31HK-103	M CAPACITOR
	C125	QCS31HJ-150	CAPACITOR
	C126	QCS31HJ-101	CAPACITOR
	C127	QCYA1HK-223	CAPACITOR
	C128	QFN31HK-103	M CAPACITOR
	C129	QCYA1HK-223	CAPACITOR
	C130	QER61CM-476	E CAPACITOR
	C131	QCS31HJ-6R0	CAPACITOR
	C132	QCS31HJ-4R0	CAPACITOR
	C133	QFN31HK-103	M CAPACITOR
	C134	QFN31HK-103	M CAPACITOR
	C135	QER61CM-476	E CAPACITOR
	C136	QFN31HK-333	M CAPACITOR
	C137	QFN31HK-473	M CAPACITOR
	C138	QCYA1HK-223	CAPACITOR
	C139	QER61CM-476	E CAPACITOR
	C140	QCT25CH-101	CAPACITOR
	C141	QCT25CH-271	M CAPACITOR
	C142	QCYA1HK-223	CAPACITOR
	C143	QER61CM-476	E CAPACITOR
	C144	QCT25CH-101	CAPACITOR
	C145	QCT25CH-271	M CAPACITOR
	C146	QCYA1HK-223	CAPACITOR
	C147	QER61CM-476	E CAPACITOR
	C148	QFN31HK-223	M CAPACITOR
	C149	QER61CM-476	E CAPACITOR
	C150	QCYA1HK-223	CAPACITOR
	C151	QFN31HK-103	M CAPACITOR
	C152	QFN31HK-223	M CAPACITOR
	C153	QCYA1HK-223	CAPACITOR
	C154	QER61CM-476	E CAPACITOR
	C155	QER61CM-476	E CAPACITOR
	C156	QER41HM-105	E CAPACITOR
	C157	QCS31HJ-220	CAPACITOR
	C158	QFN41HK-563	M CAPACITOR
	C159	QFN31HK-223	M CAPACITOR

PB COLOR, Y/C SEPARATOR

#⚠	REF NO.	PART NO.	PART NAME, DESCRIPTION
	C160	QCYA1HK-223	CAPACITOR
	C161	QCS11HJ-4R0	CAPACITOR
	L1	PU48530-221J	COIL
	L2	PU48530-221J	COIL
	L3	PU48530-101J	COIL
	L4	PU48530-100J	COIL
	L5	PU48530-221J	COIL
	L6	PU48530-221J	COIL
	L7	PU48530-221J	COIL
	L8	PU52108-101K	P.THERMISTOR
	L9	PU48530-221J	COIL
	L10	PU48530-820J	COIL
	L11	PU48530-560J	COIL
	L12	PU48530-221J	COIL
	L13	PU48530-221J	COIL
	L14	PU48530-221J	COIL
	L15	PU48530-221J	COIL
	L16	PU48530-221J	COIL
	L17	PU48530-560J	COIL
	L18	PU48530-560J	COIL
	L19	PU48530-221J	COIL
	L20	PU48530-560J	COIL
	L21	PU48530-560J	COIL
	L22	PU48530-221J	COIL
	L23	PU48530-221J	COIL
	L24	PU48530-221J	COIL
	L25	PU48530-221J	COIL
	L26	PU48530-560J	COIL
	L27	PGZ00121-102	COIL
	L28	PGZ00121-102	COIL
	L29	PU48530-221J	COIL
	L30	PU48530-820J	COIL
	L31	PU30284-28R	COIL
	BPF1	PGZ00191	BAND PASS FILTER
	BPF2	PU54410-2	BAND PASS FILTER
	DL1	PGZ00131-015	DELAY LINE
	DL2	PGZ00131-002	DELAY LINE
	DL3	PGZ01002	EQUALIZER
	DL4	PGZ01002	EQUALIZER
	DL5	PGZ01002	EQUALIZER
	X1	PU31449-2	CRYSTAL RESONATOR
	X2	PU46040	CRYSTAL RESONATOR
	X3	PU31449-2	CRYSTAL RESONATOR
	K1	PGZ00354	FERRITE BEADS(K1,2), X2
	CP1	QRD167J-0R0	RESISTOR
	TH1	ERT-D2FHL333S	THERMISTOR
	HD1	PGZ00606-02	PWB HOLDER, X4
	SLD1	PGD40841-01-01	SHIELD CASE
	SLD2	PGD40842-01-01	SHIELD CAP
	SLD3	PRS30013-03	INSULATOR
	SPC1	PGZ00605-02	PWB SPACER, X4
	TP1	PU54983	TEST PIN , X22
	CN1	PGZ00421-100	MALE CONNECTOR
		-REC AFC MODULE-	
	MOD1	PGE30112B	REC AFC PWB ASSY
	IC1	AN6362S	IC

#⚠	REF NO.	PART NO.	PART NAME, DESCRIPTION
	R1	QRSA08J-473YN	RESISTOR
	R3	QRSA08J-122YN	RESISTOR
	R4	QRSA08J-681YN	RESISTOR
	R6	QRSA08J-562YN	RESISTOR
	R9	QRSA08J-123YN	RESISTOR
	R10	QRSA08J-471YN	RESISTOR
	R11	QRSA08J-562YN	RESISTOR
	R12	QRSA08J-222YN	RESISTOR
	R13	QVZ3531-471	V RESISTOR, AFC2
	C1	QCTA1CH-271	CAPACITOR
	C2	QCTA1CH-681	CAPACITOR
	C3	QCTA1CH-121	CAPACITOR
	C4	QCTA1CH-181	CAPACITOR
	C5	QFN41HJ-273	M CAPACITOR
	C6	NEA11CM-106RZ	E CAPACITOR
	C7	QCYA1HK-821	CAPACITOR
	C8	QER41CM-476	E CAPACITOR
	C9	QCYA1HJ-223	CAPACITOR
	C10	QFN41HK-104	M CAPACITOR
	C11	QCYA1HK-102	CAPACITOR
	C12	QCFA1EZ-104	CAPACITOR
	C13	QEF81AM-105	TANTAL CAPACITOR
	C15	QCYA1HK-223	CAPACITOR
	C16	QCYA1HK-223	CAPACITOR
	C17	QER41CM-476	E CAPACITOR
	L1	PU48530-680J	COIL
	L2	PU48530-101J	COIL
	TP1	PU54983	TEST PIN

16. Y/C SEPARATOR BOARD ASSEMBLY <04>

PWBA	PGE20214A	Y/C SEPARATOR PWB ASSY
IC1	8VT15	IC
IC2	CXL1004P	IC
IC3	CXL1004P	IC
IC4	AN608P	IC
IC5	8VT15	IC
Q1	2SC2647C	TRANSISTOR
Q2	2SC2647C	TRANSISTOR
Q3	2SB641Q	TRANSISTOR
Q4	2SC2647C	TRANSISTOR
Q5	2SC2647C	TRANSISTOR
Q6	2SC2647C	TRANSISTOR
Q7	2SC2206(C)	TRANSISTOR
Q8	2SC2206(C)	TRANSISTOR
Q9	2SC2206(C)	TRANSISTOR
Q10	2SC2206(C)	TRANSISTOR
Q11	2SC2206(C)	TRANSISTOR
Q12	2SC2206(C)	TRANSISTOR
Q13	2SA1254(C)	TRANSISTOR
Q14	2SA1254(C)	TRANSISTOR
Q15	2SA1254(C)	TRANSISTOR
Q16	2SC2647C	TRANSISTOR
Q17	2SC2647C	TRANSISTOR
Q18	2SC2647C	TRANSISTOR
Q19	2SC2647C	TRANSISTOR
Q21	2SC2647C	TRANSISTOR
Q22	2SC2647C	TRANSISTOR
Q23	2SB641Q	TRANSISTOR
Q24	2SC2647C	TRANSISTOR
Q25	2SC2647C	TRANSISTOR
Q26	2SC2647C	TRANSISTOR

#⚠	REF NO.	PART NO.	PART NAME, DESCRIPTION
	Q27	2SC2206(C)	TRANSISTOR
	Q28	2SC2206(C)	TRANSISTOR
	Q29	2SC2206(C)	TRANSISTOR
	Q30	2SC2206(C)	TRANSISTOR
	Q31	2SC2206(C)	TRANSISTOR
	Q32	2SC2206(C)	TRANSISTOR
	Q33	2SA1254(C)	TRANSISTOR
	Q34	2SA1254(C)	TRANSISTOR
	Q35	2SA1254(C)	TRANSISTOR
	Q36	2SC2647C	TRANSISTOR
	Q37	2SC2647C	TRANSISTOR
	Q38	2SC2647C	TRANSISTOR
	Q39	2SC2647C	TRANSISTOR
	Q40	2SB641Q	TRANSISTOR
	Q41	2SC2647C	TRANSISTOR
	Q42	2SC2647C	TRANSISTOR
	Q43	2SC2647C	TRANSISTOR
	Q44	2SB641Q	TRANSISTOR
	Q45	2SC2647C	TRANSISTOR
	R1	QRD161J-333	RESISTOR
	R2	QRD161J-333	RESISTOR
	R3	QRD161J-471	RESISTOR
	R4	QRD161J-222	RESISTOR
	R5	QRD161J-222	RESISTOR
	R6	QRD161J-391	RESISTOR
	R7	QRD161J-391	RESISTOR
	R8	QRD161J-102	RESISTOR
	R9	QRD161J-393	RESISTOR
	R10	QRD161J-223	RESISTOR
	R11	QRD161J-393	RESISTOR
	R12	QRD161J-223	RESISTOR
	R13	QRD161J-472	RESISTOR
	R14	QRD161J-561	RESISTOR
	R15	QRD161J-102	RESISTOR
	R16	QVZ3513-152	V RESISTOR,MID IN LEVEL
	R17	QRD161J-222	RESISTOR
	R18	QRD161J-222	RESISTOR
	R19	QRD161J-471	RESISTOR
	R20	QRD161J-222	RESISTOR
	R21	QRD161J-473	RESISTOR
	R22	QRD161J-473	RESISTOR
	R23	QRD161J-223	RESISTOR
	R24	QRD161J-222	RESISTOR
	R25	QRD161J-223	RESISTOR
	R26	QRD161J-181	RESISTOR
	R27	QRD161J-223	RESISTOR
	R28	QRD161J-181	RESISTOR
	R29	QRD161J-222	RESISTOR
	R30	QRD161J-223	RESISTOR
	R31	QRD161J-181	RESISTOR
	R32	QRD161J-223	RESISTOR
	R33	QRD161J-181	RESISTOR
	R34	QRD161J-222	RESISTOR
	R35	QRD161J-223	RESISTOR
	R36	QRD161J-222	RESISTOR
	R37	QRD161J-102	RESISTOR
	R38	QRD161J-471	RESISTOR
	R39	QRD161J-561	RESISTOR
	R40	QRD161J-222	RESISTOR
	R41	QRD161J-104	RESISTOR
	R42	QVZ3513-103	V RESISTOR,CCD BIAS1
	R43	QVZ3513-472	V RESISTOR,CCD BIAS2
	R44	QRD161J-333	RESISTOR
	R45	QRD161J-223	RESISTOR
	R46	QRD161J-181	RESISTOR
	R47	QRD161J-102	RESISTOR
	R48	QRD161J-471	RESISTOR

#⚠	REF NO.	PART NO.	PART NAME, DESCRIPTION
	R49	QVZ3513-102	V RESISTOR,CCD IN LEVEL
	R50	QRD161J-682	RESISTOR
	R51	QRD161J-104	RESISTOR
	R52	QVZ3513-103	V RESISTOR,CCD BIAS3
	R53	QVZ3513-472	V RESISTOR,CCD BIAS4
	R54	QRD161J-333	RESISTOR
	R55	QRD161J-223	RESISTOR
	R56	QRD161J-222	RESISTOR
	R57	QRD161J-821	RESISTOR
	R58	QRD161J-181	RESISTOR
	R59	QRD161J-102	RESISTOR
	R60	QRD161J-102	RESISTOR
	R61	QRD161J-102	RESISTOR
	R62	QRD161J-332	RESISTOR
	R63	QRD161J-101	RESISTOR
	R64	QVZ3513-102	V RESISTOR,2H DL LEV
	R65	QRD161J-223	RESISTOR
	R66	QRD161J-103	RESISTOR
	R67	QRD161J-102	RESISTOR
	R68	QVZ3513-331	V RESISTOR,2H DL
	R69	QRD161J-102	RESISTOR
	R70	QRD161J-181	RESISTOR
	R71	QRD161J-222	RESISTOR
	R72	QRD161J-153	RESISTOR
	R73	QRD161J-223	RESISTOR
	R74	QRD161J-102	RESISTOR
	R75	QRD161J-102	RESISTOR
	R76	QRD161J-222	RESISTOR
	R77	QRD161J-561	RESISTOR
	R78	QRD161J-152	RESISTOR
	R79	QRD161J-152	RESISTOR
	R80	QRD161J-681	RESISTOR
	R81	QRD161J-152	RESISTOR
	R82	QRD161J-473	RESISTOR
	R83	QRD161J-473	RESISTOR
	R84	QRD161J-223	RESISTOR
	R85	QRD161J-222	RESISTOR
	R86	QRD161J-181	RESISTOR
	R87	QRD161J-223	RESISTOR
	R88	QRD161J-223	RESISTOR
	R89	QRD161J-181	RESISTOR
	R90	QRD161J-222	RESISTOR
	R91	QRD161J-181	RESISTOR
	R92	QRD161J-223	RESISTOR
	R93	QRD161J-223	RESISTOR
	R94	QRD161J-181	RESISTOR
	R95	QRD161J-222	RESISTOR
	R96	QRD161J-223	RESISTOR
	R97	QRD161J-222	RESISTOR
	R98	QRD161J-223	RESISTOR
	R99	QRD161J-103	RESISTOR
	R100	QRD161J-102	RESISTOR
	R101	QRD161J-102	RESISTOR
	R102	QRD161J-222	RESISTOR
	R103	QVZ3513-102	V RESISTOR,YH LEVEL
	R104	QRD161J-102	RESISTOR
	R105	QRD161J-222	RESISTOR
	R106	QRD161J-102	RESISTOR
	R107	QRD161J-223	RESISTOR
	R108	QRD161J-103	RESISTOR
	R109	QRD161J-471	RESISTOR
	R110	QRD161J-471	RESISTOR
	R111	QVZ3513-102	V RESISTOR,C COMB DL
	R112	QVZ3513-222	V RESISTOR,C COMB LEVEL
	R113	QRD161J-821	RESISTOR
	R114	QRD161J-221	RESISTOR
	R115	QRD161J-222	RESISTOR

Y/C SEPARATOR

#⚠	REF NO.	PART NO.	PART NAME, DESCRIPTION
	R116	QRD161J-393	RESISTOR
	R117	QRD161J-223	RESISTOR
	R118	QRD161J-393	RESISTOR
	R119	QRD161J-223	RESISTOR
	R120	QRD161J-562	RESISTOR
	R121	QRD161J-471	RESISTOR
	R122	QVZ3513-222	V RESISTOR,Y OUT LEVEL
	R123	QRD161J-822	RESISTOR
	R124	QRD161J-393	RESISTOR
	R125	QRD161J-223	RESISTOR
	R126	QRD161J-222	RESISTOR
	R127	QVZ3513-222	V RESISTOR,C OUT LEVEL
	R128	QRD161J-102	RESISTOR
	R129	QRD161J-101	RESISTOR
	R130	QRD161J-222	RESISTOR
	R131	QRD161J-273	RESISTOR
	R132	QRD161J-333	RESISTOR
	R133	QRD161J-102	RESISTOR
	C1	QEK61CM-107	E CAPACITOR
	C2	QER60JM-476	E CAPACITOR
	C3	QER60JM-476	E CAPACITOR
	C4	QER60JM-476	E CAPACITOR
	C5	QCS31HJ-6R0	CAPACITOR
	C6	QCF31HP-223	CAPACITOR
	C7	QER61CM-476	E CAPACITOR
	C8	QER61CM-106GZ	E CAPACITOR
	C9	QER61CM-106GZ	E CAPACITOR
	C10	QER61CM-106GZ	E CAPACITOR
	C11	QER61CM-106GZ	E CAPACITOR
	C12	QER61CM-106GZ	E CAPACITOR
	C13	QER61CM-106GZ	E CAPACITOR
	C14	QER61CM-106GZ	E CAPACITOR
	C15	QER61CM-476	E CAPACITOR
	C16	QCF31HP-223	CAPACITOR
	C17	QCF31HP-103	CAPACITOR
	C18	QEK61CM-107	E CAPACITOR
	C19	QEK61CM-107	E CAPACITOR
	C20	QCF31HP-103	CAPACITOR
	C21	QCF31HP-103	CAPACITOR
	C22	QCF31HP-103	CAPACITOR
	C23	QFN31HK-223	M CAPACITOR
	C24	QER61HM-335GZ	E CAPACITOR
	C25	QFN31HK-473	M CAPACITOR
	C26	QER61HM-335G	E CAPACITOR
	C27	QER61HM-335GZ	E CAPACITOR
	C28	QER61CM-476	E CAPACITOR
	C29	QCF31HP-223	CAPACITOR
	C30	QER61CM-106G	E CAPACITOR
	C31	QCS31HJ-120	CAPACITOR
	C32	QFN31HK-223	M CAPACITOR
	C33	QER61CM-106G	E CAPACITOR
	C34	QFN31HK-223	M CAPACITOR
	C35	QER61HM-335GZ	E CAPACITOR
	C36	QFN31HK-473	M CAPACITOR
	C37	QER61HM-335GZ	E CAPACITOR
	C38	QER61HM-335GZ	E CAPACITOR
	C39	QER61CM-476	E CAPACITOR
	C40	QCF31HP-223	CAPACITOR
	C41	QER61CM-106GZ	E CAPACITOR
	C42	QCF31HP-223	CAPACITOR
	C43	QER61CM-476	E CAPACITOR
	C44	QER61CM-476	E CAPACITOR
	C45	QCF31HP-223	CAPACITOR
	C46	QER61CM-476	E CAPACITOR
	C47	QCF31HP-223	CAPACITOR
	C48	QER61CM-476	E CAPACITOR
	C49	QCF31HP-223	CAPACITOR

#⚠	REF NO.	PART NO.	PART NAME, DESCRIPTION
	C50	QCS31HJ-120	CAPACITOR
	C51	QFN31HK-223	M CAPACITOR
	C52	QCS31HJ-220	CAPACITOR
	C53	QER61CM-106GZ	E CAPACITOR
	C54	QFN31HK-223	M CAPACITOR
	C55	QCS31HJ-101	CAPACITOR
	C56	QFN31HK-223	M CAPACITOR
	C57	QCF31HP-223	CAPACITOR
	C58	QFN31HK-223	M CAPACITOR
	C59	QFN31HK-104	M CAPACITOR
	C60	QER61CM-106GZ	E CAPACITOR
	C61	QER61CM-106GZ	E CAPACITOR
	C62	QER61CM-106GZ	E CAPACITOR
	C63	QER61CM-106GZ	E CAPACITOR
	C64	QER61CM-106GZ	E CAPACITOR
	C65	QER61CM-106GZ	E CAPACITOR
	C66	QER61CM-106GZ	E CAPACITOR
	C67	QER61CM-106GZ	E CAPACITOR
	C68	QER61CM-476	E CAPACITOR
	C69	QCF31HP-223	CAPACITOR
	C70	QFN31HK-223	M CAPACITOR
	C71	QFN31HK-223	M CAPACITOR
	C72	QCS31HJ-560	CAPACITOR
	C73	QFN31HK-104	M CAPACITOR
	C74	QER60JM-476	E CAPACITOR
	C75	QER61CM-476	E CAPACITOR
	C76	QCF31HP-223	CAPACITOR
	C77	QCS31HJ-120	CAPACITOR
	C78	QER61CM-476	E CAPACITOR
	C79	QCF31HP-223	CAPACITOR
	C80	QER60JM-107	E CAPACITOR
	C81	QER61CM-476	E CAPACITOR
	C82	QCF31HP-103	CAPACITOR
	C83	QCF31HP-103	CAPACITOR
	C85	QCS31HJ-471	CAPACITOR
	C86	QER61CM-106GZ	E CAPACITOR
	C87	QER61CM-106GZ	E CAPACITOR
	C88	QER61CM-106GZ	E CAPACITOR
	C89	QFN31HK-223	M CAPACITOR
	C90	QFN31HK-223	M CAPACITOR
	C91	QFN31HK-223	M CAPACITOR
	C92	QFN31HK-223	M CAPACITOR
	L1	PU48530-221J	COIL
	L2	PU48530-221J	COIL
	L3	PU48530-150J	COIL
	L5	PU48530-221J	COIL
	L6	PU48530-221J	COIL
	L7	PU48530-221J	COIL
	L8	PU48530-221J	COIL
	L9	PU48530-150J	COIL
	L11	PU48530-221J	COIL
	L12	PU48530-221J	COIL
	L13	PU48530-221J	COIL
	LPF1	PGZ00693	LOW PASS FILTER
	LPF2	PGZ01005	LOW PASS FILTER
	LPF3	PGZ00693	LOW PASS FILTER
	DL1	PGZ01003	DELAY LINE
	DL2	PGZ00131-003	DELAY LINE
	DL3	PGZ01004	DELAY LINE
	X1	PGZ00957	CRYSTAL
	K1	PGZ00354	FERRITE BEADS(K1-8), X8
	TH1	ERT-D2FHK-202S	THERMISTOR

#⚠	REF NO.	PART NO.	PART NAME, DESCRIPTION
	SLD1	PRS30012C	SHIELD ASS'Y
	SLD2	PRD30254	SHIELD CASE
	SLD3	PRD30255	SHIELD CAP
	TP1	PU54983	TEST PIN, X15
	CN1	PU58844-107	CAP HOUSING
	CN2	PU58844-102	CAP HOUSING
	CN3	PU58844-102	CAP HOUSING
	CP1	QRD167J-0R0	RESISTOR

****

****
* 17. VIDEO PRE/REC AMP BOARD ASSEMBLY <05> *
****

	PWBA	PGE10084B	VIDEO PRE/REC AMP PWB AY
	IC1	AN6392	IC
	IC2	AN6392	IC
	IC3	TA7742P	IC
	IC4	TA7742P	IC
	Q1	2SC2778C	TRANSISTOR
	Q2	2SC2778C	TRANSISTOR
	Q3	2SC2778C	TRANSISTOR
	Q4	2SC2778C	TRANSISTOR
	Q5	2SC2778C	TRANSISTOR
	Q6	2SC2778C	TRANSISTOR
	Q7	DTC144EK	TRANSISTOR
	Q8	DTA114EK	TRANSISTOR
	Q9	DTC144EK	TRANSISTOR
	Q10	2SD601(R)	TRANSISTOR
	Q11	2SD601(R)	TRANSISTOR
	Q12	DTC114EK	TRAMSISTOR
	Q13	2SC2778C	TRANSISTOR
	Q14	2SC2778C	TRANSISTOR
	Q15	2SC2778C	TRANSISTOR
	Q16	2SC2778C	TRANSISTOR
	Q17	2SC2778C	TRANSISTOR
	Q18	2SC2778C	TRANSISTOR
	Q20	2SC2778C	TRANSISTOR
	Q21	2SC2778C	TRANSISTOR
	Q22	2SC2778C	TRANSISTOR
	Q23	2SC2778C	TRANSISTOR
	Q24	2SC2778C	TRANSISTOR
	Q26	2SC2778C	TRANSISTOR
	Q27	2SC2778C	TRANSISTOR
	Q28	2SC2778C	TRANSISTOR
	Q29	2SC2778C	TRANSISTOR
	Q30	2SC2778C	TRANSISTOR
	Q32	2SC2778C	TRANSISTOR
	Q33	2SC2778C	TRANSISTOR
	Q34	2SC2778C	TRANSISTOR
	Q35	2SC2778C	TRANSISTOR
	Q36	2SB709(R)	TRANSISTOR
	Q37	DTC144EK	TRANSISTOR
	D1	1SS133	DIODE
	D2	1SS133	DIODE
	D3	1SS133	DIODE
	R1	QRSA08J-681YN	RESISTOR
	R2	QRSA08J-331YN	RESISTOR
	R3	QVZ3514-331	V RESISTOR,CH1 F
	R4	QRSA08J-390YN	RESISTOR
	R6	QRSA08J-821YN	RESISTOR
	R7	QRSA08J-152YN	RESISTOR
	R8	QRSA08J-104YN	RESISTOR
	R9	QRSA08J-103YN	RESISTOR
	R10	QVZ3514-681	V RESISTOR,CH1 S.F
	R12	QRSA08J-393YN	RESISTOR
	R13	QRSA08J-222YN	RESISTOR
	R14	QRSA08J-681YN	RESISTOR
	R15	QRSA08J-331YN	RESISTOR
	R16	QVZ3514-331	V RESISTOR,CH2 F
	R17	QRSA08J-390YN	RESISTOR
	R19	QRSA08J-821YN	RESISTOR
	R20	QRSA08J-152YN	RESISTOR
	R21	QRSA08J-104YN	RESISTOR
	R22	QRSA08J-103YN	RESISTOR
	R23	QVZ3514-681	V RESISTOR,CH2 S.F
	R25	QRSA08J-393YN	RESISTOR
	R26	QRSA08J-222YN	RESISTOR
	R27	QRSA08J-390YN	RESISTOR
	R28	QRSA08J-390YN	RESISTOR
	R29	QRSA08J-103YN	RESISTOR
	R30	QRSA08J-103YN	RESISTOR
	R31	QRSA08J-103YN	RESISTOR
	R32	QRSA08J-103YN	RESISTOR
	R33	QRSA08J-103YN	RESISTOR
	R34	QRSA08J-182YN	RESISTOR
	R35	QRSA08J-103YN	RESISTOR
	R36	QRSA08J-3R9YN	RESISTOR
	R37	QRSA08J-3R9YN	RESISTOR
	R38	QRSA08J-3R9YN	RESISTOR
	R39	QRSA08J-3R9YN	RESISTOR
	R40	QRSA08J-182YN	RESISTOR
	R41	QVZ3514-221	V RESISTOR,CH1 S.Q
	R42	QRSA08J-391YN	RESISTOR
	R43	QVZ3514-102	V RESISTOR,CH1 Q
	R44	QVZ3514-102	V RESISTOR,CH2 Q
	R45	QRSA08J-391YN	RESISTOR
	R46	QVZ3514-221	V RESISTOR,CH2 S.Q
	R47	QRSA08J-102YN	RESISTOR
	R48	QRSA08J-102YN	RESISTOR
	R49	QRSA08J-271YN	RESISTOR
	R50	QRSA08J-271YN	RESISTOR
	R51	QRSA08J-390YN	RESISTOR
	R52	QRSA08J-390YN	RESISTOR
	R53	QRD161J-222	RESISTOR
	R55	QRD161J-222	RESISTOR
	R56	QRSA08J-222YN	RESISTOR
	R57	QRSA08J-222YN	RESISTOR
	R58	QRSA08J-222YN	RESISTOR
	R59	QRSA08J-222YN	RESISTOR
	R61	QRSA08J-103YN	RESISTOR
	R62	QRD161J-103	RESISTOR
	R63	QVZ3514-221	V RESISTOR,CH2 S.Q
	R64	QRSA08J-391YN	RESISTOR
	R65	QVZ3514-102	V RESISTOR,CH2 Q
	R66	QVZ3514-102	V RESISTOR,CH1 Q
	R67	QRSA08J-391YN	RESISTOR
	R68	QVZ3514-221	V RESISTOR,CH1 S.Q
	R69	QRSA08J-102YN	RESISTOR
	R70	QRSA08J-102YN	RESISTOR
	R71	QRSA08J-271YN	RESISTOR
	R72	QRSA08J-271YN	RESISTOR
	R73	QRSA08J-390YN	RESISTOR
	R74	QRSA08J-390YN	RESISTOR
	R75	QRSA08J-222YN	RESISTOR
	R77	QRSA08J-222YN	RESISTOR
	R78	QRSA08J-222YN	RESISTOR

VIDEO PRE/REC

#⚠	REF NO.	PART NO.	PART NAME, DESCRIPTION
	R79	QRD161J-222	RESISTOR
	R80	QRD161J-222	RESISTOR
	R81	QRSA08J-222YN	RESISTOR
	R82	QRSA08J-103YN	RESISTOR
	R83	QRD161J-103	RESISTOR
	R87	QRSA08J-223YN	RESISTOR
	R88	QRSA08J-333YN	RESISTOR
	R89	QRSA08J-223YN	RESISTOR
	R90	QRSA08J-333YN	RESISTOR
	R91	QRSA08J-223YN	RESISTOR
	R92	QRSA08J-333YN	RESISTOR
	R93	QRSA08J-223YN	RESISTOR
	R94	QRSA08J-333YN	RESISTOR
	R95	QRSA08J-181YN	RESISTOR
	R96	QRSA08J-181YN	RESISTOR
	R97	QRSA08J-102YN	RESISTOR
	R98	QRSA08J-473YN	RESISTOR
	R99	QRSA08J-473YN	RESISTOR
	R100	QRSA08J-223YN	RESISTOR
	R101	QRSA08J-473YN	RESISTOR
	R102	QRSA08J-103YN	RESISTOR
	C1	QCYA1HK-223	CAPACITOR
	C2	QCTA1CH-150	CAPACITOR
	C3	QCYA1HK-223	CAPACITOR
	C4	QCYA1HK-223	CAPACITOR
	C5	QCYA1HK-223	CAPACITOR
	C7	QCTA1CH-680	CAPACITOR
	C8	QCTA1CH-7R0	CAPACITOR
	C9	QCYA1HK-223	CAPACITOR
	C10	QCTA1CH-120	CAPACITOR
	C11	QCYA1HK-103	CAPACITOR
	C12	QER61CM-106	E CAPACITOR
	C13	QER61HM-105	E CAPACITOR
	C14	QCYA1HK-223	CAPACITOR
	C15	QER61CM-476	E CAPACITOR
	C16	QCYA1HK-223	CAPACITOR
	C17	QCTA1CH-150	CAPACITOR
	C18	QCYA1HK-223	CAPACITOR
	C19	QCYA1HK-223	CAPACITOR
	C20	QCYA1HK-223	CAPACITOR
	C22	QCTA1CH-680	CAPACITOR
	C23	QCTA1CH-7R0	CAPACITOR
	C24	QCYA1HK-223	CAPACITOR
	C25	QCTA1CH-120	CAPACITOR
	C26	QCYA1HK-103	CAPACITOR
	C27	QER61CM-106	E CAPACITOR
	C28	QER61HM-105	E CAPACITOR
	C29	QCYA1HK-223	CAPACITOR
	C30	QER61CM-476	E CAPACITOR
	C31	QCYA1HK-223	CAPACITOR
	C32	QCYA1HK-223	CAPACITOR
	C33	QCYA1HK-223	CAPACITOR
	C39	QCYA1HK-223	CAPACITOR
	C40	QCYA1HK-223	CAPACITOR
	C41	QCYA1HK-223	CAPACITOR
	C43	QCYA1HK-103	CAPACITOR
	C44	QAT3001-017	TRIMMER CAPACITOR,CH1 S.F
	C45	QCYA1HK-223	CAPACITOR
	C47	QCYA1HK-223	CAPACITOR
	C48	QCYA1HK-223	CAPACITOR
	C49	QCYA1HK-223	CAPACITOR
	C50	QCYA1HK-223	CAPACITOR
	C51	QCTA1CH-470	CAPACITOR
	C52	QAT3001-017	TRIMMER CAPACITOR,CH1 F
	C53	QCYA1HK-223	CAPACITOR

#⚠	REF NO.	PART NO.	PART NAME, DESCRIPTION
	C54	QAT3001-017	TRIMMER CAPACITOR,CH2 F
	C55	QCTA1CH-470	CAPACITOR
	C56	QCYA1HK-223	CAPACITOR
	C57	QCYA1HK-223	CAPACITOR
	C58	QCYA1HK-223	CAPACITOR
	C59	QCYA1HK-223	CAPACITOR
	C60	QAT3001-017	TRIMMER CAPACITOR,CH2 S.F
	C61	QCYA1HK-103	CAPACITOR
	C62	QCYA1HK-223	CAPACITOR
	C63	QCYA1HK-223	CAPACITOR
	C64	QCYA1HK-223	CAPACITOR
	C65	QCYA1HK-223	CAPACITOR
	C66	QER61HM-105	E CAPACITOR
	C67	QER61HM-105	E CAPACITOR
	C68	QCYA1HK-223	CAPACITOR
	C69	QER60JM-476	E CAPACITOR
	C71	QAT3001-017	TRIMMER CAPACITOR,CH2 S.F
	C72	QCYA1HK-223	CAPACITOR
	C74	QCYA1HK-223	CAPACITOR
	C75	QCYA1HK-223	CAPACITOR
	C76	QCYA1HK-223	CAPACITOR
	C77	QCYA1HK-223	CAPACITOR
	C78	QCTA1CH-470	CAPACITOR
	C79	QAT3001-017	TRIMMER CAPACITOR,CH2 F
	C80	QCYA1HK-223	CAPACITOR
	C81	QAT3001-017	TRIMMER CAPACITOR,CH1 F
	C82	QCTA1CH-470	CAPACITOR
	C83	QCYA1HK-223	CAPACITOR
	C84	QCYA1HK-223	CAPACITOR
	C85	QCYA1HK-223	CAPACITOR
	C86	QCYA1HK-223	CAPACITOR
	C87	QCYA1HK-223	CAPACITOR
	C88	QCYA1HK-223	CAPACITOR
	C89	QAT3001-017	TRIMMER CAPACITOR,CH1 S.F
	C90	QCYA1HK-103	CAPACITOR
	C91	QCYA1HK-103	CAPACITOR
	C92	QCYA1HK-223	CAPACITOR
	C93	QCYA1HK-223	CAPACITOR
	C96	QCYA1HK-223	CAPACITOR
	C97	QER60JM-476	E CAPACITOR
	C98	QCYA1HK-223	CAPACITOR
	C99	QER60JM-476	E CAPACITOR
	C100	QCYA1HK-223	CAPACITOR
	C101	QER60JM-476	E CAPACITOR
	C102	QCYA1HK-223	CAPACITOR
	L1	PU48530-6R8J	PEAKING COIL
	L2	PU48530-100J	PEAKING COIL
	L3	PU48530-221J	PEAKING COIL
	L4	PU48530-6R8J	PEAKING COIL
	L5	PU48530-100J	PEAKING COIL
	L7	PU48530-101J	PEAKING COIL
	L8	PU48530-2R2K	PEAKING COIL
	L9	PU48530-2R2K	PEAKING COIL
	L11	PU48530-2R2K	PEAKING COIL
	L12	PU48530-2R2K	PEAKING COIL
	L14	PU48530-101J	PEAKING COIL
	L15	PU48530-221J	PEAKING COIL
	L16	PU48530-221J	PEAKING COIL
	L17	PU48530-221J	PEAKING COIL
	L18	PU48530-221J	PEAKING COIL
	RY1	PU56431	RELAY
	RY2	PU56431	RELAY
	RY3	PU56431	RELAY
	BKT1	PRD40520	BRACKET(R)
	BKT2	PRD40521	BRACKET(L)

#⚠	REF NO.	PART NO.	PART NAME, DESCRIPTION
	SCW1	DPSP3006Z	SCREW, X4
	SLD1	PGD30377-01-02	SHIELD CASE(B)
	SLD2	PGD30379-01-01	SHIELD CASE(D)
	SLD3	PGD40902B-02	SHIELD CASE ASS
	SLD4	PGD30378-01-02	SHIELD CASE(C)
	TP1	PU54983	TEST PIN, X17
	CN1	PU58844-4	CAP HOUSING
	CN2	PU58844-12	CAP HOUSING
	CN3	PU58844-5	CAP HOUSING
	CN4	PU56258-8	CAP HOUSING
		**********	
		**********	
		* 18. FULL ERASE HEAD BOARD <06> *	
		**********	
	PWB	PU53259-1-2	FULL ERASE HEAD BOARD
	IC1	3VT01	IC
		OR HMC-230	IC
	C1	QFP42AG-363	P CAPACITOR
		**********	
		**********	
		* 19. FM AUDIO BOARD ASSEMBLY <07> *	
		**********	
	PWBA	PGE10069B-03	FM AUDIO PWB ASSY
		-FM AUDIO SECTION-	
	IC1	NJM2068MD	IC
	IC2	NJM2068MD	IC
	IC3	AN6298NS	IC
	IC4	AN6298NS	IC
	IC5	AN3922NS	IC
	IC6	AN3922NS	IC
⚠	IC7	TA78L009AP	IC
⚠	IC8	NJM78L05D	IC
⚠	IC9	NJM78L05D	IC
	IC12	TC4S71F	IC
	IC13	TC4S71F	IC
	Q4	2SD973R	TRANSISTOR
	Q5	2SC1740S(S)	TRANSISTOR
	Q6	2SA1309S	TRANSISTOR
	Q8	2SC1740S(S)	TRANSISTOR
	Q9	2SC1740S(S)	TRANSISTOR
	Q10	2SC1740S(S)	TRANSISTOR
	Q11	2SA1309S	TRANSISTOR
	Q12	2SC3311A(RS)	TRANSISTOR
	Q13	2SD973AR	TRANSISTOR
	Q14	2SD973AR	TRANSISTOR
	Q15	DTA124ES	TRANSISTOR
	Q16	DTA143ES	TRANSISTOR
	Q17	2SC1740S(QRS)	TRANSISTOR
	Q20	2SB643R,S	TRANSISTOR
	Q21	2SD638R,S	TRANSISTOR
	Q22	2SC3311A(RS)	TRANSISTOR
	Q23	DTC124ES	TRANSISTOR

#⚠	REF NO.	PART NO.	PART NAME, DESCRIPTION
	Q26	2SD973AR	TRANSISTOR
	Q28	DTA124ES	TRANSISTOR
	Q29	DTA124ES	TRANSISTOR
	Q30	DTA124ES	TRANSISTOR
	Q31	DTC124ES	TRANSISTOR
	Q32	2SA1309S	TRANSISTOR
	Q33	2SC3311A(RS)	TRANSISTOR
	Q34	2SA1309S	TRANSISTOR
	Q35	2SC1740S(S)	TRANSISTOR
	Q40	DTA124ES	TRANSISTOR
	Q41	2SA1309S	TRANSISTOR
	Q42	2SA1309S	TRANSISTOR
	Q43	DTC144EK	TRANSISTOR
	Q44	2SB793AR	TRANSISTOR
	Q51	DTC114ES	TRANSISTOR
	D1	DA204K	DIODE
	D3	1SS133	DIODE
	D4	1SS133	DIODE
	D5	1SS133	DIODE
	D8	1SS133	DIODE
	D9	1SS133	DIODE
	D14	1SS133	DIODE
	D15	1SS133	DIODE
	D16	1SS133	DIODE
	D17	1SS133	DIODE
	D18	1SS133	DIODE
	D19	DA204K	DIODE
	D20	1SS133	DIODE
	D21	1SS133	DIODE
	D23	1SS133	DIODE
	D24	DAN202K	DIODE
	R9	QVZ3513-332	V RESISTOR,L CH PB LEVEL
	R10	QRV143F-4700	CMF RESISTOR
	R11	QRV143F-6201	CMF RESISTOR
	R12	QRV143F-1201	CMF RESITOR
	R13	QRSA08J-472YN	RESISTOR
	R14	QRV143F-2401	CMF RESITOR
	R15	QRV143F-6810	CMF RESISTOR
	R16	QRV143F-5601	CMF RESISTOR
	R17	QRV143F-1802	CMF RESISTOR
	R23	QRSA08J-682YN	RESISTOR
	R24	QRSA08J-473YN	RESISTOR
	R25	QRSA08J-271YN	RESISTOR
	R26	QRSA08J-272YN	RESISTOR
	R27	QRSA08J-152YN	RESISTOR
	R28	QRSA08J-221YN	RESISTOR
	R29	QVZ3513-222	V RESISTOR,L CH CARR ADJ
	R30	QRV143F-3901	CMF RESISTOR
	R31	QRSA08J-102YN	RESISTOR
	R32	QVZ3513-332	V RESISTOR,L CH REC LEVEL
	R34	QRSA08J-223YN	RESISTOR
	R35	QRSA08J-223YN	RESISTOR
	R36	QRSA08J-223YN	RESISTOR
	R37	QRSA08J-223YN	RESISTOR
	R38	QRSA08J-102YN	RESISTOR
	R39	QRSA08J-332YN	RESISTOR
	R40	QRSA08J-332YN	RESISTOR
	R41	QRSA08J-102YN	RESISTOR
	R42	QRSA08J-223YN	RESISTOR
	R43	QRSA08J-223YN	RESISTOR
	R44	QRSA08J-102YN	RESISTOR
	R45	QRSA08J-152YN	RESISTOR
	R46	QRSA08J-332YN	RESISTOR

FM AUDIO

#⚠	REF NO.	PART NO.	PART NAME, DESCRIPTION
	R47	QRSA08J-332YN	RESISTOR
	R48	QRSA08J-152YN	RESISTOR
	R49	QRSA08J-472YN	RESISTOR
	R50	QRSA08J-100YN	RESISTOR
	R51	QRSA08J-100YN	RESISTOR
	R56	QRSA08J-102YN	RESISTOR
	R57	QRSA08J-683YN	RESISTOR
	R58	QRSA08J-683YN	RESISTOR
	R59	QRSA08J-561YN	RESISTOR
	R60	QRSA08J-561YN	RESISTOR
	R61	QRSA08J-102YN	RESISTOR
	R62	QRSA08J-473YN	RESISTOR
	R63	QRSA08J-103YN	RESISTOR
	R64	QRSA08J-473YN	RESISTOR
	R65	QRSA08J-473YN	RESISTOR
	R66	QRSA08J-473YN	RESISTOR
	R67	QRSA08J-473YN	RESISTOR
	R68	QRSA08J-103YN	RESISTOR
	R69	QRSA08J-473YN	RESISTOR
	R73	QVZ3513-332	V RESISTOR,R CH REC LEVEL
	R74	QRSA08J-102YN	RESISTOR
	R75	QRSA08J-123YN	RESISTOR
	R76	QRSA08J-473YN	RESISTOR
	R77	QRSA08J-473YN	RESISTOR
	R78	QRSA08J-473YN	RESISTOR
	R79	QVZ3513-222	V RESISTOR,R CH CARR ADJ
	R80	QRV143F-2701	RESISTOR
	R81	QRSA08J-101YN	RESISTOR
	R83	QRSA08J-183YN	RESISTOR
	R84	QRSA08J-682YN	RESISTOR
	R85	QRSA08J-682YN	RESISTOR
	R86	QRSA08J-473YN	RESISTOR
	R87	QRSA08J-271YN	RESISTOR
	R88	QRSA08J-272YN	RESISTOR
	R89	QRSA08J-152YN	RESISTOR
	R90	QRSA08J-221YN	RESISTOR
	R91	QRSA08J-222YN	RESISTOR
	R92	QRSA08J-102YN	RESISTOR
	R93	QRSA08J-682YN	RESISTOR
	R94	QRSA08J-152YN	RESISTOR
	R95	QVZ3513-472	V RESISTOR,L CH DEV ADJ
	R96	QRV143F-1101	CMF RESISTOR
	R97	QRV143F-1002	CMF RESISTOR
	R98	QRV143F-9101	CMF RESISTOR
	R99	QRSA08J-332YN	RESISTOR
	R100	QRV143F-1602	CMF RESISTOR
	R101	QRSA08J-562YN	RESISTOR
	R102	QRSA08J-472YN	RESISTOR
	R103	QRV143F-5601	CMF RESISTOR
	R104	QRV143F-1802	CMF RESISTOR
	R105	QRV143F-2401	CMF RESISTOR
	R106	QRV143F-6810	CMF RESISTOR
	R107	QRV143F-1201	CMF RESISTOR
	R108	QRV143F-6201	CMF RESISTOR
	R109	QRSA08J-472YN	RESISTOR
	R111	QRSA08J-102YN	RESISTOR
	R112	QRSA08J-561YN	RESISTOR
	R113	QRSA08J-561YN	RESISTOR
	R114	QRSA08J-473YN	RESISTOR
	R115	QRSA08J-473YN	RESISTOR
	R117	QRSA08J-103YN	RESISTOR
	R118	QRSA08J-123YN	RESISTOR
	R119	QRSA08J-473YN	RESISTOR
	R120	QRSA08J-473YN	RESISTOR
	R121	QRSA08J-123YN	RESISTOR
	R122	QRSA08J-103YN	RESISTOR

#⚠	REF NO.	PART NO.	PART NAME, DESCRIPTION
	R123	QRSA08J-102YN	RESISTOR
	R124	QRSA08J-104YN	RESISTOR
	R125	QRSA08J-153YN	RESISTOR
	R127	QRSA08J-563YN	RESISTOR
	R130	QRSA08J-561YN	RESISTOR
	R131	QRSA08J-561YN	RESISTOR
	R132	QVZ3513-332	V RESISTOR,R CH PB LEVEL
	R139	QRSA08J-104YN	RESISTOR
	R140	QRSA08J-103YN	RESISTOR
	R145	QRSA08J-562YN	RESISTOR
	R146	QRSA08J-223YN	RESISTOR
	R147	QRV143F-1002	CMF RESISTOR
	R148	QRV143F-1101	CMF RESISTOR
	R149	QRV143F-9101	CMF RESISTOR
	R150	QRV143F-1602	CMF RESISTOR
	R151	QRSA08J-332YN	RESISTOR
	R152	QRSA08J-223YN	RESISTOR
	R153	QVZ3513-472	V RESISTOR,R CH DEV ADJ
	R154	QRSA08J-152YN	RESISTOR
	R155	QRSA08J-682YN	RESISTOR
	R156	QRSA08J-182YN	RESISTOR
	R157	QRSA08J-222YN	RESISTOR
	R158	QRSA08J-102YN	RESISTOR
	R159	QRSA08J-682YN	RESISTOR
	R160	QRSA08J-102YN	RESISTOR
	R161	QRSA08J-682YN	RESISTOR
	R162	QRSA08J-183YN	RESISTOR
	R163	QRSA08J-101YN	RESISTOR
	R164	QRSA08J-473YN	RESISTOR
	R165	QRSA08J-123YN	RESISTOR
	R167	QRSA08J-473YN	RESISTOR
	R168	QRSA08J-473YN	RESISTOR
	R176	QRSA08J-102YN	RESISTOR
⚠	R177	PU52108-1R0	POSISTOR
⚠	R178	PU52108-1R0	POSISTOR
⚠	R179	PU52108-1R0	POSISTOR
	R180	QRSA08J-103YN	RESISTOR
	R181	QRSA08J-223YN	RESISTOR
	R182	QRSA08J-102YN	RESISTOR
	R183	QRV143F-4700	CMF RESISTOR
	R186	QRSA08J-104YN	RESISTOR
	R190	QRSA08J-683YN	RESISTOR
	R191	QRSA08J-683YN	RESISTOR
	R192	QRSA08J-181YN	RESISTOR
	R193	QRSA08J-181YN	RESISTOR
	R194	QRSA08J-104YN	RESISTOR
	R195	QRSA08J-104YN	RESISTOR
	R196	QRSA08J-181YN	RESISTOR
	R197	QRSA08J-181YN	RESISTOR
	R198	QRSA08J-103YN	RESISTOR
	R199	QRSA08J-822YN	RESISTOR
	R200	QRSA08J-822YN	RESISTOR
	R201	QRSA08J-0R0Y	RESISTOR(R201-242), X41
	R250	QRSA08J-0R0Y	RESISTOR, X5
	R272	QRSA08J-152YN	RESISTOR
	R273	QRSA08J-473YN	RESISTOR
	R274	QRSA08J-223YN	RESISTOR
	C7	QCYA1HK-103	CAPACITOR
	C8	QETC1CM-107	E CAPACITOR
	C9	QEPA1CM-226	NP E CAPACITOR
	C10	QFP42AF-102	PP CAPACITOR
	C11	QFP42AF-102	PP CAPACITOR

#⚠	REF NO.	PART NO.	PART NAME, DESCRIPTION
	C12	QFP42AF-222	PP CAPACITOR
	C13	QFP42AF-103M	PP CAPACITOR
	C14	QFP42AF-103M	PP CAPASITOR
	C15	QEPA1CM-106	NP E CAPACITOR
	C16	QEPA0JM-476	NP E CAPACITOR
	C19	QCTA1CH-101	CAPACITOR
	C20	QCYA1HK-103	CAPACITOR
	C21	QCTA1CH-820	CAPACITOR
	C22	QCYA1HK-103	CAPACITOR
	C23	QCTA1CH-680	CAPACITOR
	C24	QCTA1CH-680	CAPACITOR
	C25	QCYA1HK-103	CAPACITOR
	C26	QCYA1HK-103	CAPACITOR
	C27	QCYA1HK-103	CAPACITOR
	C28	QCYA1HK-103	CAPACITOR
	C29	QCYA1HK-103	CAPACITOR
	C30	QCYA1HK-103	CAPACITOR
	C31	QCYA1HK-103	CAPACITOR
	C32	QETC1EM-107	E CAPACITOR
	C33	QCYA1HK-103	CAPACITOR
	C34	QETC1CM-106	E CAPACITOR
	C39	QCYA1HK-222	CAPACITOR
	C40	QEZ0116-226	E CAPACITOR
	C41	QEZ0116-226	E CAPACITOR
	C42	QCTA1CH-8R0	CAPACITOR
	C43	QCTA1CH-8R0	CAPACITOR
	C44	QETC1CM-226	E CAPACITOR
	C45	QETC1CM-226	E CAPACITOR
	C46	QCYA1HK-103	CAPACITOR
	C47	QETC1CM-476	E CAPACITOR
	C48	QEPA1CM-226	NP E CAPACITOR
	C49	QEPA1CM-226	NP E CAPACITOR
	C54	QETA1HM-104	E CAPACITOR
	C55	QCYA1HK-103	CAPACITOR
	C56	QETA1HM-105	E CAPACITOR
	C57	QCYA1HK-103	CAPACITOR
	C58	QETC0JM-476	E CAPACITOR
	C59	QFN31HJ-272	M CAPACITOR
	C60	QFN41HK-561	M CAPACITOR
	C61	QETC0JM-476	E CAPACITOR
	C62	QCYA1HK-103	CAPACITOR
	C63	QETC1HM-105	E CAPACITOR
	C64	QEZ0117-475	E CAPACITOR
	C65	QCYA1HK-103	CAPACITOR
	C66	QFN31HJ-222	M CAPACITOR
	C68	QFN41HK-561	M CAPACITOR
	C69	QEZ0116-106	E CAPACITOR
	C72	QCTA1CH-470	CAPACITOR
	C73	QCTA1CH-470	CAPACITOR
	C74	QCYA1HK-103	CAPACITOR
	C75	QCTA1CH-820	CAPACITOR
	C76	QCYA1HK-103	CAPACITOR
	C77	QCTA1CH-101	CAPACITOR
	C78	QETC0JM-476	E CAPACITOR
	C79	QFN41HK-561	M CAPACITOR
	C80	QFN31HJ-272	M CAPACITOR
	C81	QEZ0117-475	E CAPACITOR
	C82	QCYA1HK-103	CAPACITOR
	C83	QETC0JM-476	E CAPACITOR
	C84	QETC1HM-105	E CAPACITOR
	C85	QETC1HM-105	E CAPACITOR
	C86	QFN31HJ-222	M CAPACITOR
	C87	QFN41HK-561	M CAPACITOR
	C88	QEZ0116-106	E CAPACITOR
	C90	QETC1CM-476	E CAPACITOR
	C91	QCYA1HK-103	CAPACITOR

#⚠	REF NO.	PART NO.	PART NAME, DESCRIPTION
	C92	QETC1EM-476	E CAPACITOR
	C93	QCYA1HK-103	CAPACITOR
	C94	QEZ0116-106	E CAPACITOR
	C95	QEB61EM-475	LL CAPACITOR
	C96	QEZ0116-476	E CAPACITOR
	C97	QFP32AJ-223M	P CAPACITOR
	C98	QFP42AF-102	P CAPACITOR
	C99	QFP42AF-222	PP CAPACITOR
	C100	QEZ0117-475	E CAPACITOR
	C101	QETA1CM-476	E CAPACITOR
	C102	QETC1CM-476	E CAPACITOR
	C103	QEZ0116-106	E CAPACITOR
	C105	QETC1EM-476	E CAPACITOR
	C113	QETC1HM-105	E CAPACITOR
	C114	QEZ0116-106	E CAPACITOR
	C115	QEZ0116-476	E CAPACITOR
	C116	QFP32AJ-223M	P CAPACITOR
	C117	QETA1CM-477	E CAPACITOR
	C118	QETA1CM-476	E CAPACITOR
	C119	QCYA1HK-103	CAPACITOR
	C120	QETC1CM-476	E CAPACITOR
	C121	QCYA1HK-103	CAPACITOR
	C122	QCYA1HK-103	CAPACITOR
	C123	QETC0JM-476	E CAPACITOR
	C124	QEB61EM-475	LL CAPACITOR
	C125	QFP42AF-222	PP CAPACITOR
	C126	QFP42AF-102	PP CAPACITOR
	C127	QFP42AF-222	PP CAPACITOR
	C128	QETC1CM-476	E CAPACITOR
	C129	QETC1CM-476	E CAPACITOR
	C130	QEZ0116-106	E CAPACITOR
	C132	QCTA1CH-100	CAPACITOR
	C133	QETC1CM-106	E CAPACITOR
	C134	QEZ0116-476	E CAPACITOR
	C135	QEPA1CM-226	NP E CAPACITOR
	C136	QEPA1CM-226	NP E CAPACITOR
	C137	QCTA1CH-100	CAPACITOR
	C138	QCYA1HK-103	CAPACITOR
	C139	QETC1CM-476	E CAPACITOR
	C140	QETC1CM-106	E CAPACITOR
	C142	QFN31HJ-222	M CAPACITOR
	C143	QEZ0117-475	E CAPACITOR
	C146	QEPA0JM-476	NP E CAPACITOR
	C147	QEPA1CM-106	NP E CAPACITOR
	C148	QFP42AF-103M	PP CAPACITOR
	C149	QFP42AF-103M	PP CAPACITOR
	C150	QFP42AF-102	PP CAPACITOR
	C151	QFP42AF-222	PP CAPACITOR
	C152	QEPA1CM-226	NP E CAPACITOR
	C153	QFP42AF-102	PP CAPACITOR
	C154	QCYA1HK-103	CAPACITOR
	C155	QETC1CM-107	E CAPACITOR
	C156	QCYA1HK-103	CAPACITOR
	C158	QETC1CM-476	E CAPACITOR
	C159	QETC1CM-476	E CAPACITOR
	C160	QETC1CM-106	E CAPACITOR
	C161	QEZ0116-106	E CAPACITOR
	C162	QEZ0116-106	E CAPACITOR
	C163	QETC1CM-107	E CAPACITOR
	C164	QCFA1EZ-104	CAPACITOR
	C165	QCFA1EZ-104	CAPACITOR
	L1	PU48530-271J	PEAKING COIL
	L2	PU48530-271J	PEAKING COIL
	L3	PU48530-271J	PEAKING COIL
	L4	PU48530-271J	PEAKING COIL
	L5	PU48530-271J	PEAKING COIL

FM AUDIO

#⚠	REF NO.	PART NO.	PART NAME, DESCRIPTION
	L6	PU48530-271J	PEAKING COIL
	L8	PU48530-121J	PEAKING COIL
	L9	PU48530-101J	PEAKING COIL
	L10	PU48530-271J	PEAKING COIL
	L12	PU48530-271J	PEAKING COIL
	TP1	PU56008	TEST-PIN, X3(TP1,2,4)
	CN1	PU58844-2Y	CAP HOUSING
	CN2	PU58844-10	CAP HOUSING
	CN3	PU58844-4	CAP HOUSING
	CN5	PGZ00421-64	MALE CONNECTOR
		-BIAS ERASE SECTION-	
	Q311	2SD973AR	TRANSISTOR
	Q312	2SD973AR	TRANSISTOR
	Q321	DTC124ES	TRANSISTOR
	Q322	DTC124ES	TRANSISTOR
	Q401	2SD1423(RS)	TRANSISTOR
	Q402	2SD1423(RS)	TRANSISTOR
	Q403	2SD637R,S	TRANSISTOR
	Q405	2SC1846(R)	TRANSISTOR
	Q406	2SC1846(R)	TRANSISTOR
	Q407	2SC1846(R)	TRANSISTOR
	Q408	2SC1846(R)	TRANSISTOR
	Q409	2SD1423(RS)	TRANSISTOR
	Q410	2SD1423(RS)	TRANSISTOR
	Q411	2SD973AR	TRANSISTOR
	Q412	2SD973AR	TRANSISTOR
	Q413	2SD973AR	TRANSISTOR
	Q414	2SD973AR	TRANSISTOR
	Q415	2SD1423(RS)	TRANSISTOR
	Q416	2SD1423(RS)	TRANSISTOR
	Q417	2SC2878A,B	TRANSISTOR
	Q418	2SC2878A,B	TRANSISTOR
	Q419	2SC2878A,B	TRANSISTOR
	Q420	2SC2878A,B	TRANSISTOR
	R303	QRSA08J-102YN	RESISTOR
	R304	QRSA08J-102YN	RESISTOR
	R305	QRSA08J-102YN	RESISTOR
	R306	QRD161J-102	RESISTOR
	R307	QVZ3514-332	V R,CH1 VHS BIAS LEVEL
	R308	QVZ3514-332	V R,CH2 VHS BIAS LEVEL
	R309	QRSA08J-104YN	RESISTOR
	R310	QRSA08J-104YN	RESISTOR
	R401	QRSA08J-124YN	RESISTOR
	R402	QRSA08J-124YN	RESISTOR
	R403	QRSA08J-473YN	RESISTOR
	R404	QRSA08J-473YN	RESISTOR
	R405	QRSA08J-102YN	RESISTOR
	R406	QRSA08J-102YN	RESISTOR
	R407	QRSA08J-102YN	RESISTOR
	R408	QRSA08J-102YN	RESISTOR
	R409	QRSA08J-182YN	RESISTOR
	R410	QRSA08J-273YN	RESISTOR
	R411	QRSA08J-123YN	RESISTOR
	R412	QRSA08J-222YN	RESISTOR
	R413	QRSA08J-333YN	RESISTOR
	R414	QRSA08J-333YN	RESISTOR
	R415	QRSA08J-153YN	RESISTOR
	R416	QRSA08J-153YN	RESISTOR
	R417	QRSA08J-122YN	RESISTOR
	R418	QRSA08J-122YN	RESISTOR
	R419	QRD161J-122	RESISTOR
	R420	QRSA08J-122YN	RESISTOR

#⚠	REF NO.	PART NO.	PART NAME, DESCRIPTION
	R421	QRSA08J-182YN	RESISTOR
	R422	QRSA08J-182YN	RESISTOR
	R423	QRSA08J-562YN	RESISTOR
	R424	QRSA08J-562YN	RESISTOR
	R425	QRSA08J-562YN	RESISTOR
	R426	QRSA08J-562YN	RESISTOR
	R427	QRZ0054-180	RESISTOR
	R428	QRZ0054-180	RESISTOR
	R429	QRD161J-470	RESISTOR
	R430	QRSA08J-470YN	RESISTOR
	R431	QRD161J-271	RESISTOR
	R432	QRD161J-271	RESISTOR
	R433	QRSA08J-153YN	RESISTOR
	R434	QRSA08J-153YN	RESISTOR
	R435	QRSA08J-822YN	RESISTOR
	R436	QRSA08J-822YN	RESISTOR
	R437	QRSA08J-822YN	RESISTOR
	R438	QRSA08J-822YN	RESISTOR
	R439	QRSA08J-562YN	RESISTOR
	R440	QRSA08J-562YN	RESISTOR
	R441	QRSA08J-562YN	RESISTOR
	R442	QRSA08J-562YN	RESISTOR
	R443	QRD167J-391	RESISTOR
	R444	QRD167J-391	RESISTOR
	R445	QRZ0054-470	FUSIBLE RESISTOR
	R446	QRZ0054-470	FUSIBLE RESISTOR
	R447	QRSA08J-221YN	RESISTOR
	R448	QRSA08J-221YN	RESISTOR
	R449	QRSA08J-122YN	RESISTOR
	R450	QRSA08J-122YN	RESISTOR
	R451	QVZ3514-473	V R,CH1 S-VHS BIAS LEVEL
	R452	QVZ3514-473	V R,CH2 S-VHS BIAS LEVEL
	R455	QRSA08J-2R2YN	RESISTOR
	R456	QRSA08J-2R2YN	RESISTOR
	R461	QRSA08J-222YN	RESISTOR
	R462	QRSA08J-222YN	RESISTOR
	R463	QRSA08J-222YN	RESISTOR
	R464	QRSA08J-222YN	RESISTOR
	R465	QRSA08J-2R2YN	RESISTOR
	R466	QRSA08J-2R2YN	RESISTOR
	R467	QRSA08J-681YN	RESISTOR
	R468	QRSA08J-681YN	RESISTOR
	R500	QRSA08J-0R0Y	RESISTOR
	R502	QRSA08J-0R0Y	RESISTOR
	C303	QETC1CM-476	E CAPACITOR
	C304	QETC1CM-476	E CAPACITOR
	C305	QCYA1HK-103	CAPACITOR
	C306	QCVB1CM-103	CAPACITOR
	C307	QETC1CM-476	E CAPACITOR
	C308	QETC1CM-476	E CAPACITOR
	C309	QCYA1HK-103	CAPACITOR
	C310	QCVB1CM-103	CAPACITOR
	C311	QCVB1CM-103	CAPACITOR
	C312	QCVB1CM-103	CAPACITOR
	C313	QETC1CM-476	E CAPACITOR
	C314	QETC1CM-476	E CAPACITOR
	C402	QETC1CM-476	E CAPACITOR
	C404	QCVB1CM-103	CAPACITOR
	C405	QFP32AJ-222	PP CAPACITOR
	C406	QFP32AJ-392	PP CAPACITOR
	C407	QETC1CM-227	E CAPACITOR
	C409	QFN31HJ-102	M CAPACITOR
	C410	QFN31HJ-102	M CAPACITOR
	C411	QFN31HJ-682	M CAPACITOR
	C412	QFN31HJ-682	M CAPACITOR

#⚠	REF NO.	PART NO.	PART NAME, DESCRIPTION
	C413	QFN31HJ-682	M CAPACITOR
	C414	QFN31HJ-682	M CAPACITOR
	C417	QFP32AJ-223	PP CAPACITOR
	C418	QFP32AJ-223	PP CAPACITOR
	C421	QETC0JM-107	E CAPACITOR
	C422	QETC0JM-107	E CAPACITOR
	C425	QFN31HJ-682	M CAPACITOR
	C426	QFN31HJ-682	M CAPACITOR
	C427	QFN31HJ-682	M CAPACITOR
	C428	QFN31HJ-682	M CAPACITOR
	C431	QCBB1HJ-151	CAPACITOR
	C432	QCBB1HJ-151	CAPACITOR
	C433	QCS32HJ-561	CAPACITOR
	C434	QCS32HJ-561	CAPACITOR
	C435	QETC1CM-476	E CAPACITOR
	C436	QETC1CM-476	E CAPACITOR
	C437	QETC1CM-476	E CAPACITOR
	C438	QETC1CM-476	E CAPACITOR
	C439	QETC1CM-476	E CAPACITOR
	C440	QCVB1CM-103	CAPACITOR
	C441	QETC1CM-476	E CAPACITOR
	C442	QETC1CM-476	E CAPACITOR
	C444	QETC1CM-476	E CAPACITOR
	C445	QCVB1CM-103	CAPACITOR
	C446	QCVB1CM-103	CAPACITOR
	C447	QETC1CM-476	E CAPACITOR
	C453	QFN31HJ-473	M CAPACITOR
	C454	QFN31HJ-473	M CAPACITOR
	C455	QFN31HJ-473	M CAPACITOR
	C456	QFN31HJ-473	M CAPACITOR
	C457	QETC1CM-476	E CAPACITOR
	C458	QETC1CM-476	E CAPACITOR
⚠	L401	PU53607-152	COIL
⚠	L402	PU53607-152	COIL
⚠	L403	PU53607-152	COIL
⚠	L404	PU53607-152	COIL
⚠	L405	PU30771-9	COIL,ERS FRE.ADJ
	TH1	ERT-D2FGL301S	THERMISTOR
	TH2	ERT-D2FGL301S	THERMISTOR
⚠	TH3	ERT-D2FHL102S	THERMISTOR
⚠	TH4	ERT-D2FHL102S	THERMISTOR
	T401	PGZ00804	TRANSFORMER
	T402	PGZ00804	TRANSFORMER
	T403	PGZ00699	TRANSFORMER
	T404	PGZ00699	TRANSFORMER
	SLD1	PRD30259	SHIELD CASE, PARTS SIDE
	SLD2	PRD30260	SHIELD CASE, PARTS SIDE
	TP401	PU54983	TEST PIN, X2(TP401,402)
	CN4	PU58844-4R	CAP HOUSING
	CN401	PU58844-2	CAP HOUSING
	CN403	PU58844-2	CAP HOUSING
	CN404	PU58844-6	CAP HOUSING
	CN408	PU58844-2	CAP HOUSING

****

****
* 20. NORMAL AUDIO BOARD ASSEMBLY <08> *
****

	PWBA	PGE20149D-03	NOR AUDIO PWB ASSY

#⚠	REF NO.	PART NO.	PART NAME, DESCRIPTION
	IC1	AN6394	IC
	IC2	AN6394	IC
	IC3	TA7629P	IC
	IC4	TA7629P	IC
	IC5	MN4094BS	IC
	IC6	DT5C124E	IC
	IC7	DT5C124E	IC
	IC8	DT5A124E	IC
	IC9	DT5C124E	IC
	IC10	DT5C124E	IC
⚠	IC11	TA78L009AP	IC
⚠	IC12	TA78L009AP	IC
	Q5	2SC2412K(RS)	TRANSISTOR
	Q6	2SC2412K(RS)	TRANSISTOR
	Q9	2SC2412K(RS)	TRANSISTOR
	Q13	2SD973AR	TRANSISTOR
	Q14	2SD973AR	TRANSISTOR
	Q15	2SC2412KL(SE)	TRANSISTOR
	Q16	2SC2412KL(SE)	TRANSISTOR
	Q17	2SC2412KL(SE)	TRANSISTOR
	Q18	2SC2412KL(SE)	TRANSISTOR
	Q23	2SD973AR	TRANSISTOR
	Q24	2SD973AR	TRANSISTOR
	Q25	2SD973AR	TRANSISTOR
	Q26	2SD973AR	TRANSISTOR
	Q27	DTA114ES	TRANSISTOR
	Q28	DTA114EK	TRANSISTOR
	Q37	DTA124EK	TRANSISTOR
	Q38	DTA124EK	TRANSISTOR
	Q40	DTA124EK	TRANSISTOR
	Q49	DTA114EK	TRANSISTOR
	Q50	DTA114EK	TRANSISTOR
	Q51	2SB1030R,S	TRANSISTOR
	Q52	2SB1030R,S	TRANSISTOR
	Q54	DTC124EK	TRANSISTOR
	Q55	DTA114EK	TRANSISTOR
	Q56	DTA114EK	TRANSISTOR
	Q58	DTC124EK	TRANSISTOR
	Q61	DTC124ES	TRANSISTOR
	Q62	DTA124ES	TRANSISTOR
	Q63	2SB1030R,S	TRANSISTOR
	Q64	DTA124ES	TRANSISTOR
	Q65	DTC124ES	TRANSISTOR
	Q66	DTC124ES	TRANSISTOR
	Q67	2SD973AR	TRANSISTOR
	Q68	2SD973AR	TRANSISTOR
	Q69	2SD1423(RS)	TRANSISTOR
	Q71	2SC2412KL(SE)	TRANSISTOR
	Q75	2SD973AR	TRANSISTOR
	Q76	2SD973AR	TRANSISTOR
	Q77	2SD1423(RS)	TRANSISTOR
	Q79	DTA124EK	TRANSISTOR
	Q80	DTA124EK	TRANSISTOR
	Q251	DTC124EK	TRANSISTOR
	Q252	DTA124ES	TRANSISTOR
	Q253	2SA1309R,S	TRANSISTOR
	D1	1SS133	DIODE
	D3	1SS133	DIODE
	D4	1SS133	DIODE
	D5	1SS133	DIODE
	D6	1SS133	DIODE
	D7	MA3075(M)	ZENER DIODE

NORMAL AUDIO

#⚠	REF NO.	PART NO.	PART NAME, DESCRIPTION
	D8	MA3075(M)	ZENER DIODE
	D201	1SS133	DIODE
	D253	1SS133	DIODE
	R3	QVZ3514-222	V RESISTOR,CH1 REC LEVEL
	R4	QVZ3514-222	V RESISTOR,CH2 REC LEVEL
	R5	QRD161J-822	RESISTOR
	R6	QRD161J-822	RESISTOR
	R7	QRD161J-562	RESISTOR
	R8	QRD161J-562	RESISTOR
	R9	QRD161J-332	RESISTOR
	R10	QRD161J-332	RESISTOR
	R11	QRD161J-102	RESISTOR
	R12	QRD161J-102	RESISTOR
	R23	QRD161J-393	RESISTOR
	R24	QRD161J-393	RESISTOR
	R25	QRSA08J-821YN	RESISTOR
	R26	QRSA08J-821YN	RESISTOR
	R27	QVZ3514-152	V RESISTOR,CH1 PB EQ ADJ
	R28	QVZ3514-152	V RESISTOR,CH2 PB EQ ADJ
	R29	QRSA08J-102YN	RESISTOR
	R30	QRSA08J-102YN	RESISTOR
	R31	QVZ3514-103	V RESISTOR,CH1 PB LEVEL
	R32	QVZ3514-103	V RESISTOR,CH2 PB LEVEL
	R33	QRSA08J-102YN	RESISTOR
	R34	QRSA08J-102YN	RESISTOR
	R35	QRSA08J-103YN	RESISTOR
	R36	QRSA08J-103YN	RESISTOR
	R39	QRSA08J-332YN	RESISTOR
	R40	QRSA08J-332YN	RESISTOR
	R43	QRSA08J-104YN	RESISTOR
	R44	QRSA08J-104YN	RESISTOR
	R45	QRSA08J-390YN	RESISTOR
	R46	QRSA08J-390YN	RESISTOR
	R47	QRD161J-223	RESISTOR
	R48	QRD161J-223	RESISTOR
	R49	QRSA08J-103YN	RESISTOR
	R50	QRSA08J-103YN	RESISTOR
⚠	R53	QRZ0054-470	FUSIBLE RESISTOR
⚠	R54	QRZ0054-470	FUSIBLE RESISTOR
	R55	QRD161J-183	RESISTOR
	R56	QRD161J-183	RESISTOR
	R57	QRD161J-332	RESISTOR
	R58	QRD161J-332	RESISTOR
	R63	QRSA08J-103YN	RESISTOR
	R71	QRSA08J-563YN	RESISTOR
	R72	QRSA08J-563YN	RESISTOR
	R73	QRSA08J-102YN	RESISTOR
	R74	QRSA08J-102YN	RESISTOR
	R75	QRSA08J-393YN	RESISTOR
	R76	QRSA08J-393YN	RESISTOR
	R77	QRSA08J-222YN	RESISTOR
	R78	QRSA08J-222YN	RESISTOR
	R79	QRSA08J-221YN	RESISTOR
	R80	QRSA08J-221YN	RESISTOR
	R81	QRSA08J-123YN	RESISTOR
	R82	QRSA08J-123YN	RESISTOR
	R83	QRSA08J-222YN	RESISTOR
	R84	QRSA08J-222YN	RESISTOR
	R85	QRSA08J-221YN	RESISTOR
	R86	QRSA08J-221YN	RESISTOR
	R89	QRSA08J-823YN	RESISTOR
	R91	QRSA08J-223YN	RESISTOR

#⚠	REF NO.	PART NO.	PART NAME, DESCRIPTION
	R97	QRSA08J-473YN	RESISTOR
	R98	QRSA08J-473YN	RESISTOR
	R99	QVZ3513-103	V RESISTOR,CH1 CTC
	R100	QVZ3513-103	V RESISTOR,CH2 CTC
	R103	QRD161J-103	RESISTOR
	R105	QRSA08J-472YN	RESISTOR
	R106	QRSA08J-472YN	RESISTOR
	R107	QRSA08J-152YN	RESISTOR
	R108	QRSA08J-152YN	RESISTOR
	R113	QRD161J-154	RESISTOR
	R114	QRD161J-154	RESISTOR
	R115	QRD161J-274	RESISTOR
	R116	QRD161J-274	RESISTOR
	R117	QRV141F-3301AY	RESISTOR
	R118	QRV141F-3301AY	RESISTOR
	R119	QRD161J-104	RESISTOR
	R120	QRD161J-104	RESISTOR
	R121	QRD161J-562	RESISTOR
	R122	QRD161J-562	RESISTOR
	R123	QRD161J-273	RESISTOR
	R124	QRD161J-273	RESISTOR
	R125	QRD161J-473	RESISTOR
	R126	QRD161J-473	RESISTOR
	R127	QRD161J-103	RESISTOR
	R128	QRD161J-103	RESISTOR
	R129	QRD161J-102	RESISTOR
	R130	QRD161J-102	RESISTOR
	R131	QRD161J-181	RESISTOR
	R132	QRD161J-181	RESISTOR
	R133	QRSA08J-103YN	RESISTOR
	R134	QRSA08J-103YN	RESISTOR
	R135	QRSA08J-103YN	RESISTOR
	R136	QRSA08J-103YN	RESISTOR
	R141	QRSA08J-103YN	RESISTOR
	R142	QRSA08J-103YN	RESISTOR
	R151	QRSA08J-222YN	RESISTOR
	R152	QRSA08J-222YN	RESISTOR
	R157	QRD161J-103	RESISTOR
	R158	QRD161J-103	RESISTOR
	R163	QRSA08J-102YN	RESISTOR
	R165	QRD161J-561	RESISTOR
	R166	QRD161J-561	RESISTOR
	R167	QRD161J-561	RESISTOR
	R168	QRD161J-561	RESISTOR
	R177	QRSA08J-391YN	RESISTOR
	R178	QRSA08J-391YN	RESISTOR
	R184	QRD161J-102	RESISTOR
	R186	QRD161J-681	RESISTOR
	R187	QRD161J-103	RESISTOR
	R188	QRD161J-103	RESISTOR
	R189	QRSA08J-103YN	RESISTOR
	R190	QRSA08J-103YN	RESISTOR
	R191	QRSA08J-103YN	RESISTOR
	R192	QRSA08J-103YN	RESISTOR
	R193	QRD161J-102	RESISTOR
	R194	QRD161J-102	RESISTOR
	R195	QRD161J-103	RESISTOR
	R197	QRSA08J-0R0Y	RESISTOR
	R198	QRSA08J-0R0Y	RESISTOR
	R201	QRD161J-102	RESISTOR
	R202	QRD161J-102	RESISTOR
	R203	QRD161J-102	RESISTOR
	R204	QRD161J-224	RESISTOR

#⚠	REF NO.	PART NO.	PART NAME, DESCRIPTION
	R205	QRD161J-224	RESISTOR
	R206	QRD161J-224	RESISTOR
	R207	QRD161J-103	RESISTOR
	R208	QRD161J-102	RESISTOR
	R251	QRSA08J-103YN	RESISTOR
	R265	QRSA08J-105YN	RESISTOR
	R267	QRSA08J-472YN	RESISTOR
	R268	QRSA08J-472YN	RESISTOR
	R269	QRSA08J-152YN	RESISTOR
	R270	QRSA08J-152YN	RESISTOR
	R271	QRSA08J-103YN	RESISTOR
	R275	QRD161J-102	RESISTOR
	R277	QRSA08J-103YN	RESISTOR
	R278	QRSA08J-103YN	RESISTOR
	R301	QRSA08J-0R0Y	RESISTOR, X14
	C1	QETC1CM-336	E CAPACITOR
	C2	QETC1CM-336	E CAPACITOR
	C3	QETC1EM-335	E CAPACITOR
	C4	QETC1EM-335	E CAPACITOR
	C5	QETC1EM-335	E CAPACITOR
	C6	QETC1EM-335	E CAPACITOR
	C7	QEB61CM-106	LL CAPACITOR
	C8	QEB61CM-106	LL CAPACITOR
	C11	QCBB1HJ-101	CAPACITOR
	C12	QCBB1HJ-101	CAPACITOR
	C13	QEB61HM-105	E CAPACITOR
	C14	QEB61HM-105	E CAPACITOR
	C15	QETC1EM-335	E CAPACITOR
	C16	QETC1EM-335	E CAPACITOR
	C17	QETC1CM-106	E CAPACITOR
	C18	QETC1CM-106	E CAPACITOR
	C19	QETC1CM-106	E CAPACITOR
	C20	QETC1CM-106	E CAPACITOR
	C21	QETC0JM-107	E CAPACITOR
	C22	QETC0JM-107	E CAPACITOR
	C23	QFN31HJ-103	M CAPACITOR
	C24	QFN31HJ-103	M CAPACITOR
	C25	QFV41HJ-684	TF CAPACITOR
	C26	QFV41HJ-684	TF CAPACITOR
	C27	QEB61HM-334	LL CAPACITOR
	C28	QEB61HM-334	LL CAPACITOR
	C29	QEB61HM-104	E CAPACITOR
	C30	QEB61HM-104	E CAPACITOR
	C31	QEN61CM-106	NP E CAPACITOR
	C32	QEN61CM-106	NP E CAPACITOR
	C33	QFN31HJ-473	M CAPACITOR
	C34	QFN31HJ-473	M CAPACITOR
	C35	QFN31HJ-472	M CAPACITOR
	C36	QFN31HJ-472	M CAPACITOR
	C37	QFN31HJ-122	M CAPACITOR
	C38	QFN31HJ-122	M CAPACITOR
	C39	QETC1CM-106	E CAPACITOR
	C40	QETC1CM-106	E CAPACITOR
	C41	QFP32AF-472M	PP CAPACITOR
	C42	QFP32AF-472M	PP CAPACITOR
	C43	QEB61CM-106	LL CAPACITOR
	C44	QEB61CM-106	LL CAPACITOR
	C45	QFN31HJ-823	M CAPACITOR
	C46	QFN31HJ-823	M CAPACITOR
	C49	QETC1CM-106	E CAPACITOR
	C50	QETC1CM-106	E CAPACITOR
	C51	QEB61CM-106	LL CAPACITOR
	C52	QEB61CM-106	LL CAPACITOR
	C53	QEB61CM-106	LL CAPACITOR
	C54	QEB61CM-106	LL CAPACITOR
	C59	QETC1CM-106	E CAPACITOR
	C60	QETC1CM-106	E CAPACITOR
	C63	QFN31HJ-333	M CAPACITOR
	C64	QFN31HJ-333	M CAPACITOR
	C65	QEB61CM-106	LL CAPACITOR
	C66	QEB61CM-106	LL CAPACITOR
	C67	QFP32AJ-561	CAPACITOR
	C68	QFP32AJ-561	CAPACITOR
	C69	QETC1CM-337	E CAPACITOR
	C70	QETC1CM-337	E CAPACITOR
	C71	QETC1CM-337	E CAPACITOR
	C72	QETC1CM-337	E CAPACITOR
	C73	QFP32AF-273M	PP CAPACITOR
	C74	QFP32AF-273M	PP CAPACITOR
	C75	QETC1EM-335	E CAPACITOR
	C76	QETC1EM-335	E CAPACITOR
	C77	QFP32AF-562M	PP CAPACITOR
	C78	QFP32AF-562M	PP CAPACITOR
	C79	QEN61CM-106	NP E CAPACITOR
	C80	QEN61CM-106	NP E CAPACITOR
	C81	QFN31HJ-122	M CAPACITOR
	C82	QFN31HJ-122	M CAPACITOR
	C83	QETC1CM-476	E CAPACITOR
	C84	QETC1CM-476	E CAPACITOR
	C85	QEB41HM-105	LL CAPACITOR
	C86	QEB41HM-105	LL CAPACITOR
	C89	QETA1CM-476	E CAPACITOR
	C90	QETA1CM-476	E CAPACITOR
	C91	QCBB1HJ-681	CAPACITOR
	C92	QCBB1HJ-681	CAPACITOR
	C95	QFN41HJ-103	M CAPACITOR
	C97	QEB41HM-474	E CAPACITOR
	C99	QFN31HJ-182	M CAPACITOR
	C101	QFN31HJ-102	M CAPACITOR
	C103	QETA1CM-226	E CAPACITOR
	C104	QETA1CM-226	E CAPACITOR
	C105	QETA1CM-226	E CAPACITOR
	C106	QETA1CM-226	E CAPACITOR
	C109	QETA1AM-108	E CAPACITOR
	C110	QETA1AM-108	E CAPACITOR
	C111	QEB61CM-106	LL CAPACITOR
	C112	QEB61CM-106	LL CAPACITOR
	C119	QETC1EM-227	E CAPACITOR
	C120	QETC1EM-227	E CAPACITOR
	C125	QETC1CM-337	E CAPACITOR
	C126	QETC1CM-337	E CAPACITOR
	C127	QETC1CM-337	E CAPACITOR
	C128	QETC1CM-337	E CAPACITOR
	C201	QETC1CM-336	E CAPACITOR
	C202	QCVB1CM-103	CAPACITOR
	C203	QETC1CM-476	E CAPACITOR
	C204	QETC1CM-476	E CAPACITOR
	C205	QCVB1CM-103	CAPACITOR
	C206	QCTA1CH-121	CAPACITOR
	C207	QCTA1CH-121	CAPACITOR
	C208	QCTA1CH-121	CAPACITOR
	C251	QETC1CM-476	E CAPACITOR
	C252	QETC0JM-477	E CAPACITOR
	C261	QETA1CM-476	E CAPACITOR
	C265	QETA1HM-104	E CAPACITOR
	C269	QCS11HJ-680	CAPACITOR
	C270	QCS11HJ-680	CAPACITOR

NORMAL AUDIO

#⚠	REF NO.	PART NO.	PART NAME, DESCRIPTION
	C271	QCFA1EZ-104	CAPACITOR
	C272	QCFA1EZ-104	CAPACITOR
	L5	PGZ00121-472	PEAKING COIL
	L6	PGZ00121-472	PEAKING COIL
	L7	PGZ00917-822	COIL
	L8	PGZ00917-822	COIL
	L201	PU48530-471J	PEAKING COIL
	LPF1	PGZ01056	LOW PASS FILTER
	LPF2	PGZ01056	LOW PASS FILTER
	RY1	PGZ00430	RELAY
	TP1	PU54983	TEST PIN, X6(TP1-6)
	CN1	PU58844-2	CAP HOUSING
	CN2	PU58844-2R	CAP HOUSING
	CN3	PU58844-3	CAP HOUSING
	CN4	PU58844-3Y	CAP HOUSING
	CN10	PGZ00421-100	MALE CONNECTOR
		-AUDIO TIMING MODULE-	
	PWBA	PGE30162A	AUDIO TIMING BOARD ASSEMBLY
	IC1	UPD7564G-526	IC
	IC2	MN4094BS	IC
	IC3	MN4094BS	IC
	D1	IMN10	DIODE
	R1	QRSA08J-473YN	RESISTOR
	R2	QRSA08J-473YN	RESISTOR
	R3	QRSA08J-473YN	RESISTOR
	R4	QRSA08J-473YN	RESISTOR
	R5	QRSA08J-102YN	RESISTOR
	R6	QRSA08J-102YN	RESISTOR
	R7	QRSA08J-102YN	RESISTOR
	R8	QRSA08J-102YN	RESISTOR
	R9	QRSA08J-473YN	RESISTOR
	R12	QRSA08J-473YN	RESISTOR
	R13	QRSA08J-102YN	RESISTOR
	R14	QRSA08J-102YN	RESISTOR
	R15	QRSA08J-102YN	RESISTOR
	R16	QRSA08J-103YN	RESISTOR
	R17	QRSA08J-103YN	RESISTOR
	R18	QRSA08J-103YN	RESISTOR
	R19	QRSA08J-103YN	RESISTOR
	R20	QRSA08J-103YN	RESISTOR
	R21	QRSA08J-103YN	RESISTOR
	R22	QRSA08J-102YN	RESISTOR
	R23	QRSA08J-102YN	RESISTOR
	R24	QRSA08J-102YN	RESISTOR
	R25	QRSA08J-102YN	RESISTOR
	R26	QRSA08J-102YN	RESISTOR
	R27	QRSA08J-102YN	RESISTOR
	R28	QRSA08J-102YN	RESISTOR
	R29	QRSA08J-102YN	RESISTOR
	R30	QRSA08J-103YN	RESISTOR
	R31	QRSA08J-103YN	RESISTOR
	R32	QRSA08J-102YN	RESISTOR
	R33	QRSA08J-102YN	RESISTOR
	R34	QRSA08J-102YN	RESISTOR
	R35	QRSA08J-102YN	RESISTOR
	R36	QRSA08J-102YN	RESISTOR
	R37	QRSA08J-102YN	RESISTOR
	R38	QRSA08J-102YN	RESISTOR
	R39	QRSA08J-102YN	RESISTOR
	R40	QRSA08J-102YN	RESISTOR
	R41	QRSA08J-102YN	RESISTOR
	R42	QRSA08J-474YN	RESISTOR
	C1	QCTA1CH-101	CAPACITOR
	C2	QCTA1CH-101	CAPACITOR
	C3	QEF80JM-225	TANTAL CAPACITOR
	C4	QCFA1EZ-104	CAPACITOR
	C6	QEF81AM-105	CAPACITOR
⚠	X1	PGZ00825-02	CRYSTAL RESONATOR
	CN1	PGZ01081-10	MICRO HEADER
	CN2	PGZ01081-09	MICRO HEADER
	CN3	PGZ01081-09	MICRO HEADER
		-TIME CODE MODULE-	
	PWBA	PGE30138B	TIME CODE PWB ASSY
	IC1	BA10339F	IC
	IC2	AN360	IC
	Q1	2SC2412KL(E)	TRANSISTOR
	Q2	2SC2412K(RS)	TRANSISTOR
	Q3	2SC2412K(RS)	TRANSISTOR
	Q4	2SC2412KL(E)	TRANSISTOR
	Q5	2SC2412K(RS)	TRANSISTOR
	Q6	2SC2412K(RS)	TRANSISTOR
	Q7	2SC2412K(RS)	TRANSISTOR
	Q8	2SC2412K(RS)	TRANSISTOR
	Q9	DTC124EK	TRANSISTOR
	Q10	DTC124EK	TRANSISTOR
	Q11	DTC124EK	TRANSISTOR
	Q12	DTA124EK	TRANSISTOR
	Q13	DTA124EK	TRANSISTOR
	Q14	DTA124EK	TRANSISTOR
	DA1	DAN202K	DIODE
	DA2	DAN202K	DIODE
	R1	QRSA08J-103YN	RESISTOR
	R2	QRSA08J-564YN	RESISTOR
	R3	QRSA08J-103YN	RESISTOR
	R4	QRSA08J-103YN	RESISTOR
	R5	QRSA08J-223YN	RESISTOR
	R6	QRSA08J-223YN	RESISTOR
	R7	QRSA08J-103YN	RESISTOR
	R8	QRSA08J-332YN	RESISTOR
	R9	QRSA08J-105YN	RESISTOR
	R10	QRSA08J-105YN	RESISTOR
	R11	QRSA08J-104YN	RESISTOR
	R12	QRSA08J-333YN	RESISTOR
	R13	QRSA08J-102YN	RESISTOR
	R14	QRSA08J-474YN	RESISTOR
	R15	QRSA08J-223YN	RESISTOR
	R16	QRSA08J-563YN	RESISTOR
	R17	QRSA08J-332YN	RESISTOR
	R18	QRSA08J-562YN	RESISTOR
	R19	QRSA08J-332YN	RESISTOR
	R20	QRSA08J-202YN	RESISTOR
	R21	QRD167J-821	RESISTOR
	R22	QRSA08J-560YN	RESISTOR
	R23	QRSA08J-103YN	RESISTOR
	R24	QRSA08J-102YN	RESISTOR
	R25	QRSA08J-223YN	RESISTOR
	R26	QRSA08J-223YN	RESISTOR
	R27	QRSA08J-103YN	RESISTOR
	R28	QRSA08J-223YN	RESISTOR
	R29	QRSA08J-822YN	RESISTOR
	R30	QRSA08J-822YN	RESISTOR

#⚠	REF NO.	PART NO.	PART NAME, DESCRIPTION
	R31	QRSA08J-562YN	RESISTOR
	R32	QRSA08J-103YN	RESISTOR
	R33	QRSA08J-562YN	RESISTOR
	R34	QRSA08J-103YN	RESISTOR
	R35	QRSA08J-103YN	RESISTOR
	R36	QRD167J-560	RESISTOR
	R37	QRD167J-121	RESISTOR
	R38	QRSA08J-563YN	RESISTOR
	R39	QRSA08J-472YN	RESISTOR
	R40	QRSA08J-332YN	RESISTOR
	R41	QRSA08J-332YN	RESISTOR
	R42	QRSA08J-822YN	RESISTOR
	R43	QRSA08J-103YN	RESISTOR
	R44	QRD167J-102	RESISTOR
	R45	QRD161J-122	RESISTOR
	C1	QEK41HM-334	E CAPACITOR
	C2	QEK41CM-107	E CAPACITOR
	C3	QCYA1HK-561	CAPACITOR
	C4	QER41EM-475	E CAPACITOR
	C5	QEK41CM-107	E CAPACITOR
	C6	QEPA1HM-105	NP E CAPACITOR
	C7	QEPA1HM-105	NP E CAPACITOR
	C8	QER41CM-336	E CAPACITOR
	C9	QEK41HM-105	E CAPACITOR
	C10	QFN41HJ-822	M CAPACITOR
	C11	QER41HM-105	E CAPACITOR
	C12	QCTA1CH-330	CAPACITOR
	C14	QER41CM-336	E CAPACITOR
	C15	QER41CM-336	E CAPACITOR
	C16	QEK41CM-107	E CAPACITOR
	C17	QEK41CM-107	E CAPACITOR
	L1	PU53607-152	COIL
	L2	PU53607-152	COIL
	CN1	PGZ01081-05	MICRO HEADER
	CN2	PGZ01081-05	MICRO HEADER
	CN3	PGZ01081-10	MICRO HEADER

****

****
* 21. V ERASE/FMA PRE BOARD ASSEMBLY <09> *
****

	PWBA	PGE20152D-07	V.ERAS/FM A.PRE AMP PWB AY
	IC1	UPC1531HA	IC
	IC2	AN3920S	IC
	IC3	BA222	IC
	Q18	2SC1740S(S)	TRANSISTOR
	Q19	2SC1740S(S)	TRANSISTOR
	Q20	2SC1740S(S)	TRANSISTOR
	Q21	2SC1740S(S)	TRANSISTOR
	Q22	2SC1740S(S)	TRANSISTOR
	Q23	2SC1740S(S)	TRANSISTOR
	Q24	DTC124ES	TRANSISTOR
	Q27	DTC124ES	TRANSISTOR
	Q28	DTC124ES	TRANSISTOR
	D5	1SS133	DIODE
	R41	QRD161J-102	RESISTOR
	R42	QRD161J-273	RESISTOR
	R43	QRD161J-273	RESISTOR
	R44	QRD161J-102	RESISTOR

#⚠	REF NO.	PART NO.	PART NAME, DESCRIPTION
	R45	QRD161J-102	RESISTOR
	R46	QRD161J-102	RESISTOR
	R47	QRD161J-102	RESISTOR
	R48	QRD161J-102	RESISTOR
	R49	QRD161J-332	RESISTOR
	R50	QRD161J-273	RESISTOR
	R51	QRD161J-473	RESISTOR
	R52	QRD161J-332	RESISTOR
	R53	QRD161J-271	RESISTOR
	R54	QRD161J-100	RESISTOR
	R55	QRD161J-100	RESISTOR
	R56	QRD161J-471	RESISTOR
	R57	QRD161J-471	RESISTOR
	R58	QRD161J-222	RESISTOR
	R59	QRD161J-393	RESISTOR
	R60	QRD161J-332	RESISTOR
	R61	QRD161J-153	RESISTOR
	R62	QRD161J-393	RESISTOR
	R63	QRD161J-153	RESISTOR
	R64	QRD161J-124	RESISTOR
	R65	QRD161J-273	RESISTOR
	R66	QRD161J-100	RESISTOR
	R67	QRD161J-273	RESISTOR
	R68	QRD161J-473	RESISTOR
	R72	QRD161J-100	RESISTOR
	R75	QRD161J-102	RESISTOR
	R76	QRD161J-153	RESISTOR
	R77	QRD161J-103	RESISTOR
	R78	QRD161J-105	RESISTOR
	R79	QRD161J-103	RESISTOR
	R80	PU57457-473	V RESISTOR,FM PB LEVEL
	R81	PU59499	BUS WIRE
	R82	QRD161J-0R0	RESISTOR
	R83	QRD161J-0R0	RESISTOR
	C20	QCF31HP-103	CAPACITOR
	C21	PU59499	BUS WIRE
	C22	QCF31HP-103	CAPACITOR
	C24	QCF31HP-103	CAPACITOR
	C25	QFN31HJ-682	M CAPACITOR
	C26	QCS31HJ-331	CAPACITOR
	C27	QCS31HJ-221	CAPACITOR
	C28	QCF31HP-103	CAPACITOR
	C29	QCF31HP-103	CAPACITOR
	C30	QCS31HJ-820	CAPACITOR
	C31	QCF31HP-103	CAPACITOR
	C32	QCF31HP-103	CAPACITOR
	C33	QCF31HP-103	CAPACITOR
	C34	QCF31HP-103	CAPACITOR
	C35	QCS31HJ-820	CAPACITOR
	C36	QCF31HP-103	CAPACITOR
	C37	QETCOJM-476	E CAPACITOR
	C38	QCF31HP-103	CAPACITOR
	C39	QETC1HM-105	E CAPACITOR
	C40	QETCOJM-476	E CAPACITOR
	C41	QETC1HM-105	E CAPACITOR
	C42	QCF31HP-103	CAPACITOR
	C43	QCF31HP-103	CAPACITOR
	C44	QETC1HM-225	E CAPACITOR
	C45	QCF31HP-103	CAPACITOR
	C46	QETC1HM-104	E CAPACITOR
	C47	QCF31HP-103	CAPACITOR
	C48	QCF31HP-103	CAPACITOR
	C52	QCF31HP-103	CAPACITOR
	C55	QEE41EM-105	T CAPACITOR
	C56	QCF31HP-102	CAPACITOR

#⚠	REF NO.	PART NO.	PART NAME, DESCRIPTION
	C57	QCS11HJ-5R0	CAPACITOR
	C58	QCF31HP-103	CAPACITOR
	C59	QETCOJM-476	E CAPACITOR
	C60	QCF11HP-223	CAPACITOR
	L5	PU53607-152	COIL
	L6	PU48530-271J	COIL
	L7	PU48530-271J	COIL
	BPF1	PU56177-3	BAND PASS FILTER
	BPF2	PU56177-4	BAND PASS FILTER
	K1	PGZ00354	FERRITE BEADS
	K2	PGZ00354	FERRITE BEADS
	SLD1	PRD30257	SHIELD CASE
	SLD2	PRD42481	EDGE GUARD
	CN3	PU58844-6R	CAP HOUSING
	CN4	PU58844-6	CAP HOUSING
	CN5	PU58844-10	CAP HOUSING
	CN6	PU58844-2	CAP HOUSING
	CN7	PU58844-2Y	CAP HOUSING

****

****
* 22. SERVO-1 BOARD ASSEMBLY <10> *
****

	PWBA	PGE10070D	SERVO-1 PWB ASSY
	IC1	M51490L	IC
	IC2	M51490L	IC
	IC3	MN4071BS	IC
	IC4	MN4069UBS	IC
	IC5	TC4S71F	IC
	IC6	BA6302AF	IC
	IC7	BA10358F	IC
	IC8	BA6302AF	IC
	IC9	MN4051BS	IC
	IC10	BA10358F	IC
	IC11	TC4S11F	IC
	IC12	MN4053BS	IC
	IC13	MN4053BS	IC
	IC14	MN4053BS	IC
	IC15	TC4S01F	IC
	IC16	BA6993F	IC
	IC17	TC4SU69F	IC
	IC18	TC4SU69F	IC
⚠	IC19	M5278L05	IC
	Q1	FMG2	TRANSISTOR
	Q2	DTC144EK	TRANSISTOR
	Q3	FMG2	TRANSISTOR
	Q5	2SD601	TRANSISTOR
	Q6	DTA144EK	TRANSISTOR
	Q7	DTC144EK	TRANSISTOR
	Q8	DTC144EK	TRANSISTOR
	Q9	IMD2	TRANSISTOR
	Q10	2SB709	TRANSISTOR
	Q12	DTC144EK	TRANSISTOR
	Q13	DTC144EK	TRANSISTOR
	Q14	DTC144EK	TRANSISTOR
	Q15	IMD2	TRANSISTOR
	Q16	FMG2	TRANSISTOR
	Q17	2SK621	FE TRANSISTOR
	Q19	2SK208(O)	FE TRANSISTOR
	Q20	FMG2	TRANSISTOR

#⚠	REF NO.	PART NO.	PART NAME, DESCRIPTION
	Q21	DTC144EK	TRANSISTOR
	Q22	FMG2	TRANSISTOR
	Q23	2SD601	TRANSISTOR
	Q24	2SD601	TRANSISTOR
	Q25	2SD601	TRANSISTOR
	Q26	DTC144EK	TRANSISTOR
	Q27	DTA144EK	TRANSISTOR
	Q28	2SB709	TRANSISTOR
	Q29	2SD601	TRANSISTOR
	Q30	DTC144EK	TRANSISTOR
	Q31	2SB709	TRANSISTOR
	Q32	2SB709	TRANSISTOR
	Q33	2SK621	FE TRANSISTOR
	Q34	2SB641P,Q,R,S	TRANSISTOR
	D1	DAN202K	DIODE
	D2	DAN202K	DIODE
	D3	DAN202K	DIODE
	D5	DAN202K	DIODE
	D6	DAN202K	DIODE
	D7	HZ5CLL	ZENER DIODE
	D8	HZ5CLL	ZENER DIODE
	D9	DAN202K	DIODE
	D10	DAN202K	DIODE
	D11	DAP202K	DIODE
	D12	1SS133	DIODE
	D13	1SS133	DIODE
	D14	1SS133	DIODE
	D15	1SS133	DIODE
	DA1	MA157	DIODE
	DA3	DAN202K	DIODE
	DA4	DAN202K	DIODE
	DA5	DAP202K	DIODE
	DA6	DAN202K	DIODE
	DA7	DAN202K	DIODE
	DA8	DAP202K	DIODE
	DA9	DAN202K	DIODE
	DA10	DAP202K	DIODE
	DA11	DAP202K	DIODE
	R1	QRSA08J-152YN	RESISTOR
	R2	QRSA08J-224YN	RESISTOR
	R3	QRSA08J-223YN	RESISTOR
	R4	QRSA08J-390YN	RESISTOR
	R5	QRSA08J-390YN	RESISTOR
	R6	QRSA08J-104YN	RESISTOR
	R7	QRSA08J-222YN	RESISTOR
	R8	QRSA08J-152YN	RESISTOR
	R9	QRSA08J-224YN	RESISTOR
	R10	QRSA08J-223YN	RESISTOR
	R11	QRSA08J-100YN	RESISTOR
	R12	QRD161J-103	RESISTOR
	R13	QRSA08J-472YN	RESISTOR
	R14	QRD161J-221	RESISTOR
	R15	QRSA08J-104YN	RESISTOR
	R16	QRSA08J-104YN	RESISTOR
	R17	QRSA08J-223YN	RESISTOR
	R18	QRSA08J-223YN	RESISTOR
	R19	QRSA08J-223YN	RESISTOR
	R20	QRSA08J-223YN	RESISTOR
	R21	QRSA08J-223YN	RESISTOR
	R22	QRSA08J-223YN	RESISTOR
	R23	QRSA08J-224YN	RESISTOR
	R24	QRSA08J-103YN	RESISTOR
	R25	QRSA08J-103YN	RESISTOR
	R26	QRSA08J-103YN	RESISTOR
	R27	QRSA08J-123YN	RESISTOR
	R28	QRSA08J-102YN	RESISTOR

#⚠	REF NO.	PART NO.	PART NAME, DESCRIPTION
	R29	QRSA08J-102YN	RESISTOR
	R30	QRSA08J-103YN	RESISTOR
	R31	QRSA08J-100YN	RESISTOR
	R32	QRSA08J-100YN	RESISTOR
	R34	QRSA08J-102YN	RESISTOR
	R35	QRSA08J-103YN	RESISTOR
	R36	QRSA08J-102YN	RESISTOR
⚠	R37	ERT-D2FHL103S	THERMISTOR
	R38	QRSA08J-562YN	RESISTOR
	R39	QRSA08J-104YN	RESISTOR
	R40	QRSA08J-103YN	RESISTOR
	R41	QRSA08J-0R0Y	RESISTOR
	R42	QRD161J-153	RESISTOR
	R43	QRD161J-153	RESISTOR
	R62	QRD161J-681	RESISTOR
	R63	QRSA08J-102YN	RESISTOR
	R64	QRSA08J-474YN	RESISTOR
	R65	QRSA08J-102YN	RESISTOR
	R67	QVZ3513-473	V RESISTOR,DRUM DISCRI
	R68	QRSA08J-104YN	RESISTOR
	R69	QRSA08J-472YN	RESISTOR
	R70	QRD161J-103	RESISTOR
	R71	QRV143F-3573	CMF RESISTOR
	R72	QRV143F-3573	CMF RESISTOR
	R73	QRV143F-1783	CMF RESISTOR
	R74	QRSA08J-392YN	RESISTOR
	R75	QRSA08J-103YN	RESISTOR
	R76	QRSA08J-683YN	RESISTOR
	R77	QRSA08J-105YN	RESISTOR
	R78	QRSA08J-103YN	RESISTOR
	R79	QRSA08J-103YN	RESISTOR
	R80	QRSA08J-103YN	RESISTOR
	R81	QRSA08J-104YN	RESISTOR
	R82	QRSA08J-274YN	RESISTOR
	R83	QRD161J-221	RESISTOR
	R84	QRSA08J-103YN	RESISTOR
	R85	QRSA08J-103YN	RESISTOR
	R86	QRSA08J-823YN	RESISTOR
	R87	QRSA08J-123YN	RESISTOR
	R88	QVZ3513-222	V R,CF SERVO OFF SET
	R89	QRSA08J-103YN	RESISTOR
	R90	QVZ3513-473	V RESISTOR,CAP DISCRI
	R91	QVZ3513-224	V RESISTOR,SLOW DISCRI
	R92	QRSA08J-104YN	RESISTOR
	R93	QRSA08J-274YN	RESISTOR
	R94	QRSA08J-273YN	RESISTOR
	R95	QRSA08J-274YN	RESISTOR
	R96	QRSA08J-154YN	RESISTOR
	R97	QRSA08J-683YN	RESISTOR
	R98	QRSA08J-103YN	RESISTOR
	R99	QRSA08J-182YN	RESISTOR
	R101	QRSA08J-562YN	RESISTOR
	R102	QRSA08J-333YN	RESISTOR
	R103	QRSA08J-333YN	RESISTOR
	R104	QVZ3513-153	V RESISTOR,SLOW DC SET
	R105	QRSA08J-683YN	RESISTOR
	R106	QRSA08J-103YN	RESISTOR
	R107	QRSA08J-103YN	RESISTOR
	R108	QRSA08J-103YN	RESISTOR
	R109	QRSA08J-104YN	RESISTOR
	R110	QRSA08J-123YN	RESISTOR
	R111	QRSA08J-124YN	RESISTOR
	R112	QRSA08J-104YN	RESISTOR
	R113	QRD161J-823	RESISTOR
	R114	QRD161J-333	RESISTOR
	R115	QRSA08J-154YN	RESISTOR

#⚠	REF NO.	PART NO.	PART NAME, DESCRIPTION
	R116	QRSA08J-104YN	RESISTOR
	R117	QRSA08J-103YN	RESISTOR
	R118	QRSA08J-103YN	RESISTOR
	R128	QRSA08J-102YN	RESISTOR
	R129	QRD163J-681	RESISTOR
	R131	QRSA08J-103YN	RESISTOR
	R134	QRSA08J-334YN	RESISTOR
	R135	QRSA08J-472YN	RESISTOR
	R136	QRSA08J-104YN	RESISTOR
	R137	QRSA08J-104YN	RESISTOR
	R140	QRSA08J-103YN	RESISTOR
	R141	QRSA08J-103YN	RESISTOR
	R142	QRSA08J-0R0Y	RESISTOR
	R143	QRSA08J-103YN	RESISTOR
	R144	QRSA08J-223YN	RESISTOR
	R145	QRD161J-223	RESISTOR
	R146	QRSA08J-472YN	RESISTOR
	R147	QVZ3513-333	V RESISTOR, X0.9 PRESET
	R148	QRSA08J-472YN	RESISTOR
	R149	QVZ3513-333	V RESISTOR, X1.1 PRESET
	R150	QRSA08J-103YN	RESISTOR
	R151	QRD161J-103	RESISTOR
	R152	QRSA08J-104YN	RESISTOR
	R153	QRD161J-105	RESISTOR
	R154	QRD161J-102	RESISTOR
	R155	QRD161J-333	RESISTOR
	R156	QRD161J-103	RESISTOR
	R201	QRSA08J-0R0Y	RESISTOR(R201-R280), X77
	C1	QETC1CM-476	E CAPACITOR
	C2	QCYA1HK-103	CAPACITOR
	C3	QETC1CM-476	E CAPACITOR
	C4	QCTA1CH-151	CAPACITOR
	C5	QFN31HJ-103	M CAPACITOR
	C6	QFV41HJ-474M	TF CAPACITOR
	C7	QETC1CM-476	E CAPACITOR
	C8	QETC1CM-476	E CAPACITOR
	C9	QCTA1CH-151	CAPACITOR
	C10	QFN31HJ-103	M CAPACITOR
	C11	QFV41HJ-474M	TF CAPACITOR
	C12	QETC0JM-476	E CAPACITOR
⚠	C13	QCTA1CH-270	CAPACITOR
⚠	C14	QCTA1CH-270	CAPACITOR
	C15	QETC0JM-476	E CAPACITOR
	C16	QCYA1HK-103	CAPACITOR
	C17	QCYA1HK-103	CAPACITOR
	C18	QCYA1HK-103	CAPACITOR
	C19	QETC1HM-105	E CAPACITOR
	C21	QFM41HJ-822M	MYLAR CAP
	C22	QFM41HJ-822M	MYLAR CAP
	C23	QFP42AF-183M	PP CAPACITOR
	C24	QFP42AF-183M	PP CAPACITOR
	C25	QER41CM-107	E CAPACITOR
	C26	QCF31HP-102	CAPACITOR
	C27	QETC0JM-476	E CAPACITOR
	C29	QCFA1EZ-104	CAPACITOR
	C30	QETC0JM-226	E CAPACITOR
	C31	QER41CM-226	E CAPACITOR
	C32	QCYA1HK-103	CAPACITOR
	C33	QER41CM-226	E CAPACITOR
	C34	QCYA1HK-103	CAPACITOR
	C35	QER41CM-226	E CAPACITOR
	C36	QCYA1HK-223	CAPACITOR
	C37	QER41EM-335	E CAPACITOR
	C38	QER40JM-476	E CAPACITOR

SERVO-1

#⚠	REF NO.	PART NO.	PART NAME, DESCRIPTION
	C47	QCTA1CH-330	CAPACITOR
	C48	QFN31HJ-122	M CAPACITOR
	C49	QETC0JM-226	E CAPACITOR
	C50	QFN31HJ-104	M CAPACITOR
	C51	QETC0JM-476	E CAPACITOR
	C52	QCYA1HK-103	CAPACITOR
	C53	QFP42AF-123M	PP CAPACITOR
	C55	QFN31HJ-103	M CAPACITOR
	C56	QFP42AF-183M	PP CAPACITOR
	C57	QFP42AF-183M	PP CAPACITOR
	C58	QFP42AF-363M	PP CAPACITOR
	C59	QFN31HJ-823	M CAPACITOR
	C60	QEN61EM-475	NP E CAPACITOR
	C62	QETC1CM-106	E CAPACITOR
	C63	QCTA1CH-470	CAPACITOR
	C64	QCYA1HK-103	CAPACITOR
	C65	QETC1CM-476	E CAPACITOR
	C66	QFP42AF-822M	PP CAPACITOR
	C67	QFP42AF-822M	PP CAPACITOR
	C68	QFN31HJ-103	M CAPACITOR
	C69	QETC1CM-106	E CAPACITOR
	C70	QCYA1HK-273	CAPACITOR
	C72	QCYA1HK-103	CAPACITOR
	C73	QETC0JM-476	E CAPACITOR
	C74	QCF81EZ-224ZL	CAPACITOR
	C77	QETC0JM-476	E CAPACITOR
	C78	QCYA1HK-103	CAPACITOR
	C79	QETC1CM-476	E CAPACITOR
	C81	QETC1HM-225	E CAPACITOR
	C82	QCYA1HK-103	CAPACITOR
	C83	QFN41HJ-104	M CAPACITOR
	L1	PU48530-221J	PEAKING COIL
	L2	PU48530-221J	PEAKING COIL
	L3	PU48530-221J	PEAKING COIL
	L4	PU48530-221J	PEAKING COIL
	L6	PU48530-221J	PEAKING COIL
	L7	PU48530-221J	PEAKING COIL
	L8	PU48530-221J	PEAKING COIL
	L9	PU48530-221J	PEAKING COIL
	L11	PU48530-221J	PEAKING COIL
⚠	CF1	PU56805	CRYSTAL
	TP1	PU54983	TEST PIN, X31
	CN1	PGZ00421-100	MALE CONNECTOR
	CN2	PGZ00757-112	CONNECTOR
	CN3	PGZ00757-112	CONNECTOR
	CN4	PGZ00757-112	CONNECTOR
	CN5	PGZ00803-10	MICRO HEADER
	CN6	PGZ00803-08	SOCKET
	CN7	PGZ00803-05	SOCKET
	CN8	PGZ00803-10	MICRO HEADER
	CN9	PGZ00803-05	SOCKET
		-SYNC SYSTEM MODULE-	
	MOD1	PGE20163A1-01	SYNC SYSTEM MODULE
	IC1	MN4069UBS	IC
	IC2	MN4001BS	IC
	IC3	MN4071BS	IC
	IC4	TC4S81F	IC
	IC5	TC4S01F	IC
	IC6	TC4S01F	IC
	Q2	FMG2	TRANSISTOR
	Q3	FMG2	TRANSISTOR

#⚠	REF NO.	PART NO.	PART NAME, DESCRIPTION
	Q5	DTC144EK	TRANSISTOR
	Q6	IMX1	TRANSISTOR
	R1	QRSA08J-103YN	RESISTOR
	R2	QRSA08J-222YN	RESISTOR
	R3	QRSA08J-222YN	RESISTOR
	R4	QRSA08J-104YN	RESISTOR
	R5	QRSA08J-474YN	RESISTOR
	R6	QRSA08J-224YN	RESISTOR
	R7	QRSA08J-224YN	RESISTOR
	R8	QRSA08J-224YN	RESISTOR
	R9	QRSA08J-224YN	RESISTOR
	R10	QRSA08J-103YN	RESISTOR
	R11	QRSA08J-103YN	RESISTOR
	R12	QRSA08J-103YN	RESISTOR
	R13	QRSA08J-103YN	RESISTOR
	R14	QRSA08J-224YN	RESISTOR
	R15	QRSA08J-472YN	RESISTOR
	R16	QRSA08J-103YN	RESISTOR
	R17	QRSA08J-471YN	RESISTOR
	R18	QRSA08J-103YN	RESISTOR
	R19	QRSA08J-104YN	RESISTOR
	R20	QRSA08J-474YN	RESISTOR
	R21	QRSA08J-472YN	RESISTOR
	R22	QRSA08J-471YN	RESISTOR
	R23	QRSA08J-103YN	RESISTOR
	R24	QRSA08J-223YN	RESISTOR
	R25	QRSA08J-223YN	RESISTOR
	R26	QRSA08J-103YN	RESISTOR
	C1	QCTA1CH-151	CAPACITOR
	C2	QCTA1CH-470	CAPACITOR
	C3	QEF80JM-225	TANTAL CAPACITOR
	C4	QCTA1CH-151	CAPACITOR
	C5	QCTA1CH-470	CAPACITOR
	C6	QEF80JM-225	TANTAL CAPACITOR
	C7	QER40JM-476	E CAPACITOR
	C8	QCYA1HK-103	CAPACITOR
	C9	QCF81CZ-105	CAPACITOR
	C10	QCF81CZ-105	CAPACITOR
	L1	PGZ00637-221	COIL
	CN1	PGZ01081-07	MICRO HEADER
	CN2	PGZ01081-07	MICRO HEADER
		-SERVO LOCK DETECT MODULE-	
	MOD7	PGE20163A2	SERVO LOCK DETECT MODULE
	IC1	BA10339F	IC
	IC2	TC4S81F	IC
	IC3	TC4SU69F	IC
	IC4	TC4SU69F	IC
	Q1	FMG2	TRANSISTOR
	D1	DAN202K	DIODE
	D2	DAN202K	DIODE
	R1	QRSA08J-471YN	RESISTOR
	R2	QRSA08J-471YN	RESISTOR
	R3	QRSA08J-471YN	RESISTOR
	R4	QRSA08J-222YN	RESISTOR
	R5	QRSA08J-474YN	RESISTOR
	R6	QRSA08J-474YN	RESISTOR
	R7	QRSA08J-222YN	RESISTOR
	R8	QRSA08J-103YN	RESISTOR
	R9	QRSA08J-123YN	RESISTOR
	R10	QRSA08J-103YN	RESISTOR
	R11	QRSA08J-153YN	RESISTOR

#⚠	REF NO.	PART NO.	PART NAME, DESCRIPTION
	R12	QRSA08J-123YN	RESISTOR
	R13	QRSA08J-273YN	RESISTOR
	R14	QRSA08J-103YN	RESISTOR
	R15	QRSA08J-153YN	RESISTOR
	C1	QER40JM-476	E CAPACITOR
	C2	QCYA1HK-103	CAPACITOR
	L1	PGZ00637-221	COIL
	CN1	PGZ01081-07	MICRO HEADER
	CN2	PGZ01081-05	MICRO HEADER
		-F-V CONVERTER MODULE-	
	IC1	MN4538BS	IC
	IC2	BA10324F	IC
	MOD6	PGE20163B3-01	FV CONV PWB ASSY
	R1	QRSA08J-103YN	RESISTOR
	R2	QRSA08J-105YN	RESISTOR
	R3	QRSA08J-184YN	RESISTOR
	R4	QRSA08J-184YN	RESISTOR
	R5	QRSA08J-103YN	RESISTOR
	R6	QRSA08J-103YN	RESISTOR
	R7	QRSA08J-183YN	RESISTOR
	R8	QRSA08J-272YN	RESISTOR
	R9	PU55509-102	V RESISTOR,SRH FWD
	R10	QRSA08J-472YN	RESISTOR
	R11	QRSA08J-562YN	RESISTOR
	R12	PU55509-222	V RESISTOR,SRH REV
	R13	QRSA08J-822YN	RESISTOR
	R14	QRSA08J-224YN	RESISTOR
	R15	QRSA08J-222YN	RESISTOR
	C1	QCYA1HK-103	CAPACITOR
	C2	QER40JM-476	E CAPACITOR
	C3	QCYA1HK-272	CAPACITOR
	C4	QCYA1HK-183	CAPACITOR
	C5	QCFA1EZ-104	CAPACITOR
	L1	PGZ00637-221	COIL
	CN1	PGZ01081-07	MICRO HEADER
		-D-FF MODULE-	
	MOD3	PGE20163A4	D-FF MODULE
	IC1	HA11780MP	IC
	IC2	HA11780MP	IC
	DA1	DA204K	DIODE
	R2	QVZ3513-224	V RESISTOR,NOR CH2 SW
	R3	QVZ3513-224	V RESISTOR,NOR CH1 SW
	R5	QRSA08J-224YN	RESISTOR
	R6	QRSA08J-224YN	RESISTOR
	R7	QRSA08J-103YN	RESISTOR
	R8	QRSA08J-103YN	RESISTOR
	R9	QVZ3513-224	V RESISTOR,SRH CH1 SW
	R10	QRSA08J-474YN	RESISTOR
	R11	QVZ3513-224	V RESISTOR,SRH CH2 SW
	R12	QRSA08J-474YN	RESISTOR
	R13	QRSA08J-104YN	RESISTOR
	R14	QRSA08J-103YN	RESISTOR
	R15	QRSA08J-103YN	RESISTOR
	C1	QCYA1HK-103	CAPACITOR
	C2	QER40JM-476	E CAPACITOR
	C3	QER41CM-106	E CAPACITOR

#⚠	REF NO.	PART NO.	PART NAME, DESCRIPTION
	C4	QER41CM-106	E CAPACITOR
	C5	QER40JM-226	E CAPACITOR
	L1	PGZ00637-221	COIL
	CN1	PGZ01081-08	MICRO HEADER
	CN2	PGZ01081-05	MICRO HEADER
		-2H DELAY MODULE-	
	IC1	MN50005JVES	IC
	IC2	MN4053BS	IC
	IC3	MN74HC157S	IC
	IC4	UPD41101G	IC
	IC5	MN74HC74S	IC
	IC6	MN74HC14S	IC
	MOD2	PGE30152B	2H DL PWB ASSY
	D1	DAN202K	DIODE
	D2	DAN202K	DIODE
	D3	RB400D	DIODE
	R1	QRSA08J-105YN	RESISTOR
	R4	QRSA08J-103YN	RESISTOR
	R5	QRSA08J-104YN	RESISTOR
	R6	QRSA08J-103YN	RESISTOR
	R7	QRSA08J-104YN	RESISTOR
	R8	QRSA08J-101YN	RESISTOR
	R9	QRSA08J-101YN	RESISTOR
	R10	QRSA08J-103YN	RESISTOR
	R11	QRSA08J-103YN	RESISTOR
	R12	QRSA08J-682YN	RESISTOR
	R13	QRSA08J-153YN	RESISTOR
	R14	QRSA08J-104YN	RESISTOR
	R15	QRSA08J-101YN	RESISTOR
	R16	QRSA08J-393YN	RESISTOR
	R17	QRSA08J-104YN	RESISTOR
	R18	QRSA08J-0R0Y	RESISTOR
	R20	QRSA08J-105YN	RESISTOR
	R21	QRSA08J-472YN	RESISTOR
	R22	QRSA08J-0R0Y	RESISTOR
	C1	QCYA1HK-103	CAPACITOR
	C7	QCYA1HK-102	CAPACITOR
	C8	QCYA1HK-152	CAPACITOR
	C9	QCYA1HK-561	CAPACITOR
	C10	QCTA1CH-100	CAPACITOR
	C11	QCTA1CH-100	CAPACITOR
	C12	QCFA1EZ-104	CAPACITOR
	C14	QCYA1HK-103	CAPACITOR
	C15	QCYA1HK-103	CAPACITOR
	C16	QCYA1HK-103	CAPACITOR
	C18	QCYA1HK-103	CAPACITOR
	X1	PGZ01007	CRYSTAL RESONATOR
	CN1	PGZ01081-06	MICRO HEADER
	CN2	PGZ01081-06	MICRO HEADER
		-DUB SYSTEM MODULE-	
	MOD4	PGE20163A5	DUB SYSTEM MODULE
	IC1	MN4053BS	IC
	IC2	MN4013BS	IC
	IC3	MN4001BS	IC
	Q1	IMX1	TRANSISTOR
	Q2	DTC144EU	TRANSISTOR
	Q3	IMX1	TRANSISTOR

SERVO-1

#⚠	REF NO.	PART NO.	PART NAME, DESCRIPTION
	Q4	2SC4081(QR)	TRANSISTOR
	D1	DAN202K	DIODE
	R1	QRSA08J-103YN	RESISTOR
	R2	QRSA08J-562YN	RESISTOR
	R3	QRSA08J-223YN	RESISTOR
	R4	QRSA08J-102YN	RESISTOR
	R5	QRSA08J-223YN	RESISTOR
	R6	QRSA08J-562YN	RESISTOR
	R7	QRSA08J-222YN	RESISTOR
	R8	QRSA08J-224YN	RESISTOR
	R9	QRSA08J-222YN	RESISTOR
	R10	QRSA08J-224YN	RESISTOR
	R11	QRSA08J-224YN	RESISTOR
	R12	QRSA08J-222YN	RESISTOR
	R13	QRSA08J-222YN	RESISTOR
	R14	QRSA08J-224YN	RESISTOR
	R15	QRSA08J-393YN	RESISTOR
	R16	QRSA08J-103YN	RESISTOR
	R17	QRSA08J-222YN	RESISTOR
	R18	QRSA08J-223YN	RESISTOR
	R19	QRSA08J-223YN	RESISTOR
	R20	QRSA08J-103YN	RESISTOR
	R23	QRSA08J-472YN	RESISTOR
	R24	QRSA08J-472YN	RESISTOR
	R25	QRSA08J-224YN	RESISTOR
	R26	QRSA08J-222YN	RESISTOR
	R27	QRSA08J-471YN	RESISTOR
	R28	QRSA08J-471YN	RESISTOR
	R29	QRSA08J-222YN	RESISTOR
	R30	QRSA08J-224YN	RESISTOR
	C1	QCYA1HK-103	CAPACITOR
	C2	QER40JM-476	E CAPACITOR
	C3	QEF81CM-105	TANTAL CAPACITOR
	C4	QCYA1HK-102	CAPACITOR
	L1	PGZ00637-221	COIL
	CN1	PGZ01081-09	MICRO HEADER
	CN2	PGZ01081-09	MICRO HEADER
		-SEARCH COUNTER MODULE-	
	MOD8	PGE20163A6-01	SEARCH COUNTER MODULE
	IC1	MN4021BS	IC
	IC2	UPD7564G-518	IC
	IC3	MN74HC163S	IC
	IC4	MN74HC163S	IC
	IC5	MN4053BS	IC
	IC7	MN4094BS	IC
	IC8	MN4094BS	IC
	IC9	TC4S69F	IC
	IC10	TC4S11F	IC
	D1	IMN10	DIODE
	D2	RD6.8EB3	ZENER DIODE
	R1	QRSA08J-224YN	RESISTOR
	R2	QRSA08J-224YN	RESISTOR
	R3	QRSA08J-224YN	RESISTOR
	R4	QRSA08J-102YN	RESISTOR
	R5	QRSA08J-102YN	RESISTOR
	R6	QRSA08J-102YN	RESISTOR
	R8	QRSA08J-224YN	RESISTOR
	R9	QRSA08J-224YN	RESISTOR
	R10	QRSA08J-102YN	RESISTOR
	R11	QRSA08J-102YN	RESISTOR
	R12	QRSA08J-102YN	RESISTOR

#⚠	REF NO.	PART NO.	PART NAME, DESCRIPTION
	R13	QRSA08J-102YN	RESISTOR
	R14	QRSA08J-224YN	RESISTOR
	R15	QRSA08J-224YN	RESISTOR
	R16	QRSA08J-224YN	RESISTOR
	R17	QRSA08J-224YN	RESISTOR
	R20	QRSA08J-102YN	RESISTOR
	R21	QRSA08J-102YN	RESISTOR
	R22	QRSA08J-103YN	RESISTOR
	R23	QRSA08J-103YN	RESISTOR
	R24	QRSA08J-103YN	RESISTOR
	R25	QRSA08J-103YN	RESISTOR
	R26	QRSA08J-153YN	RESISTOR
	R27	QRSA08J-103YN	RESISTOR
	R28	QRSA08J-102YN	RESISTOR
	R29	QRSA08J-102YN	RESISTOR
	R30	QRSA08J-102YN	RESISTOR
	R31	QRSA08J-102YN	RESISTOR
	R32	QRSA08J-102YN	RESISTOR
	R33	QRSA08J-102YN	RESISTOR
	R34	QRSA08J-102YN	RESISTOR
	R35	QRSA08J-104YN	RESISTOR
	R36	QRSA08J-103YN	RESISTOR
	R37	QRSA08J-103YN	RESISTOR
	R38	QRSA08J-103YN	RESISTOR
	R39	QRSA08J-103YN	RESISTOR
	R40	QRD161J-472	RESISTOR
⚠	C1	QCTA1CH-101	CAPACITOR
⚠	C2	QCTA1CH-101	CAPACITOR
	C4	QCFA1EZ-104	CAPACITOR
	C7	QCYA1HK-103	CAPACITOR
	C8	QCYA1HK-103	CAPACITOR
	C9	QER41HM-225	E CAPACITOR
⚠	X1	PGZ00825-02	CRYSTAL RESONATOR
	CN1	PGZ01081-10	MICRO HEADER
	CN2	PGZ01081-06	MICRO HEADER
	CN3	PGZ01081-06	MICRO HEADER
		-2H DELAY MODULE-	
	IC1	MN50005JVES	IC
	IC2	MN4053BS	IC
	IC3	MN74HC157S	IC
	IC4	UPD41101G	IC
	IC5	MN74HC74S	IC
	IC6	MN74HC14S	IC
	MOD5	PGE30152B	2H DL PWB ASSY
	D1	DAN202K	DIODE
	D2	DAN202K	DIODE
	D3	RB400D	DIODE
	R1	QRSA08J-105YN	RESISTOR
	R4	QRSA08J-103YN	RESISTOR
	R5	QRSA08J-104YN	RESISTOR
	R6	QRSA08J-103YN	RESISTOR
	R7	QRSA08J-104YN	RESISTOR
	R8	QRSA08J-101YN	RESISTOR
	R9	QRSA08J-101YN	RESISTOR
	R10	QRSA08J-103YN	RESISTOR
	R11	QRSA08J-103YN	RESISTOR
	R12	QRSA08J-682YN	RESISTOR
	R13	QRSA08J-153YN	RESISTOR
	R14	QRSA08J-104YN	RESISTOR
	R15	QRSA08J-101YN	RESISTOR
	R16	QRSA08J-393YN	RESISTOR
	R17	QRSA08J-104YN	RESISTOR
	R18	QRSA08J-0R0Y	RESISTOR

#⚠	REF NO.	PART NO.	PART NAME, DESCRIPTION
	R20	QRSA08J-105YN	RESISTOR
	R21	QRSA08J-472YN	RESISTOR
	R22	QRSA08J-0R0Y	RESISTOR
	C1	QCYA1HK-103	CAPACITOR
	C7	QCYA1HK-102	CAPACITOR
	C8	QCYA1HK-152	CAPACITOR
	C9	QCYA1HK-561	CAPACITOR
⚠	C10	QCTA1CH-100	CAPACITOR
⚠	C11	QCTA1CH-100	CAPACITOR
	C12	QCFA1EZ-104	CAPACITOR
	C14	QCYA1HK-103	CAPACITOR
	C15	QCYA1HK-103	CAPACITOR
	C16	QCYA1HK-103	CAPACITOR
	C18	QCYA1HK-103	CAPACITOR
	X1	PGZ01007	CRYSTAL RESONATOR
	CN1	PGZ01081-06	MICRO HEADER
	CN2	PGZ01081-06	MICRO HEADER

****

****
* 23. SERVO-2 BOARD ASSEMBLY <11> *
****

	PWBA	PGE10071C	SERVO-2 PWB ASSY
		-REEL SERVO SECTION-	
	IC1	TA7140P	IC
	IC2	MN4072BS	IC
	IC3	BA10324F	IC
	IC4	MN4069UBS	IC
	IC6	MN4094BS	IC
	IC7	MN4094BS	IC
	IC8	MN4066BS	IC
	IC9	MN4066BS	IC
	IC10	MN4066BS	IC
	IC11	BA6302A	IC
	IC12	BA10324F	IC
	IC13	MN4066BS	IC
	IC14	TC4S71F	IC
	Q1	2SD601	TRANSISTOR
	Q2	FMG2	TRANSISTOR
	Q4	FMW1	TRANSISTOR
	Q5	2SD601	TRANSISTOR
	Q6	2SD601	TRANSISTOR
	Q7	2SD601	TRANSISTOR
	Q8	2SD601	TRANSISTOR
	Q9	2SD601	TRANSISTOR
	Q10	DTA144EK	TRANSISTOR
	Q11	2SK621	FE TRANSISTOR
	Q12	2SB709	TRANSISTOR
	Q13	DTC144EK	TRANSISTOR
	Q14	DTC144EK	TRANSISTOR
	Q15	DTC144EK	TRANSISTOR
	Q17	2SD601	TRANSISTOR
	Q18	DTA144EK	TRANSISTOR
	Q19	2SD601	TRANSISTOR
	D1	DA204K	DIODE
	D2	DAN202K	DIODE
	D3	DAN202K	DIODE
	D4	DAN202K	DIODE
	D5	DAN202K	DIODE

#⚠	REF NO.	PART NO.	PART NAME, DESCRIPTION
	D8	DAN202K	DIODE
	R1	QRSA08J-103YN	RESISTOR
	R2	QRSA08J-103YN	RESISTOR
	R3	QRSA08J-102YN	RESISTOR
	R4	QRSA08J-331YN	RESISTOR
	R5	QRSA08J-471YN	RESISTOR
	R6	QRSA08J-561YN	RESISTOR
	R7	QRSA08J-563YN	RESISTOR
	R8	QRSA08J-103YN	RESISTOR
	R9	QRSA08J-561YN	RESISTOR
	R10	QRSA08J-103YN	RESISTOR
	R11	QRSA08J-103YN	RESISTOR
	R12	QRSA08J-103YN	RESISTOR
	R13	QRSA08J-333YN	RESISTOR
	R14	QRSA08J-472YN	RESISTOR
	R15	QRSA08J-124YN	RESISTOR
	R16	QRSA08J-103YN	RESISTOR
	R17	QRSA08J-682YN	RESISTOR
	R18	QRSA08J-222YN	RESISTOR
	R19	QRSA08J-823YN	RESISTOR
	R20	QRSA08J-224YN	RESISTOR
	R21	QRSA08J-224YN	RESISTOR
	R22	QRSA08J-823YN	RESISTOR
	R23	QRSA08J-154YN	RESISTOR
	R24	QRV143F-5361	CMF RESISTOR
	R25	QRV143F-3831	CMF RESISTOR
	R26	QRSA08J-153YN	RESISTOR
	R27	QRSA08J-105YN	RESISTOR
	R28	QRSA08J-103YN	RESISTOR
	R29	QRSA08J-562YN	RESISTOR
	R30	QRSA08J-332YN	RESISTOR
	R31	QRV143F-5361	CMF RESISTOR
	R32	QRV143F-5111	CMF RESISTOR
	R33	QRSA08J-103YN	RESISTOR
	R34	QRSA08J-103YN	RESISTOR
	R35	QRSA08J-103YN	RESISTOR
	R36	QRSA08J-473YN	RESISTOR
	R37	QRSA08J-104YN	RESISTOR
	R38	QRSA08J-224YN	RESISTOR
	R39	QRSA08J-103YN	RESISTOR
	R41	QRSA08J-473YN	RESISTOR
	R42	QRSA08J-473YN	RESISTOR
	R43	QRSA08J-473YN	RESISTOR
	R45	QRSA08J-102YN	RESISTOR
	R46	QRSA08J-222YN	RESISTOR
	R47	QRSA08J-392YN	RESISTOR
	R48	QRSA08J-222YN	RESISTOR
	R49	QRSA08J-332YN	RESISTOR
	R50	QRSA08J-103YN	RESISTOR
	R51	QRSA08J-222YN	RESISTOR
	R52	QRSA08J-392YN	RESISTOR
	R53	QRSA08J-222YN	RESISTOR
	R54	QRSA08J-332YN	RESISTOR
	R55	QRSA08J-103YN	RESISTOR
	R56	QRSA08J-152YN	RESISTOR
	R57	QRSA08J-104YN	RESISTOR
	R58	QRSA08J-103YN	RESISTOR
	R59	QRSA08J-103YN	RESISTOR
	R60	QRSA08J-104YN	RESISTOR
	R61	QRSA08J-103YN	RESISTOR
	R62	QRSA08J-121YN	RESISTOR
	R63	QRSA08J-121YN	RESISTOR
	R64	QRSA08J-102YN	RESISTOR
	R65	QRSA08J-103YN	RESISTOR
	R66	QRSA08J-103YN	RESISTOR
	R67	QRSA08J-273YN	RESISTOR
	R68	QRSA08J-154YN	RESISTOR

SERVO-2

#⚠	REF NO.	PART NO.	PART NAME, DESCRIPTION
	R69	QRSA08J-103YN	RESISTOR
	R70	QRSA08J-102YN	RESISTOR
	R71	QRSA08J-184YN	RESISTOR
	R72	QRSA08J-564YN	RESISTOR
	R73	QRSA08J-103YN	RESISTOR
	R74	QRSA08J-104YN	RESISTOR
	R75	QRSA08J-334YN	RESISTOR
	R76	QRSA08J-102YN	RESISTOR
	R77	QRSA08J-153YN	RESISTOR
	R78	QRSA08J-222YN	RESISTOR
	R79	QRSA08J-392YN	RESISTOR
	R80	QRSA08J-104YN	RESISTOR
	R81	QRSA08J-222YN	RESISTOR
	R82	QRSA08J-332YN	RESISTOR
	R83	QRSA08J-222YN	RESISTOR
	R84	QRSA08J-332YN	RESISTOR
	R85	QRSA08J-103YN	RESISTOR
	R86	QRSA08J-152YN	RESISTOR
	R87	QRSA08J-104YN	RESISTOR
	R88	QRSA08J-103YN	RESISTOR
	R89	QRSA08J-103YN	RESISTOR
	R90	QRSA08J-104YN	RESISTOR
	R91	QRSA08J-103YN	RESISTOR
	R92	QRD121J-681	RESISTOR
	R93	QRSA08J-103YN	RESISTOR
	R94	QRSA08J-103YN	RESISTOR
	R95	QRSA08J-224YN	RESISTOR
	R96	QRSA08J-473YN	RESISTOR
	R97	QRSA08J-222YN	RESISTOR
	R98	QRSA08J-103YN	RESISTOR
	R102	PU55509-102	V R,SUP DET LEVEL
	R103	PU55509-102	V R,SUP DC SET-2
	R104	PU55509-332	V R,SUP LIMIT LEVEL
	R105	PU55509-102	V R,SUP LOAD TENSION
	R106	PU55509-102	V R,SUP UNLOAD TENSION
	R107	PU55509-102	V R,SUP HLD TENSION
	R108	PU55509-102	V R,SUP UHLD TENSION
	R109	PU55509-102	V R,SUP DC SET-1
	R110	PU55509-102	V R,TU LD ULD HLD UHLD TEN.
	R111	PU55509-102	V R,TU TENSION
	R112	PU55509-334	V R,REV TENSION
	R113	PU55509-102	V R,TU STILL TENSION
	R114	PU55509-102	V R,TU DC SET
	R120	QRSA08J-103YN	RESISTOR
	R121	QRSA08J-103YN	RESISTOR
	R122	QRSA08J-103YN	RESISTOR
	R123	QRSA08J-103YN	RESISTOR
	R124	QRSA08J-103YN	RESISTOR
	R125	QRSA08J-103YN	RESISTOR
	R127	QRSA08J-103YN	RESISTOR
	R128	QRSA08J-475YN	RESISTOR
	R129	QRSA08J-103YN	RESISTOR
	R130	QRSA08J-103YN	RESISTOR
	R131	QRSA08J-103YN	RESISTOR
	R132	QRSA08J-103YN	RESISTOR
	R133	QRSA08J-103YN	RESISTOR
	R134	QRSA08J-103YN	RESISTOR
	R135	QRSA08J-103YN	RESISTOR
	R136	QRSA08J-103YN	RESISTOR
	R301	QRSA08J-0R0Y	RESISTOR(R301-360), X54
	C1	QETC1CM-106	E CAPACITOR
	C2	QETC1CM-476	E CAPACITOR
	C3	QFN31HJ-103	M CAPACITOR
	C4	QCYA1HK-103	CAPACITOR
	C5	QCYA1HK-103	CAPACITOR

#⚠	REF NO.	PART NO.	PART NAME, DESCRIPTION
	C6	QER61CM-106	E CAPACITOR
	C7	QER41CM-106	E CAPACITOR
	C8	QER61CM-106	E CAPACITOR
	C9	QETC1CM-476	E CAPACITOR
	C10	QFN31HJ-223	M CAPACITOR
	C11	QFN31HJ-223	M CAPACITOR
	C12	QFN41HJ-563	M CAPACITOR
	C13	QETC1CM-106	E CAPACITOR
	C14	QCYA1HK-103	CAPACITOR
	C15	QCYA1HK-103	CAPACITOR
	C16	QETC1CM-107	E CAPACITOR
	C17	QETC1HM-105	E CAPACITOR
	C18	QETA1CM-106	E CAPACITOR
	C19	QCYA1HK-103	CAPACITOR
	C20	QCFA1EZ-104	CAPACITOR
	C21	QETC1CM-106	E CAPACITOR
	C22	QCYA1HK-123	CAPACITOR
	C23	QETC1CM-106	E CAPACITOR
	C24	QFN31HJ-394	M CAPACITOR
	C25	QEN61CM-107	E CAPACITOR
	C26	QFN41HJ-153	M CAPACITOR
	C27	QETA1CM-106	E CAPACITOR
	C28	QETC1CM-106	E CAPACITOR
	C29	QFN31HJ-103	M CAPACITOR
	C30	QCFA1EZ-473	CAPACITOR
	C31	QETC1CM-107	E CAPACITOR
	C32	QCYA1HK-103	CAPACITOR
	C33	QCYA1HK-103	CAPACITOR
	C34	QCYA1HK-103	CAPACITOR
	C35	QCYA1HK-103	CAPACITOR
	C36	QCYA1HK-103	CAPACITOR
	C37	QETC1CM-106	E CAPACITOR
	C38	QETC1CM-106	E CAPACITOR
	C39	QETC1CM-106	E CAPACITOR
	C40	QETC1CM-106	E CAPACITOR
	C41	QCYA1HK-103	CAPACITOR
	C42	QETC1CM-106	E CAPACITOR
	C43	QEK61CM-107	E CAPACITOR
	C44	QCYA1HK-103	CAPACITOR
	C45	QETC1CM-107	E CAPACITOR
	C46	QCYA1HK-103	CAPACITOR
	C47	QFN31HJ-104	M CAPACITOR
	C48	QCYA1HK-103	CAPACITOR
	C50	QCS31HJ-331	CAPACITOR
	C51	QFN31HJ-273	M CAPACITOR
	C52	QCYA1HK-103	CAPACITOR
	C53	QETC1HM-335	E CAPACITOR
	C54	QCYA1HK-103	CAPACITOR
	C55	QCYA1HK-103	CAPACITOR
	C56	QETC1CM-106	E CAPACITOR
	C57	QETC1CM-106	E CAPACITOR
	C58	QETC1CM-106	E CAPACITOR
	C59	QETA1CM-106	E CAPACITOR
	C60	QCFA1EZ-104	CAPACITOR
	L1	PU48530-271J	PEAKING COIL
	L2	PU48530-271J	PEAKING COIL
	L3	PU48530-271J	PEAKING COIL
	L4	PU48530-271J	PEAKING COIL
	L5	PU44041-104	CHOKE COIL
	TP1	PU56008	TEST PIN, X15
		-CAPSTAN SERVO SECTION-	
	IC201	NJM2068MD	IC
	IC202	NJM2068MD	IC
	IC203	BA6993F	IC
	IC204	MN4030BS	IC

#⚠	REF NO.	PART NO.	PART NAME, DESCRIPTION
	IC205	VC2032	IC
	IC206	BA10358F	IC
	IC207	BA10358F	IC
	IC208	BA6993F	IC
	IC209	MN4538BS	IC
⚠	IC210	NJM78L05D	IC
	Q201	DTC144EK	TRANSISTOR
	Q202	DTA144EK	TRANSISTOR
	Q203	2SK128	FE TRANSISTOR
	Q204	DTC124EF	TRANSISTOR
	D201	DAN202K	DIODE
	D202	DAP202K	DIODE
	D203	DAN202K	DIODE
⚠	R201	PU52108-101K	POSISTOR
	R202	QRSA08J-103YN	RESISTOR
	R203	QRSA08J-103YN	RESISTOR
	R204	QRSA08J-102YN	RESISTOR
	R205	QRSA08J-333YN	RESISTOR
	R206	QRSA08J-103YN	RESISTOR
	R207	QRSA08J-103YN	RESISTOR
	R208	QRSA08J-102YN	RESISTOR
	R209	QRSA08J-333YN	RESISTOR
	R210	QRSA08J-102YN	RESISTOR
	R211	QRSA08J-102YN	RESISTOR
	R212	QRD161J-102	RESISTOR
	R213	QRSA08J-104YN	RESISTOR
	R214	QRSA08J-222YN	RESISTOR
	R215	QRSA08J-102YN	RESISTOR
	R216	QRD161J-102	RESISTOR
	R217	QRSA08J-102YN	RESISTOR
	R218	QRSA08J-123YN	RESISTOR
	R219	QRSA08J-222YN	RESISTOR
	R220	QRSA08J-823YN	RESISTOR
	R221	QRSA08J-102YN	RESISTOR
	R222	QRSA08J-823YN	RESISTOR
	R223	QRSA08J-102YN	RESISTOR
	R224	QRSA08J-102YN	RESISTOR
	R225	QRSA08J-102YN	RESISTOR
	R226	QRSA08J-472YN	RESISTOR
	R227	QRSA08J-472YN	RESISTOR
	R228	QRSA08J-102YN	RESISTOR
	R229	QRSA08J-102YN	RESISTOR
	R230	QRSA08J-103YN	RESISTOR
	R231	QRSA08J-103YN	RESISTOR
	R232	QRSA08J-103YN	RESISTOR
	R233	QRSA08J-103YN	RESISTOR
	R234	QRD161J-103	RESISTOR
	R236	QRSA08J-563YN	RESISTOR
	R237	QRSA08J-123YN	RESISTOR
	R238	QRSA08J-103YN	RESISTOR
	R239	QRSA08J-105YN	RESISTOR
	R240	QRSA08J-222YN	RESISTOR
	R241	QRSA08J-223YN	RESISTOR
	R242	QRSA08J-223YN	RESISTOR
	R243	QRSA08J-223YN	RESISTOR
	R244	QRSA08J-102YN	RESISTOR
	R246	QRSA08J-103YN	RESISTOR
	R247	QRD161J-472	RESISTOR
	R248	QRSA08J-473YN	RESISTOR
	R249	QRSA08J-103YN	RESISTOR
	R250	QRSA08J-103YN	RESISTOR
	R251	QRSA08J-473YN	RESISTOR
	R252	QRSA08J-473YN	RESISTOR
	R253	QRSA08J-473YN	RESISTOR
	R254	QRSA08J-473YN	RESISTOR
	R255	QRSA08J-104YN	RESISTOR

#⚠	REF NO.	PART NO.	PART NAME, DESCRIPTION
	R256	QRSA08J-472YN	RESISTOR
	R257	QRSA08J-102YN	RESISTOR
	R258	QRSA08J-153YN	RESISTOR
	R259	QRSA08J-122YN	RESISTOR
	R260	QRSA08J-102YN	RESISTOR
	R261	PU55509-102	V R,CAP FG A DUTY ADJ
	R262	PU55509-102	V R,CAP FG B DUTY ADJ
	R263	PU55509-332	V R,STOP SERVO DUTY ADJ
	R264	PU55509-332	V R,STOP SERVO LEVEL ADJ
	R270	QRSA08J-105YN	RESISTOR
	C201	QCYA1HK-103	CAPACITOR
	C202	QETC1CM-476	E CAPACITOR
	C203	QETC1CM-476	E CAPACITOR
	C204	QCYA1HK-103	CAPACITOR
	C205	QCYA1HK-103	CAPACITOR
	C206	QETC1CM-476	E CAPACITOR
	C207	QETC1CM-476	E CAPACITOR
	C208	QCYA1HK-103	CAPACITOR
	C209	QETC1CM-106	E CAPACITOR
	C210	QETC1CM-106	E CAPACITOR
	C211	QCTA1CH-680	CAPACITOR
	C212	QCTA1CH-680	CAPACITOR
	C213	QCYA1HK-103	CAPACITOR
	C214	QCYA1HK-103	CAPACITOR
	C215	QCYA1HK-103	CAPACITOR
	C216	QETC1CM-476	E CAPACITOR
	C217	QCTA1CH-101	CAPACITOR
	C218	QCTA1CH-101	CAPACITOR
	C219	QETC1CM-476	E CAPACITOR
	C220	QCYA1HK-103	CAPACITOR
	C221	QETC1CM-476	E CAPACITOR
	C222	QCYA1HK-103	CAPACITOR
	C223	QCTA1CH-101	CAPACITOR
	C224	QCTA1CH-221	CAPACITOR
	C225	QETC1CM-476	E CAPACITOR
	C226	QFN31HJ-104	M CAPACITOR
	C228	QCYA1HK-103	CAPACITOR
	C229	QETC1CM-106	E CAPACITOR
	C230	QETC1CM-476	E CAPACITOR
	C231	QCYA1HK-103	CAPACITOR
	C232	QCYA1HK-103	CAPACITOR
	C233	QETC1CM-106	E CAPACITOR
	C234	QFN31HJ-473	M CAPACITOR
	C235	QCYA1HK-103	CAPACITOR
	C236	QCYA1HK-333	CAPACITOR
	C237	QETC1CM-476	E CAPACITOR
	C238	QCYA1HK-103	CAPACITOR
	L202	PU48530-271J	PEAKING COIL
	L203	PU48530-271J	PEAKING COIL
	L204	PU48530-271J	PEAKING COIL
	L205	PU48530-271J	PEAKING COIL
	L206	PU48530-271J	PEAKING COIL
	L208	PU48530-271J	PEAKING COIL
	L209	PU48530-271J	PEAKING COIL
	TP201	PU56008	TEST PIN, X12(TP201-212)
	CN1	PGZ00421-64	MALE CONNECTOR
	CN2	PU58844-7	CAP HOUSING
	CN3	PU58844-7	CAP HOUSING

****

SYSCON

#⚠	REF NO.	PART NO.	PART NAME, DESCRIPTION
			********** 24. SYSCON BOARD ASSEMBLY <12> **********
	PWBA	PGE20170B-02	SYSCON PWB ASSY
	IC1	HD6303RP	IC
	IC2	PGD30241-4-6	IC
	IC3	TMP82C55AF-2	IC
	IC4	PGD30430-1-4	IC
	IC5	MN74HC00S	IC
	IC6	MN74HC00S	IC
	IC7	MN4021BS	IC
	IC8	MN4021BS	IC
	IC9	MN4021BS	IC
	IC10	MN4021BS	IC
	IC11	MN4021BS	IC
	IC12	MN4021BS	IC
	IC14	UPD6345GS	IC
	IC15	UPD6345GS	IC
	IC17	MN4053BS	IC
	IC18	TC35094P	IC
	IC19	BA10358F	IC
	IC20	MN4029BS	IC
	IC21	UPD554C-058	IC
	IC22	TD62503F	IC
	IC23	TD62503F	IC
	IC24	MN4094BS	IC
	IC25	MN4094BS	IC
	IC26	MN4094BS	IC
	IC27	MN4013BS	IC
	Q1	DTC114YK	TRANSISTOR
	Q2	DTA114YK	TRANSISTOR
	Q3	DTA114YK	TRANSISTOR
	Q4	DTC114YK	TRANSISTOR
	Q5	DTC114YK	TRANSISTOR
	Q6	DTA114YK	TRANSISTOR
	Q7	DTA114YK	TRANSISTOR
	Q9	DTC114YK	TRANSISTOR
	Q10	DTA114YK	TRANSISTOR
	Q11	DTC114YK	TRANSISTOR
	Q12	DTA114YK	TRANSISTOR
	Q13	DTA114YK	TRANSISTOR
	Q14	DTC114YK	TRANSISTOR
	Q15	2SB793AR	TRANSISTOR
	Q16	DTC114YK	TRANSISTOR
	D1	RD5.6ESB1	ZENER DIODE
	D2	RD5.6ESB1	ZENER DIODE
	D3	DAN202K	DIODE ARRAY
	D4	DAN202K	DIODE ARRAY
	D5	DAN202K	DIODE ARRAY
	D6	DAN202K	DIODE ARRAY
	D7	DAN202K	DIODE ARRAY
	D8	DAN202K	DIODE ARRAY
	D9	RD3.0ESB2	ZENER DIODE
	D10	DAN202K	DIODE ARRAY
	D11	DAN202K	DIODE ARRAY
	D12	DAN202K	DIODE ARRAY
	D14	DAN202K	DIODE
	D15	DAN202K	DIODE
	R1	QRSA08J-473YN	RESISTOR
	R2	QRSA08J-473YN	RESISTOR
	R3	QRSA08J-271YN	RESISTOR
	R4	QRSA08J-271YN	RESISTOR
	R5	QRSA08J-271YN	RESISTOR
	R6	QRSA08J-562YN	RESISTOR
	R7	QRSA08J-562YN	RESISTOR
	R8	QRSA08J-334YN	RESISTOR
	R10	QRSA08J-103YN	RESISTOR
	R13	QRSA08J-103YN	RESISTOR
	R14	QRSA08J-103YN	RESISTOR
	R16	QRSA08J-103YN	RESISTOR
	R17	QRSA08J-103YN	RESISTOR
	R18	QRSA08J-103YN	RESISTOR
	R19	QRSA08J-103YN	RESISTOR
	R20	QRSA08J-103YN	RESISTOR
	R21	QRSA08J-334YN	RESISTOR
	R22	QRSA08J-103YN	RESISTOR
	R23	QRSA08J-102YN	RESISTOR
	R24	QRSA08J-102YN	RESISTOR
	R25	QRSA08J-102YN	RESISTOR
	R26	QRSA08J-102YN	RESISTOR
	R30	QRSA08J-103YN	RESISTOR
	R31	QRSA08J-103YN	RESISTOR
	R32	QRSA08J-103YN	RESISTOR
	R34	QRSA08J-102YN	RESISTOR
	R35	QRSA08J-103YN	RESISTOR
	R36	QRSA08J-103YN	RESISTOR
	R40	QRSA08J-103YN	RESISTOR
	R41	QRSA08J-102YN	RESISTOR
	R42	QRSA08J-102YN	RESISTOR
	R43	QRSA08J-103YN	RESISTOR
	R44	QRSA08J-103YN	RESISTOR
	R45	QRSA08J-334YN	RESISTOR
	R46	QRSA08J-334YN	RESISTOR
	R47	QRSA08J-472YN	RESISTOR
	R48	QRSA08J-334YN	RESISTOR
	R49	QRSA08J-334YN	RESISTOR
	R50	QRSA08J-103YN	RESISTOR
	R51	QRSA08J-103YN	RESISTOR
	R52	QRSA08J-103YN	RESISTOR
	R53	QRSA08J-334YN	RESISTOR
	R54	QRSA08J-334YN	RESISTOR
	R55	QRSA08J-472YN	RESISTOR
	R58	QRSA08J-102YN	RESISTOR
	R59	QRSA08J-103YN	RESISTOR
	R60	QRSA08J-103YN	RESISTOR
	R62	QRSA08J-102YN	RESISTOR
	R63	QRSA08J-102YN	RESISTOR
	R64	QRSA08J-102YN	RESISTOR
	R65	QRSA08J-102YN	RESISTOR
	R66	QRSA08J-102YN	RESISTOR
	R67	QRSA08J-102YN	RESISTOR
	R69	QRSA08J-102YN	RESISTOR
	R70	QRSA08J-102YN	RESISTOR
	R71	QRSA08J-102YN	RESISTOR
	R74	QRSA08J-103YN	RESISTOR
	R75	QRSA08J-103YN	RESISTOR
	R76	QRSA08J-103YN	RESISTOR
	R77	QRSA08J-103YN	RESISTOR
	R78	QRSA08J-103YN	RESISTOR
	R79	QRSA08J-103YN	RESISTOR
	R80	QRSA08J-103YN	RESISTOR
	R83	QRSA08J-473YN	RESISTOR
	R84	QRSA08J-273YN	RESISTOR
	R85	QRSA08J-103YN	RESISTOR
	R89	PU55509-103	V R,V.SPEED A/D ADJ
⚠	R90	QRSA08J-105YN	RESISTOR
	R91	QRSA08J-271YN	RESISTOR

#⚠	REF NO.	PART NO.	PART NAME, DESCRIPTION
	R92	QRSA08J-271YN	RESISTOR
	R93	QRSA08J-271YN	RESISTOR
	R94	QRSA08J-271YN	RESISTOR
	R95	QRSA08J-271YN	RESISTOR
	R96	QRSA08J-271YN	RESISTOR
	R98	QRSA08J-271YN	RESISTOR
	R99	QRSA08J-271YN	RESISTOR
	R100	QRSA08J-271YN	RESISTOR
	R101	QRSA08J-334YN	RESISTOR
	R102	QRSA08J-103YN	RESISTOR
	R103	QRSA08J-101YN	RESISTOR
	R104	QRSA08J-473YN	RESISTOR
	R105	QRSA08J-222YN	RESISTOR
	R107	QRSA08J-271YN	RESISTOR
	R110	QRSA08J-102YN	RESISTOR
	R111	QRSA08J-102YN	RESISTOR
	R112	QRSA08J-103YN	RESISTOR
	R113	QRSA08J-103YN	RESISTOR
	R114	QRSA08J-271YN	RESISTOR
	R115	QRSA08J-0R0Y	RESISTOR
	R117	QRSA08J-271YN	RESISTOR
	R118	QRSA08J-271YN	RESISTOR
	R119	QRSA08J-271YN	RESISTOR
	R120	QRSA08J-271YN	RESISTOR
	R121	QRSA08J-271YN	RESISTOR
	R122	QRSA08J-271YN	RESISTOR
	R123	QRSA08J-271YN	RESISTOR
	R124	QRSA08J-271YN	RESISTOR
	R125	QRSA08J-271YN	RESISTOR
	R126	QRSA08J-271YN	RESISTOR
	R127	QRSA08J-271YN	RESISTOR
	R128	QRSA08J-271YN	RESISTOR
	R129	QRSA08J-271YN	RESISTOR
	R130	QRSA08J-271YN	RESISTOR
	R131	QRSA08J-271YN	RESISTOR
	R132	QRSA08J-271YN	RESISTOR
	R133	QRSA08J-271YN	RESISTOR
	R134	QRSA08J-271YN	RESISTOR
	R135	QRSA08J-271YN	RESISTOR
	R136	QRSA08J-271YN	RESISTOR
	R137	QRSA08J-271YN	RESISTOR
	R138	QRSA08J-271YN	RESISTOR
	R139	QRSA08J-271YN	RESISTOR
	R140	QRSA08J-271YN	RESISTOR
	R141	QRSA08J-102YN	RESISTOR
	R142	QRSA08J-334YN	RESISTOR
	R143	QRSA08J-101YN	RESISTOR
	R144	QRSA08J-334YN	RESISTOR
	R145	QRSA08J-101YN	RESISTOR
	R146	QRSA08J-334YN	RESISTOR
	R147	QRSA08J-101YN	RESISTOR
	R148	QRD167J-102	RESISTOR
	RA1	EXB-P88334M	RESISTOR ARRAY
	RA2	EXB-P88334M	RESISTOR ARRAY
	RA3	EXB-P88334M	RESISTOR ARRAY
	RA4	EXB-P88334M	RESISTOR ARRAY
	RA5	EXB-P88103M	RESISTOR ARRAY
	RA6	EXB-P88334M	RESISTOR ARRAY
	RA7	EXB-P88334M	RESISTOR ARRAY
	RA8	EXB-P88334M	RESISTOR ARRAY
	C1	QCYA1HK-103	CAPACITOR
⚠	C2	QCSA1HJ-560	CAPACITOR
⚠	C3	QCSA1HJ-470	CAPACITOR
	C4	QCY81EK-104	CAPACITOR
	C5	QCY81EK-104	CAPACITOR
	C7	QCYA1HK-223	CAPACITOR
	C8	QCYA1HK-223	CAPACITOR

#⚠	REF NO.	PART NO.	PART NAME, DESCRIPTION
	C9	QCYA1HK-223	CAPACITOR
	C10	QCYA1HK-223	CAPACITOR
	C11	QCYA1HK-223	CAPACITOR
	C12	QCY81EK-104	CAPACITOR
	C13	QCY81EK-104	CAPACITOR
	C14	QCY81EK-104	CAPACITOR
⚠	C15	QCSA1HJ-471	CAPACITOR
⚠	C16	QCSA1HJ-121	CAPACITOR
⚠	C18	QCSA1HJ-220	CAPACITOR
⚠	C19	QCSA1HJ-220	CAPACITOR
	C20	QETC1EM-107	E CAPACITOR
	C21	QETC1EM-107	E CAPACITOR
	C22	QCY81EK-104	CAPACITOR
	C23	QCY81EK-104	CAPACITOR
	C24	QCY81EK-104	CAPACITOR
	C25	QETC1EM-107	E CAPACITOR
	C26	QCY81EK-104	CAPACITOR
	C27	QETC1EM-107	E CAPACITOR
	C29	QCYA1HK-223	CAPACITOR
	C30	QCY81EK-104	CAPACITOR
	C31	QCY81EK-104	CAPACITOR
	C32	QCY81EK-104	CAPACITOR
	C33	QCY81EK-104	CAPACITOR
	C34	QCY81EK-104	CAPACITOR
	C35	QCY81EK-104	CAPACITOR
	C36	QCY81EK-104	CAPACITOR
	C38	QCY81EK-104	CAPACITOR
	C39	QCY81EK-104	CAPACITOR
	C40	QCY81EK-104	CAPACITOR
	C41	QCY81EK-104	CAPACITOR
	C42	QCY81EK-104	CAPACITOR
	C43	QCY81EK-104	CAPACITOR
	C44	QCY81EK-104	CAPACITOR
	C46	QCY81EK-104	CAPACITOR
	C47	QCY81EK-104	CAPACITOR
	C48	QCY81EK-104	CAPACITOR
	C49	QCSA1HJ-102	CAPACITOR
	C50	QCSA1HJ-102	CAPACITOR
	C51	QER41HM-474	E CAPACITOR
	C52	QCY81EK-104	CAPACITOR
	C53	QETC1EM-107	E CAPACITOR
	L1	PU48530-221J	PEAKING COIL
	L2	PGZ00617-221	CHOKE COIL
	L3	PU48530-221J	PEAKING COIL
	L4	PU48530-221J	PEAKING COIL
⚠	CF1	PU55812	RESONATOR
⚠	CF2	PGZ00067	CERAMIC FILTER
	CF3	PU53580	RESONATOR
	S1	QSS1K81-L01	DIP SWITCH
	S2	QSS1K81-L01	DIP SWITCH
	S3	QSS1K81-L01	DIP SWITCH
	SKT1	PGZ00331-028	IC SOCKET, FOR IC2
	TP1	PU54983	TEST PIN
	CN1	PGZ00421-100	MALE CONNECTOR
	CN2	PGZ00757-112	CONNECTOR
	CN3	PGZ00757-112	CONNECTOR
	CN4	PGZ00757-112	CONNECTOR

****

END SENSOR, DRIVER

#⚠	REF NO.	PART NO.	PART NAME, DESCRIPTION
			**********
			* 25. END SENSOR BOARD <13> *
			**********
	PWB	PGE40151	END SENSOR BOARD
	Q1	PT-352V	PHOTO TRANSISTOR
	VA1	PU49624-2	VARISTOR
	VA2	PU49624-2	VARISTOR
			**********
			**********
			* 26. DRIVER BOARD ASSEMBLY <14> *
			**********
	PWBA	PGE10073A-03	DRIVER BOARD ASSY
	IC1	BA10358F	IC
	IC2	MN4021BS	IC
	IC3	MN4021BS	IC
	IC4	MN4094BS	IC
	IC5	M54519P	IC
	IC6	M54543L	IC
	IC7	M54543L	IC
	IC101	UPC1246G	IC
	IC201	BA222	IC
	IC202	M51207L	IC
	IC203	BA10358F	IC
	IC204	MN4053BS	IC
	IC205	M51207L	IC
	Q1	DTC124EK	TRANSISTOR
	Q2	2SB907	TRANSISTOR
	Q3	2SB907	TRANSISTOR
	Q4	2SB907	TRANSISTOR
	Q5	2SB907	TRANSISTOR
	Q6	2SB907	TRANSISTOR
	Q7	2SB907	TRANSISTOR
	Q9	2SD1276(PQ)	TRANSISTOR
	Q10	DTC124EK	TRANSISTOR
	Q11	DTC124EK	TRANSISTOR
	Q12	DTC124EK	TRANSISTOR
	Q13	DTC124EK	TRANSISTOR
	Q14	DTC124EK	TRANSISTOR
	Q101	2SD553(Y)	TRANSISTOR
	Q102	2SD636Q	TRANSISTOR
	Q103	2SB1019(Y)	TRANSISTOR
	Q104	2SD636Q	TRANSISTOR
	Q105	2SB1019(Y)	TRANSISTOR
	Q106	2SD636Q	TRANSISTOR
	Q107	2SB1019(Y)	TRANSISTOR
	Q108	2SD636Q	TRANSISTOR
	Q109	2SD1412(Y)	TRANSISTOR
	Q110	2SD636Q	TRANSISTOR
	Q111	2SD1412(Y)	TRANSISTOR
	Q112	2SD636Q	TRANSISTOR
	Q113	2SD1412(Y)	TRANSISTOR
	Q201	2SD636R,S	TRANSISTOR
	Q202	2SD636R,S	TRANSISTOR
	Q203	2SA1388(Y)	TRANSISTOR
	Q204	2SD636R,S	TRANSISTOR
	Q205	2SD636R,S	TRANSISTOR
	Q206	2SA1388(Y)	TRANSISTOR
	Q207	2SD1276(PQ)	TRANSISTOR
	Q208	2SD1276(PQ)	TRANSISTOR
	Q209	DTC144EK	TRANSISTOR
	D1	RD12EB1	ZENER DIODE
	D2	DAN202K	DIODE
	D101	DAN202K	DIODE
	D201	RK44LF-K5	DIODE
	D202	RK44LF-K5	DIODE
	D203	MA3056(M)	ZENER DIODE
	D204	MA3056(M)	ZENER DIODE
	D205	DAP202K	DIODE
	DA1	IMN10	DIODE
	DA2	IMN10	DIODE
	R1	QRD161J-103	RESISTOR
	R2	QRD161J-184	RESISTOR
	R3	QRD161J-224	RESISTOR
	R4	QRD161J-103	RESISTOR
	R5	QRD161J-472	RESISTOR
	R6	QRD161J-222	RESISTOR
	R7	QRD161J-333	RESISTOR
	R8	QRD161J-103	RESISTOR
	R9	QRD161J-103	RESISTOR
	R10	QRD123J-151S	RESISTOR
	R11	QRD161J-103	RESISTOR
	R12	QRD161J-103	RESISTOR
	R13	QRD161J-103	RESISTOR
	R14	QRD161J-103	RESISTOR
	R15	QRD161J-102	RESISTOR
	R16	QRD161J-103	RESISTOR
	R17	QRD161J-103	RESISTOR
	R18	QRD161J-103	RESISTOR
	R19	QRD161J-103	RESISTOR
	R20	QRD161J-103	RESISTOR
	R21	QRD161J-103	RESISTOR
	R22	QRD161J-103	RESISTOR
	R23	QRD161J-103	RESISTOR
	R24	QRD161J-103	RESISTOR
	R25	QRD161J-124	RESISTOR
	R26	QRD161J-124	RESISTOR
	R27	QRD161J-331	RESISTOR
	R28	QRD161J-221	RESISTOR
	R29	QRD161J-102	RESISTOR
	R30	QRD161J-102	RESISTOR
	R31	QRD161J-102	RESISTOR
	R32	QRD161J-102	RESISTOR
	R33	QRD161J-473	RESISTOR
	R34	QRD161J-473	RESISTOR
	R35	QRD161J-222	RESISTOR
	R36	QRD161J-222	RESISTOR
	R37	QRD161J-222	RESISTOR
	R38	QRD161J-473	RESISTOR
	R39	QRD161J-473	RESISTOR
	R40	QRD161J-222	RESISTOR
	R41	QRD161J-222	RESISTOR
	R42	QRD161J-222	RESISTOR
	R43	QRD161J-473	RESISTOR
	R44	QRD161J-473	RESISTOR
	R45	QRD161J-222	RESISTOR
	R46	QRD161J-222	RESISTOR
	R47	QRD161J-222	RESISTOR
	R50	QRD161J-102	RESISTOR
	R51	QRD161J-103	RESISTOR
	R52	QRD161J-103	RESISTOR
	R53	QRD161J-103	RESISTOR

#⚠	REF NO.	PART NO.	PART NAME, DESCRIPTION
	R54	QRD161J-104	RESISTOR
	R101	QRD161J-331	RESISTOR
	R102	QRD161J-331	RESISTOR
	R103	QRD161J-103	RESISTOR
	R104	QRD183J-102	RESISTOR
	R105	QRD183J-102	RESISTOR
	R106	QRD183J-102	RESISTOR
	R107	QRD161J-102	RESISTOR
	R108	QRG019J-561S	OMF RESISTOR
	R109	QRD161J-102	RESISTOR
	R110	QRG019J-561S	OMF RESISTOR
	R111	QRD161J-102	RESISTOR
	R112	QRG019J-561S	OMF RESISTOR
	R113	QRD161J-102	RESISTOR
	R114	QRD161J-102	RESISTOR
	R115	QRD161J-102	RESISTOR
	R116	QRD161J-220	RESISTOR
	R117	QRD161J-220	RESISTOR
	R118	QRD161J-220	RESISTOR
	R119	QRG019J-561S	OMF RESISTOR
	R120	QRG019J-561S	OMF RESISTOR
	R121	QRG019J-561S	OMF RESISTOR
	R122	QRD161J-102	RESISTOR
	R123	QRD161J-102	RESISTOR
	R124	QRD161J-102	RESISTOR
	R125	QRD161J-102	RESISTOR
	R201	QRD161J-223	RESISTOR
	R202	QRD161J-473	RESISTOR
	R203	QRD161J-392	RESISTOR
	R204	QRD161J-223	RESISTOR
	R205	QRD161J-103	RESISTOR
	R206	QRD161J-103	RESISTOR
	R207	QRD161J-105	RESISTOR
	R208	QRD161J-394	RESISTOR
	R209	QRD161J-224	RESISTOR
	R210	QRD161J-472	RESISTOR
	R211	QRD161J-472	RESISTOR
	R212	QRSA08J-272YN	RESISTOR
	R213	QRD161J-102	RESISTOR
	R214	QRG019J-271S	OMF RESISTER
	R215	QRD161J-103	RESISTOR
	R216	QRD161J-103	RESISTOR
	R217	QRD161J-103	RESISTOR
	R218	QRD161J-392	RESISTOR
	R219	QRD161J-223	RESISTOR
	R220	QRD161J-103	RESISTOR
	R221	QRD161J-103	RESISTOR
	R222	QRD161J-394	RESISTOR
	R223	QRD161J-105	RESISTOR
	R224	QRD161J-224	RESISTOR
	R225	QRSA08J-272YN	RESISTOR
	R226	QRD161J-102	RESISTOR
	R227	QRG019J-271S	OMF RESISTER
	R228	QRD161J-103	RESISTOR
	R229	QRD161J-103	RESISTOR
	R230	QRD161J-103	RESISTOR
	R231	QRD161J-392	RESISTOR
	R232	QRSA08J-224YN	RESISTOR
	R233	QRD161J-224	RESISTOR
	R234	QRD161J-224	RESISTOR
	R235	QRD161J-223	RESISTOR
	R236	QRD161J-221	RESISTOR
	R237	QRD161J-221	RESISTOR
	R238	QRD161J-223	RESISTOR
	R239	QRD161J-221	RESISTOR
	R240	QRD161J-221	RESISTOR

#⚠	REF NO.	PART NO.	PART NAME, DESCRIPTION
	R241	QRX019J-R47S	MF RESISTOR
	R242	QRD161J-102	RESISTOR
	R243	QRD161J-102	RESISTOR
	R244	QRX019J-R47S	MF RESISTOR
	R245	QRD161J-102	RESISTOR
	R246	QRD161J-102	RESISTOR
	R250	QRSA08J-0R0Y	RESISTOR
	R254	QRSA08J-0R0Y	RESISTOR
	RA1	EXB-P85103M	RESISTER ARRAY
	RA2	EXB-P83104M	RESISTOR ARRAY
	RA3	EXB-P84223M	RESISTOR ARRAY
	C1	QCF31HP-223	CAPACITOR
	C2	QETC1EM-476	E CAPACITOR
	C3	QETC1CM-476	E CAPACITOR
	C4	QCF31HP-223	CAPACITOR
	C5	QETC1CM-226	E CAPACITOR
	C6	QCF31HP-103	CAPACITOR
	C7	QCF31HP-103	CAPACITOR
	C8	QER51EM-475G	E CAPACITOR
	C9	QCF31HP-103	CAPACITOR
	C10	QCF31HP-103	CAPACITOR
	C11	QCF31HP-103	CAPACITOR
	C12	QCF31HP-223	CAPACITOR
	C13	QCF31HP-223	CAPACITOR
	C14	QCF31HP-103	CAPACITOR
	C15	QCF31HP-103	CAPACITOR
	C16	QETC1CM-106	E CAPACITOR
	C17	QETC1CM-106	E CAPACITOR
	C18	QETC1CM-106	E CAPACITOR
	C19	QETC1CM-476	E CAPACITOR
	C20	QCF31HP-223	CAPACITOR
	C21	QCF31HP-103	CAPACITOR
	C22	QETC1CM-476	E CAPACITOR
	C23	QETC1CM-106	E CAPACITOR
	C24	QCS31HJ-121	CAPACITOR
	C25	QCS31HJ-121	CAPACITOR
	C26	QCS31HJ-121	CAPACITOR
	C101	QCF31HP-103	CAPACITOR
	C102	QCF31HP-223	CAPACITOR
	C103	QCF31HP-223	CAPACITOR
	C104	QETC1CM-476	E CAPACITOR
	C105	QETC1HM-104	E CAPACITOR
	C106	QETC1CM-226	E CAPACITOR
	C107	QETC1CM-226	E CAPACITOR
	C108	QETC1CM-226	E CAPACITOR
	C109	QETA1CM-227	E CAPACITOR
	C201	QETC1EM-227	E CAPACITOR
	C202	QCF31HP-223	CAPACITOR
	C203	QETC1EM-107	E CAPACITOR
	C204	QETC1EM-107	E CAPACITOR
	C205	QETC1EM-107	E CAPACITOR
	C206	QCF31HP-103	CAPACITOR
	C207	QETC1EM-107	E CAPACITOR
	C208	QFN31HK-122	M CAPACITOR
	C209	QFN31HK-273	M CAPACITOR
	C210	QCF31HP-103	CAPACITOR
	C211	QETC1EM-107	E CAPACITOR
	C213	QETC1CM-107	E CAPACITOR
	C214	QCF31HP-103	CAPACITOR
	C215	QFN31HK-273	M CAPACITOR
	C216	QCF31HP-103	CAPACITOR
	C217	QETC1EM-107	E CAPACITOR
	C219	QETA1EM-477	E CAPACITOR
	C220	QCF31HP-223	CAPACITOR
	C221	QETC1CM-106	E CAPACITOR

DRIVER, LED, MOTHER

#⚠	REF NO.	PART NO.	PART NAME, DESCRIPTION
	C222	QETA1EM-477	E CAPACITOR
	C223	QCF31HP-223	CAPACITOR
	C224	QETC1CM-106	E CAPACITOR
	C225	QCF31HP-103	CAPACITOR
	C226	QETC1EM-106	E CAPACITOR
	C227	QETC1EM-106	E CAPACITOR
	C228	QCF31HP-223	CAPACITOR
	L1	PU48530-221J	PEAKING COIL
	L2	PGZ00480	CHOKE COIL
	L101	PGZ00480	CHOKE COIL
	L102	PU48530-221J	PEAKING COIL
	L201	PU50277	INDUCTOR
	L202	PU48530-271J	PEAKING COIL
	L203	PU48530-271J	PEAKING COIL
	L204	PU48530-271J	PEAKING COIL
	L205	PU48530-271J	PEAKING COIL
	L206	PU50755	CHOKE COIL
	L207	PU50755	CHOKE COIL
⚠	K201	PGZ00354	FERRITE BEADS
	BKT1	PGD30371	MDA BOARD BRACKET
⚠	HS1	PGD40689	HEAT SINK
	SCW1	SDSP3010Z	SCREW
	SCW2	GBST3006Z	SCREW, X2
	SLD1	PU43135-2-15	NYLON EDGGING
	SPC1	PGZ00150	TRANSISTOR SPACER
	SPC2	PU41624-6	ISOLAT WASHER
	TP201	PU54983	TEST PIN, X14(TP201-214)
	CN1	PU58844-4R	CAP HOUSING
	CN2	PU58844-2	CAP HOUSING
	CN3	PU53587-2	CAP HOUSING
	CN4	PU43351-2R	CAP HOUSING
	CN5	PU58844-9	CAP HOUSING
	CN6	PU58844-3	CAP HOUSING
	CN7	PU43351-4	CAP HOUSING
	CN8	PU58844-4Y	CAP HOUSING
	CN9	PU58844-8	CAP HOUSING
	CN10	PU43351-2	CAP HOUSING
	CN12	PU43351-3R	CAP HOUSING
	CN13	PU43351-3Y	CAP HOUSING
	CN14	PU43351-3	CAP HOUSING
	CN21	PU58844-15	CAP HOUSING
	CN22	PU58844-6	CAP HOUSING
	CN23	PU58844-6R	CAP HOUSING
	CN31	PU58844-10	CAP HOUSING
	CN32	PU58844-2R	CAP HOUSING
	CN33	PU58844-2	CAP HOUSING

****

****
* 27. LED BOARD <15> *
****

	HLD1	PQ30101A	LED HOLDER,INCL.LED BOARD
	D1	GL-450V	LE DIODE

****

#⚠	REF NO.	PART NO.	PART NAME, DESCRIPTION

****
* 28. MOTHER BOARD ASSEMBLY <16> *
****

	PWBA	PGE10102B	MOTHER BOARD ASSY
	BKT1	PGD40679-02	MOTHER BOARD BRACKET
	SCW1	GBST3008Z	TAPPING SCREW,X5
	CN1	PGZ00420-100	FEMALE CONNECTOR
	CN2	PGZ00420-64	FEMALE CONNECTOR
	CN3	PGZ00420-100	FEMALE CONNECTOR
	CN4	PGZ00420-64	FEMALE CONNECTOR
	CN5	PGZ00420-100	FEMALE CONNECTOR
	CN6	PGZ00420-64	FEMALE CONNECTOR
	CN7	PGZ00420-100	FEMALE CONNECTOR
	CN8	PGZ00420-100	FEMALE CONNECTOR
	CN9	PGZ00420-64	FEMALE CONNECTOR
	CN10	PGZ00806-04	SMT HOUSING
	CN11	PGZ00806-04	SMT HOUSING
	CN13	PGZ00806-04	SMT HOUSING
	CN14	PGZ00806-04	SMT HOUSING
	CN15	PGZ00806-04	SMT HOUSING
	CN16	PGZ00806-04	SMT HOUSING
	CN17	PGZ00806-04	SMT HOUSING
	CN18	PGZ00806-04	SMT HOUSING
	CN19	PGZ00806-05	SMT HOUSING
	CN20	PGZ00806-04	SMT HOUSING
	CN21	PGZ00806-04	SMT HOUSING
	CN22	PGZ00806-05	SMT HOUSING
	CN23	PGZ00806-05	SMT HOUSING
	CN24	PGZ00806-04	SMT HOUSING
	CN25	PGZ00806-05	SMT HOUSING
	CN26	PGZ00806-04	SMT HOUSING
	CN27	PGZ00806-04	SMT HOUSING
	CN28	PGZ00806-04	SMT HOUSING
	CN29	PGZ00806-04	SMT HOUSING
	CN30	PU58844-3R	CAP HOUSING
	CN31	PU58844-3	CAP HOUSING
	CN32	PU58844-5	CAP HOUSING
	CN33	PU58844-7	CAP HOUSING
	CN34	PU58844-9	CAP HOUSING
	CN35	PU58844-10	CAP HOUSING
	CN36	PU58844-6R	CAP HOUSING
	CN37	PU58844-8	CAP HOUSING
	CN38	PU58844-4Y	CAP HOUSING
	CN39	PU58844-4	CAP HOUSING
	CN40	PU58844-5R	CAP HOUSING
	CN41	PU58844-5	CAP HOUSING
	CN42	PU58844-5	CAP HOUSING
	CN43	PU58844-5R	CAP HOUSING
	CN44	PU58844-6R	CAP HOUSING
	CN45	PU58844-2	CAP HOUSING
	CN46	PU58844-3	CAP HOUSING
	CN47	PU58844-6	CAP HOUSING
	CN48	PU58844-4Y	CAP HOUSING
	CN49	PU58844-3	CAP HOUSING
	CN50	PU58844-7	CAP HOUSING
	CN51	PU58844-5	CAP HOUSING
	CN52	PU58844-5Y	CAP HOUSING
	CN53	PU58844-4	CAP HOUSING
	CN55	PU58844-9	CAP HOUSING
	CN56	PU58844-4	CAP HOUSING
	CN57	PU58844-3	CAP HOUSING
	CN58	PU58844-3R	CAP HOUSING

#⚠	REF NO.	PART NO.	PART NAME, DESCRIPTION
	CN59	PGZ00806-04	SMT HOUSING
	CN60	PU58844-4	CAP HOUSING
	CN61	PU58844-9	CAP HOUSING
	CN63	PU58844-4	CAP HOUSING
	CN64	PU58844-6	CAP HOUSING
	CN66	PGZ00420-64	FEMALE CONNECTOR
	CN67	PGZ00420-64	FEMALE CONNECTOR
	CN68	PU58844-4R	CAP HOUSING
	CN69	PGZ00806-04	SMT HOUSING
	CN70	PGZ00806-04	SMT HOUSING
	CN71	PGZ00806-05	SMT HOUSING
	CN72	PGZ00806-04	SMT HOUSING
	CN75	PGZ00806-04	SMT HOUSING
	CN76	PGZ00806-04	SMT HOUSING
	CN77	PGZ00806-04	SMT HOUSING
	CN78	PGZ00806-04	SMT HOUSING
	CN81	PGZ00806-05	SMT HOUSING
	CN103	PU58844-5	CAP HOUSING
	CN104	PU58844-3	CAP HOUSING
	CN105	PU58844-6	CAP HOUSING
	CN107	PU58844-5	CAP HOUSING

****

****
* 29. REGULATOR BOARD ASSEMBLY <17> *
****

#⚠	REF NO.	PART NO.	PART NAME, DESCRIPTION
	PWBA	PGE20155B	REGULATOR PWB ASSY
⚠	IC1	STR2124	IC
⚠	IC2	STR2012A	IC
⚠	IC3	STR2012A	IC
⚠	IC4	UPC7815H	IC
⚠	IC5	NJM7809K	IC
⚠	Q1	2SD973AR	TRANSISTOR
	Q2	2SB793AR	TRANSISTOR
⚠	D1	U05E	DIODE
⚠	D2	U05E	DIODE
⚠	D3	U05E	DIODE
⚠	D4	U05E	DIODE
	D6	RD15EB	ZENER DIODE
	D7	RD11EB3	ZENER DIODE
⚠	DA1	S10VB10	DIODE
⚠	DA2	RB601F	DIODE
	DA3	DAN208	DIODE
	DA4	DAP208	DIODE
	R1	QRD167J-223	RESISTOR
	R3	QRD167J-272	RESISTOR
	R4	QRD167J-102	RESISTOR
	R5	QRD167J-102	RESISTOR
⚠	C1	QFH52AM-224	MM CAPACITOR
	C2	QETA1EM-337	E CAPACITOR
	C3	QCF11HP-223	CAPACITOR
	C4	QCF11HP-223	CAPACITOR
	C5	QETA1EM-337	E CAPACITOR
	C6	QCF11HP-223	CAPACITOR
	C7	QETA1EM-227	E CAPACITOR
	C8	QETA1CM-107	E CAPACITOR
	C9	QCF11HP-223	CAPACITOR
	C10	QETA1CM-107	E CAPACITOR
	C11	QCF11HP-223	CAPACITOR
	C12	QCF11HP-223	CAPACITOR
	C13	QETA1EM-227	E CAPACITOR
⚠	C14	QETA1CM-228	E CAPACITOR
⚠	C15	QFH52AM-224	MM CAPACITOR
⚠	C16	QETA1HM-477	E CAPACITOR
⚠	C17	QETA1VM-337	E CAPACITOR
⚠	C18	QCF11HP-223	CAPACITOR
⚠	C19	QETA1HM-477	E CAPACITOR
	C20	QCF11HP-223	CAPACITOR
	C21	QCF11HP-223	CAPACITOR
	C22	QETA1VM-337	E CAPACITOR
⚠	C23	QETA1VM-477	E CAPACITOR
	C24	QCF11HP-223	CAPACITOR
	C25	QETA1VM-108	E CAPACITOR
	C26	QCF11HP-223	CAPACITOR
	C27	QETA1VM-337	E CAPACITOR
	C28	QCF11HP-223	CAPACITOR
	C29	QETA1EM-107	E CAPACITOR
⚠	C30	QEL71VR-688	E CAPACITOR
⚠	C31	QEL71HR-478	E CAPACITOR
⚠	C32	QFH52AM-224	MM CAPACITOR
	C33	QETA1EM-107	E CAPACITOR
	C34	QETA1EM-106	E CAPACITOR
	C35	QETA1EM-476	E CAPACITOR
	C36	QETA1EM-106	E CAPACITOR
	C37	QCF11HP-223	CAPACITOR
	C38	QETA1EM-107	E CAPACITOR
	C39	QETA1VM-108	E CAPACITOR
⚠	C40	QETA1VM-108	E CAPACITOR
	C41	QCF11HP-223	CAPACITOR
	C42	QCF11HP-223	CAPACITOR
⚠	L1	PGZ00253-241	CHOKE COIL
	L2	PGZ00253-241	CHOKE COIL
	L3	PU56183-330	CHOKE COIL
⚠	L4	PGZ00253-241	CHOKE COIL
	L5	PGZ00253-241	CHOKE COIL
	L6	PU56183-330	CHOKE COIL
⚠	L7	PGZ00253-241	CHOKE COIL
	L8	PGZ00139-331	CHOKE COIL
⚠	L9	PU56183-330	CHOKE COIL
⚠	K1	PU56179	FERITE BEADS
⚠	K2	PU56179	FERITE BEADS
⚠	K3	PU56179	FERITE BEADS
⚠	T1	PGZ00856	TRANSFORMER
⚠	HD1	PU51212	FUSE CLIP,FOR F2-12, X22
⚠	HS1	PGD40223A	HEAT SINK, FOR IC1-3, X3
⚠	HS2	PGD40694	HEAT SINK, FOR IC4,5, X2
⚠	HS3	PGZ00951	HEAT SINK, FOR DA1
	SCW1	SDSP3010Z	SCREW, FOR IC1-3, X6
	SCW2	SDSP3010Z	SCREW, FOR IC4,5, X2
	SCW3	LPSP3014Z	SCREW, FOR DA1
	SPC1	PGZ00151	TR SPACER, FOR IC1-3, X3
	SPC2	PU43092	COLLAR, X2
	TP1	PU54983	TEST PIN, X10(TP1-10)
	CN1	PU43351-4	CAP HOUSING
	CN2	PU43351-4R	CAP HOUSING
	CN3	PU43351-2Y	CAP HOUSING
	CN4	PU43351-8R	CAP HOUSING
	CN5	PU43351-8	CAP HOUSING
	CN6	PU43351-2R	CAP HOUSING
	CN7	PU43351-4	CAP HOUSING
	CN8	PU43351-6R	CAP HOUSING

REGULATOR, CASSETTE HOUSING, OPERATION-1, OPERATION-2

#⚠	REF NO.	PART NO.	PART NAME, DESCRIPTION
	CN9	PU43351-4R	CAP HOUSING
	CN10	PU43351-6	CAP HOUSING
	CN11	PU43351-4	CAP HOUSING
	CN12	PU43351-4	CAP HOUSING
	CN13	PU43351-2	CAP HOUSING
⚠	CN14	PU50597-3	CAP HOUSING
⚠	CN15	PU50597-3	CAP HOUSING
⚠	CN16	PU50597-3	CAP HOUSING
	CN17	PU43351-6	CAP HOUSING
	CN18	PU43351-3	CAP HOUSING
	CN19	PU43351-3R	CAP HOUSING
	CN20	PU43351-2	CAP HOUSING
	CN21	PU43351-2	CAP HOUSING
	CN22	PU43351-4Y	CAP HOUSING
	CN23	PU43351-4Y	CAP HOUSING

****

****
* 30. CASSETTE HOUSING BOARD <18> *
****

	PWB	PGE40002	CASSETTE HOUSING BOARD
	Q1	PT-352V	PHOTO TRANSISTOR
	CN1	PU43351-110	CAP HOUSING

****

****
* 31. OPERATION-1 BOARD ASSEMBLY <19> *
****

	PWBA	PGE10078B1	OPERATION 1 PWB ASSY
	FJ1	PGW0101-30CC556	FLAT JUMPER
	FJ2	PGW0101-90CC553	FLAT JUMPER
	IC1	UPD6345GS	IC
	IC2	UPD6345GS	IC
	IC3	UPD6345GS	IC
	IC4	MN4021BS	IC
	IC5	MN4021BS	IC
	D1	DAN202K	DIODE
	R1	QRSA08J-473YN	RESISTOR
	R5	QRSA08J-473YN	RESISTOR
	R7	QRSA08J-473YN	RESISTOR
	R9	QRSA08J-473YN	RESISTOR
	R11	QRSA08J-473YN	RESISTOR
	R13	QRSA08J-473YN	RESISTOR
	R15	QRSA08J-473YN	RESISTOR
	R18	NRS016J-151NZR	RESISTOR
	R19	QRSA08J-473YN	RESISTOR
	R20	NRS016J-151NZR	RESISTOR
	R23	QRSA08J-473YN	RESISTOR
	R24	NRS016J-151NZR	RESISTOR
	R25	QRSA08J-473YN	RESISTOR
	R26	NRS016J-330NZR	RESISTOR
	R27	QRSA08J-473YN	RESISTOR
	R28	NRS016J-151NZR	RESISTOR
	R29	QRSA08J-473YN	RESISTOR
	R30	NRS016J-151NZR	RESISTOR
	R31	QRSA08J-473YN	RESISTOR
	R32	NRS016J-151NZR	RESISTOR
	R33	QRSA08J-473YN	RESISTOR
	R34	NRS016J-330NZR	RESISTOR
	R35	QRSA08J-473YN	RESISTOR
	R36	NRS016J-151NZR	RESISTOR
	R37	QRSA08J-473YN	RESISTOR
	R38	NRS016J-151NZR	RESISTOR
	R41	QRSA08J-103YN	RESISTOR
	R42	QRSA08J-274YN	RESISTOR
	R43	QRSA08J-103YN	RESISTOR
	R44	QRSA08J-274YN	RESISTOR
	R45	QRSA08J-274YN	RESISTOR
	R46	QRSA08J-682YN	RESISTOR
	R47	QRSA08J-274YN	RESISTOR
	R48	QRSA08J-102YN	RESISTOR
	R56	QRSA08J-103YN	RESISTOR
	R57	QRSA08J-102YN	RESISTOR
	R58	QRSA08J-274YN	RESISTOR
	R59	QRSA08J-102YN	RESISTOR
	R61	QRSA08J-103YN	RESISTOR
	R62	QRSA08J-274YN	RESISTOR
	R63	QRSA08J-473YN	RESISTOR
	C8	QCFA1EZ-104	CAPACITOR
	C10	QCFA1EZ-104	CAPACITOR
	C12	QCFA1EZ-104	CAPACITOR
	C13	QCFA1EZ-104	CAPACITOR
	C14	QCFA1EZ-104	CAPACITOR
	C15	QCFA1EZ-104	CAPACITOR
	C16	QCFA1EZ-104	CAPACITOR
	C17	QCFA1EZ-104	CAPACITOR
	C18	QCFA1EZ-104	CAPACITOR
	C19	QCFA1EZ-104	CAPACITOR
	C20	QCYA1HK-223	CAPACITOR
	C21	QCYA1HK-223	CAPACITOR
	C22	QER40JM-476	E CAPACITOR
	C23	QCYA1HK-223	CAPACITOR
	C24	QCYA1HK-223	CAPACITOR
	SW8	PGZ00762-08	SWITCH,A DUB
	SW10	PGZ00762-04	SWITCH,PREROLL
	SW12	PGZ00762-07	SWITCH, REC
	SW13	PGZ00762	SWITCH, PLAY
	SW14	PGZ00762-03	SWITCH, STILL/PAUSE
	SW15	PGZ00900-02	SWITCH, EJECT
	SW16	PGZ00762-02	SWITCH, REW
	SW17	PGZ00900	SWITCH, STOP
	SW18	PGZ00762-02	SWITCH, FF
	SW19	PGZ00762-04	SWITCH,SEARCH/JOG

****

****
* 32. OPERATION-2 BOARD ASSEMBLY <20> *
****

	PWBA	PGE10078C2	OPERATION 2 PWB ASSY
	FJ2	PGW0101-80CC554	FLAT JAMPER
	FJ3	PGW0101-A0CC555	FLAT JAMPER
	FJ4	PGW0101-C0CC553	FLAT JAMPER
	FJ5	PGW0101-90CC554	FLAT JAMPER
	IC1	UPD554C-058	IC
	IC2	UPD550C-055	IC

#⚠	REF NO.	PART NO.	PART NAME, DESCRIPTION
	IC3	TC4094BP	IC
	IC4	TC5022BP	IC
	IC5	TC5022BP	IC
	IC6	BU4001B	IC
	Q1	DTC124EF	TRANSISTOR
	Q2	DTA124EF	TRANSISTOR
	Q3	DTA114YF	TRANSISTOR
	Q4	DTC124EF	TRANSISTOR
	Q5	2SB739B,C	TRANSISTOR
	D1	1SS133	DIODE
	D2	1SS133	DIODE
	D3	RD7.5EB3	ZENER DIODE
	D4	1SS133	DIODE
	D5	1SS133	DIODE
	D6	1SS133	DIODE
	D7	RD8.2EB2	ZENER DIODE
	R1	QRD161J-221	RESISTOR
	R2	QRD161J-222	RESISTOR
	R3	QRD161J-104	RESISTOR
	R4	QRD161J-332	RESISTOR
	R5	QRD161J-333	RESISTOR
	R6	QRD161J-333	RESISTOR
	R7	QRD161J-105	RESISTOR
	R8	QRD167J-104	RESISTOR
	R9	QRD161J-333	RESISTOR
	R10	QRD161J-105	RESISTOR
	R11	QRD161J-222	RESISTOR
	R12	QRD161J-333	RESISTOR
	R13	QRD161J-333	RESISTOR
	R14	QRD161J-391	RESISTOR
	R15	QRD161J-333	RESISTOR
	R16	QRD161J-222	RESISTOR
	R17	QRD161J-473	RESISTOR
	R18	QRD161J-333	RESISTOR
	R19	QRD161J-473	RESISTOR
	R20	QRD161J-684	RESISTOR
	R21	QRD161J-103	RESISTOR
	R22	QRD161J-104	RESISTOR
	R23	QRD161J-333	RESISTOR
	R24	QRD161J-104	RESISTOR
	R25	QRD161J-471	RESISTOR
	R26	QRD161J-471	RESISTOR
	R27	QRD161J-471	RESISTOR
	R28	QRD161J-471	RESISTOR
	R29	QRD161J-471	RESISTOR
	R30	QRD161J-471	RESISTOR
	R31	QRD161J-471	RESISTOR
	R32	QRD161J-471	RESISTOR
	R33	QRD161J-471	RESISTOR
	R34	QRD161J-471	RESISTOR
	R35	QRD161J-471	RESISTOR
	R36	QRD161J-471	RESISTOR
	R37	QRD161J-471	RESISTOR
	R38	QRD161J-471	RESISTOR
	R39	QRD123J-470S	RESISTOR
	R40	QRD161J-334	RESISTOR
	R41	QRD161J-334	RESISTOR
	R42	QRD161J-334	RESISTOR
	R43	QRD161J-271	RESISTOR
	R44	QRD161J-271	RESISTOR
	R45	QRD161J-271	RESISTOR
	R46	QRD161J-104	RESISTOR
	R47	QRD161J-104	RESISTOR
	RA1	EXB-P84104M	RESISTOR ARRAY
	RA2	EXB-P88334M	RESISTOR ARRAY
	RA3	EXB-P88334M	RESISTOR ARRAY

#⚠	REF NO.	PART NO.	PART NAME, DESCRIPTION
	C1	QER41CM-107	E CAPACITOR
	C2	QETA1CM-227	E CAPACITOR
	C3	PU58948-104	CAPACITOR
⚠	C4	QCS11HJ-471	CAPACITOR
⚠	C5	QCS11HJ-121	CAPACITOR
	C6	PU58948-104	CAPACITOR
⚠	C7	QCS11HJ-471	CAPACITOR
⚠	C8	QCS11HJ-121	CAPACITOR
	C9	QER41CM-106	E CAPACITOR
	C10	QCS11HJ-221	CAPACITOR
	C11	QFN41HJ-562	M CAPACITOR
	C12	QFN41HJ-392	M CAPACITOR
	C13	QFN41HJ-392	M CAPACITOR
	C14	QER41CM-106	E CAPACITOR
	C15	QER41CM-106	E CAPACITOR
	C16	QER41EM-475	E CAPACITOR
	C17	QEPA1HM-105	NP E CAPACITOR
	L1	PU48530-101K	PEAKING COIL
⚠	CF1	PU50224	RESONATOR
⚠	CF2	PU50224	RESONATOR
	T1	PGZ00002	HEATER TRANS
	CN1	PU58844-4	CAP HOUSING
	CN2	PU58844-11	CAP HOUSING
	CN3	PU58844-6	CAP HOUSING

****

****
* 33. TERMINAL BOARD <21> *
****

	PWBA	PGE30174A2	TERMINAL PWB ASSY
	TML1	PGZ00761	TERMINAL
⚠	VA1	PU49624-2	VARISTOR
	CN1	PU58844-2	CAP HOUSING
	CN2	PU58844-4	CAP HOUSING

****

****
* 34. SELECT SWITCH BOARD ASSEMBLY <22> *
****

	PWBA	PGE30174A1	SELECT SWITCH PWB ASSY
	R1	QRD167J-681	RESISTOR
	SW1	PGZ00469	SLIDE SWITCH,AUD.LIMITER
	SW2	PGZ00469	SLIDE SWITCH,DOLBY NR
	SW3	PGZ00469	SLIDE SWITCH,HIFI REC
	SW4	PGZ00469	SLIDE SWITCH,NOR.LINE OUT
	SW5	PGZ00469	SLIDE SWITCH,VIDEO AGC
	SW6	PGZ00469	SLIDE SWITCH,VIDEO DUB
	SW7	PGZ00469	SLIDE SWITCH,Y/C 627 OUT
	SW8	PGZ00470	SLIDE SWITCH,FRAME SERVO
	SW9	PGZ00470	SLIDE SWITCH,SYNC
	SW10	PGZ00470	SLIDE SWITCH,AUTO MODE
	SW11	PGZ00469	SLIDE SWITCH,REMOTE
	CN1	PU58844-7	CAP HOUSING

SELECT SWITCH, VR, JOG, DIRECTION LED, LOADING/UNLOADING SWITCH, 45PIN CONNECTOR

#⚠	REF NO.	PART NO.	PART NAME, DESCRIPTION
	CN2	PU58844-5	CAP HOUSING
	CN3	PU58844-5Y	CAP HOUSING
	CN4	PU58844-4	CAP HOUSING

****

35. VR BOARD ASSEMBLY <23>

PWBA	PGE30127A	VR BOARD ASSY
R1	PGZ00745	V R,VIDEO LEVEL
R2	QRD167J-221	RESISTOR
R3	PGZ00215	V R,TRACKING
R4	PGZ00422	V R,NOR REC LEVEL LCH
R5	QRD167J-0R0	RESISTOR
R6	PGZ00422	V R,NOR REC LEVEL RCH
R7	QRD167J-0R0	RESISTOR
R8	PGZ00422	V R,HIFI REC LEVEL LCH
R9	QRD167J-0R0	RESISTOR
R10	PGZ00422	V R,HIFI REC LEVEL RCH
R11	QRD167J-0R0	RESISTOR
CN1	PU58844-3	CAP HOUSING
CN2	PU58844-3R	CAP HOUSING
CN3	PU58844-4Y	CAP HOUSING
CN4	PU58844-4R	CAP HOUSING
CN5	PU58844-4	CAP HOUSING
CN6	PU58844-4	CAP HOUSING

****

36. JOG BOARD ASSEMBLY <24>

PWBA	PGE30105A-01	JOG BOARD ASSEMBLY
IC1	TC4584BP	IC
R1	QRSA08J-271YN	RESISTOR
R2	QRSA08J-122YN	RESISTOR
R3	QRSA08J-271YN	RESISTOR
R4	QRSA08J-122YN	RESISTOR
R5	QRSA08J-271YN	RESISTOR
R6	QRSA08J-122YN	RESISTOR
R7	QRSA08J-271YN	RESISTOR
R8	QRSA08J-561YN	RESISTOR
R9	QRSA08J-271YN	RESISTOR
R10	QRSA08J-561YN	RESISTOR
C1	QER41EM-475	E CAPACITOR
C2	QCF11HP-103	CAPACITOR
PHS1	GP2L04B	PHOTO SENSOR
PHS2	GP2L04B	PHOTO SENSOR
PHS3	GP2L04B	PHOTO SENSOR
PHS4	GP2L04B	PHOTO SENSOR
PHS5	GP2L04B	PHOTO SENSOR
SPC1	PRD41774-01-01	SPACER
CN1	PU58844-9	CAP HOUSING

****

#⚠	REF NO.	PART NO.	PART NAME, DESCRIPTION

37. DIRECTION LED BOARD ASSEMBLY <26>

PWBA	PGE10078A4	DIRECTION LED BOARD ASSEMBLY
D1	SLB-55MG3F	LE DIODE,REV
D2	SLB-55VR3F	LE DIODE,STILL
D3	SLB-55MG3F	LE DIODE,FWD
R1	QRD167J-271	RESISTOR
R2	QRD167J-271	RESISTOR
R3	QRD167J-271	RESISTOR

****

38. LOADING/UNLOADING SWITCH BOARD <27>

PWB	PGE40069-1-1	LOAD/UNLOADING SWITCH BOARD

****

39. 45PIN CONNECTOR BOARD ASSEMBLY <28>

PWBA	PGE20157A-04	45PIN CONNECTOR BOARD ASSY
FJ1	PGW0103-50CC55C	FLAT JUMPER
IC1	TC4021BP	IC
IC2	TC4021BP	IC
IC3	UPD6345C	IC
Q1	DTC144EK	TRANSISTOR
Q2	DTC144EK	TRANSISTOR
Q3	DTC144EK	TRANSISTOR
D1	DA204K	DIODE
R1	QRSA08J-103YN	RESISTOR
R2	QRSA08J-103YN	RESISTOR
R3	QRSA08J-103YN	RESISTOR
R4	QRSA08J-103YN	RESISTOR
R5	QRSA08J-103YN	RESISTOR
R6	QRSA08J-103YN	RESISTOR
R7	QRSA08J-103YN	RESISTOR
R15	QRSA08J-103YN	RESISTOR
R16	QRSA08J-103YN	RESISTOR
R17	QRSA08J-103YN	RESISTOR
R18	QRSA08J-103YN	RESISTOR
R19	QRSA08J-103YN	RESISTOR
R20	QRSA08J-103YN	RESISTOR
R21	QRSA08J-103YN	RESISTOR
R29	QRD167J-271	RESISTOR
R30	QRD167J-271	RESISTOR
R31	QRD167J-271	RESISTOR
R32	QRD167J-271	RESISTOR
R33	QRD167J-271	RESISTOR
R34	QRD167J-334	RESISTOR
R35	QRD167J-334	RESISTOR
R36	QRD167J-334	RESISTOR

#⚠	REF NO.	PART NO.	PART NAME, DESCRIPTION
	R37	QRD167J-334	RESISTOR
	R38	QRD167J-103	RESISTOR
	R39	QRSA08J-101YN	RESISTOR
	R40	QRSA08J-101YN	RESISTOR
	R41	QRSA08J-101YN	RESISTOR
	R42	QRSA08J-101YN	RESISTOR
	R43	QRSA08J-101YN	RESISTOR
	R44	QRSA08J-101YN	RESISTOR
	R45	QRSA08J-101YN	RESISTOR
	R46	QRSA08J-101YN	RESISTOR
	R47	QRSA08J-101YN	RESISTOR
	R48	QRSA08J-101YN	RESISTOR
	R49	QRSA08J-101YN	RESISTOR
	R50	QRSA08J-101YN	RESISTOR
	R51	QRSA08J-101YN	RESISTOR
	R52	QRSA08J-101YN	RESISTOR
	R53	QRSA08J-102YN	RESISTOR
	R54	QRSA08J-102YN	RESISTOR
	R55	QRSA08J-102YN	RESISTOR
	R56	QRSA08J-102YN	RESISTOR
	R57	QRSA08J-102YN	RESISTOR
	R58	QRSA08J-102YN	RESISTOR
	R59	QRSA08J-102YN	RESISTOR
	R60	QRSA08J-102YN	RESISTOR
	R61	QRSA08J-102YN	RESISTOR
	R62	QRSA08J-102YN	RESISTOR
	R63	QRSA08J-102YN	RESISTOR
	R64	QRSA08J-102YN	RESISTOR
	R65	QRSA08J-101YN	RESISTOR
	RA1	EXB-P87104M	RESISTOR ARRAY
	RA2	EXB-P87104M	RESISTOR ARRAY
	C1	QFN31HJ-103	M CAPACITOR
	C2	QFN31HJ-103	M CAPACITOR
	C3	QFN31HJ-103	M CAPACITOR
	C4	QFN31HJ-334	M CAPACITOR
	C5	QETC1CM-227	E CAPACITOR
	C7	QCF11HP-103	CAPACITOR
	C8	QCF11HP-103	CAPACITOR
	C9	QCF11HP-103	CAPACITOR
	C10	QCF11HP-103	CAPACITOR
	C11	QCF11HP-103	CAPACITOR
	C12	QCF11HP-103	CAPACITOR
	C13	QCF11HP-103	CAPACITOR
	C14	QCF11HP-103	CAPACITOR
	C15	QCF11HP-103	CAPACITOR
	C16	QCF11HP-103	CAPACITOR
	C17	QCF11HP-103	CAPACITOR
	C18	QCS11HJ-121	CAPACITOR
	C19	QCS11HJ-121	CAPACITOR
	C20	QCS11HJ-121	CAPACITOR
	SW1	QSS1A12-L02	SLIDE SWITCH
⚠	K1	PGZ00354	FERRITE BEADS
	BKT1	PRD42225-01-02	45PIN BRACKET
	SCW1	SPSP2608Z	SCREW, X2
⚠	VA1	PGZ00753	CHIP VARISTOR
⚠	VA2	PGZ00753	CHIP VARISTOR
⚠	VA3	PGZ00753	CHIP VARISTOR
⚠	VA4	PGZ00753	CHIP VARISTOR
⚠	VA5	PGZ00753	CHIP VARISTOR
⚠	VA6	PGZ00753	CHIP VARISTOR
⚠	VA7	PGZ00753	CHIP VARISTOR
⚠	VA8	PGZ00753	CHIP VARISTOR
⚠	VA9	PGZ00753	CHIP VARISTOR

#⚠	REF NO.	PART NO.	PART NAME, DESCRIPTION
⚠	VA10	PGZ00753	CHIP VARISTOR
⚠	VA11	PGZ00753	CHIP VARISTOR
⚠	VA12	PGZ00753	CHIP VARISTOR
⚠	VA13	PGZ00753	CHIP VARISTOR
⚠	VA14	PGZ00753	CHIP VARISTOR
⚠	VA15	PGZ00753	CHIP VARISTOR
⚠	VA16	PGZ00753	CHIP VARISTOR
⚠	VA17	PGZ00753	CHIP VARISTOR
⚠	VA18	PGZ00753	CHIP VARISTOR
⚠	VA19	PGZ00753	CHIP VARISTOR
⚠	VA20	PGZ00753	CHIP VARISTOR
⚠	VA21	PGZ00753	CHIP VARISTOR
⚠	VA22	PGZ00753	CHIP VARISTOR
⚠	VA23	PGZ00753	CHIP VARISTOR
⚠	VA24	PGZ00753	CHIP VARISTOR
⚠	VA25	PGZ00753	CHIP VARISTOR
⚠	VA26	PGZ00753	CHIP VARISTOR
⚠	VA27	PGZ00753	CHIP VARISTOR
⚠	VA28	PGZ00753	CHIP VARISTOR
⚠	VA29	PGZ00753	CHIP VARISTOR
⚠	VA30	PGZ00753	CHIP VARISTOR
⚠	VA31	PGZ00753	CHIP VARISTOR
⚠	VA32	PGZ00753	CHIP VARISTOR
⚠	VA33	PGZ00753	CHIP VARISTOR
⚠	VA34	PGZ00753	CHIP VARISTOR
⚠	VA35	PGZ00753	CHIP VARISTOR
⚠	VA36	PGZ00753	CHIP VARISTOR
⚠	VA37	PGZ00753	CHIP VARISTOR
⚠	VA38	PGZ00753	CHIP VARISTOR
⚠	VA39	PGZ00753	CHIP VARISTOR
⚠	VA40	PGZ00753	CHIP VARISTOR
⚠	VA41	PGZ00753	CHIP VARISTOR
⚠	VA42	PGZ00753	CHIP VARISTOR
	CN1	PU58844-107	CAP HOUSING
	CN2	PU58844-109	CAP HOUSING
	CN3	PU58844-105	CAP HOUSING
	CN4	PU58844-104	CAP HOUSING
	CN5	PU58844-103	CAP HOUSING
	CN6	PU44246-9-10	45 PIN CONNECTOR

****

****
* 40. REAR BOARD ASSEMBLY <29> *
****

	PWBA	PGE20164D-04	REAR PWB ASSY
	IC1	TK15021	IC
	IC2	TK15021	IC
	IC3	M5220P	IC
	IC4	TC4066BP	IC
	IC5	M5220P	IC
	IC6	TK15021	IC
	IC7	TK15021	IC
	IC9	M5220P	IC
	Q1	2SD1423(S)	TRANSISTOR
	Q2	2SD601A	TRANSISTOR
	Q3	2SD601A	TRANSISTOR
	Q4	2SD1423(S)	TRANSISTOR
	Q5	2SD601A	TRANSISTOR
	Q6	2SD1423(S)	TRANSISTOR
	Q7	2SD601A	TRANSISTOR
	Q8	2SD1423(S)	TRANSISTOR
	Q9	2SD1423(S)	TRANSISTOR
	Q10	2SD1423(S)	TRANSISTOR

REAR

#⚠	REF NO.	PART NO.	PART NAME, DESCRIPTION
	Q11	2SD1423(S)	TRANSISTOR
	Q12	DTA124EK	TRANSISTOR
	Q14	DTA124EK	TRANSISTOR
	Q15	DTA124EK	TRANSISTOR
	Q16	DTA124EK	TRANSISTOR
	Q18	DTA124EK	TRANSISTOR
	Q19	2SD1423(S)	TRANSISTOR
	Q20	2SD1423(S)	TRANSISTOR
	Q21	DTA124EK	TRANSISTOR
	Q22	2SD1423(S)	TRANSISTOR
	Q23	2SD1423(S)	TRANSISTOR
	Q24	DTA124EK	TRANSISTOR
	Q25	DTA124EK	TRANSISTOR
	Q26	2SD1423(S)	TRANSISTOR
	Q27	DTA124EK	TRANSISTOR
	D1	0A90	DIODE
	D2	RD2.7EB	DIODE
	D3	0A90	DIODE
	D4	0A90	DIODE
	D5	RD2.7EB	DIODE
	D6	0A90	DIODE
	D7	1SS133	DIODE
	D8	1SS133	DIODE
	D9	DAN202K	DIODE
	D10	DAN202K	DIODE
	D13	DAP202K	DIODE
	R1	NRS016J-151NZR	RESISTOR
	R2	NRS016J-151NZR	RESISTOR
	R3	NRS016J-151NZR	RESISTOR
	R4	QRSA08J-563YN	RESISTOR
	R5	QRSA08J-223YN	RESISTOR
	R6	QRSA08J-102YN	RESISTOR
	R8	QRSA08J-102YN	RESISTOR
	R9	QRSA08J-332YN	RESISTOR
	R10	QRSA08J-331YN	RESISTOR
	R11	QRSA08J-563YN	RESISTOR
	R12	QRSA08J-223YN	RESISTOR
	R13	QRSA08J-331YN	RESISTOR
	R14	QRSA08J-102YN	RESISTOR
	R16	QRSA08J-102YN	RESISTOR
	R17	QRSA08J-332YN	RESISTOR
	R18	QRSA08J-332YN	RESISTOR
	R19	QRSA08J-683YN	RESISTOR
	R20	QRSA08J-102YN	RESISTOR
	R21	QRSA08J-103YN	RESISTOR
	R22	QRSA08J-332YN	RESISTOR
	R23	QRSA08J-103YN	RESISTOR
	R24	QRSA08J-222YN	RESISTOR
	R25	QRSA08J-332YN	RESISTOR
	R26	QRSA08J-683YN	RESISTOR
	R27	QRSA08J-102YN	RESISTOR
	R28	QRSA08J-104YN	RESISTOR
	R29	QRSA08J-104YN	RESISTOR
	R30	QRSA08J-104YN	RESISTOR
	R31	QRSA08J-104YN	RESISTOR
	R32	QRSA08J-102YN	RESISTOR
	R33	QRSA08J-683YN	RESISTOR
	R34	QRSA08J-222YN	RESISTOR
	R36	QRSA08J-102YN	RESISTOR
	R37	QRSA08J-683YN	RESISTOR
	R38	QRSA08J-332YN	RESISTOR
	R39	QRSA08J-683YN	RESISTOR
	R40	QRSA08J-332YN	RESISTOR
	R41	QRSA08J-102YN	RESISTOR
	R42	QRSA08J-333YN	RESISTOR

#⚠	REF NO.	PART NO.	PART NAME, DESCRIPTION
	R43	QRSA08J-333YN	RESISTOR
	R44	QRSA08J-333YN	RESISTOR
	R45	QRSA08J-472YN	RESISTOR
	R46	QRSA08J-472YN	RESISTOR
	R47	QRSA08J-273YN	RESISTOR
	R48	QRSA08J-333YN	RESISTOR
	R49	QRSA08J-333YN	RESISTOR
	R50	QRSA08J-333YN	RESISTOR
	R51	QRSA08J-333YN	RESISTOR
	R52	QRSA08J-104YN	RESISTOR
	R53	QRSA08J-104YN	RESISTOR
	R54	QRSA08J-331YN	RESISTOR
	R55	QRSA08J-331YN	RESISTOR
	R56	QRSA08J-0R0Y	RESISTOR
	R57	QRSA08J-0R0Y	RESISTOR
	R58	QRSA08J-332YN	RESISTOR
	R59	QRSA08J-331YN	RESISTOR
	R60	QRSA08J-332YN	RESISTOR
	R61	QRSA08J-331YN	RESISTOR
	R62	QRSA08J-473YN	RESISTOR
	R63	QRSA08J-473YN	RESISTOR
	R64	QRSA08J-333YN	RESISTOR
	R65	QRSA08J-223YN	RESISTOR
	R66	QRSA08J-223YN	RESISTOR
	R67	QRSA08J-154YN	RESISTOR
	R68	QRSA08J-473YN	RESISTOR
	R69	QRSA08J-473YN	RESISTOR
	R70	QRSA08J-822YN	RESISTOR
	R71	QRSA08J-473YN	RESISTOR
	R72	QRSA08J-102YN	RESISTOR
	R73	QRSA08J-154YN	RESISTOR
	R75	QRSA08J-683YN	RESISTOR
	R76	QRSA08J-683YN	RESISTOR
	R77	QRSA08J-332YN	RESISTOR
	R78	QRSA08J-332YN	RESISTOR
	R79	QRSA08J-822YN	RESISTOR
	R80	QRSA08J-222YN	RESISTOR
	R81	QRSA08J-103YN	RESISTOR
	R82	QRSA08J-683YN	RESISTOR
	R83	NRS016J-151NZR	RESISTOR
	R88	QRSA08J-102YN	RESISTOR
	R89	QRSA08J-332YN	RESISTOR
	R90	QRSA08J-222YN	RESISTOR
	R91	NRS016J-151NZR	RESISTOR
	R92	QRSA08J-222YN	RESISTOR
	R93	QRSA08J-332YN	RESISTOR
	R94	QRSA08J-102YN	RESISTOR
	R98	QRSA08J-683YN	RESISTOR
	R99	QRSA08J-103YN	RESISTOR
	R100	QRSA08J-222YN	RESISTOR
	R101	QRSA08J-822YN	RESISTOR
	R102	QRSA08J-104YN	RESISTOR
	R103	QRSA08J-104YN	RESISTOR
	R104	QRSA08J-822YN	RESISTOR
	R105	QRSA08J-222YN	RESISTOR
	R106	QRSA08J-103YN	RESISTOR
	R107	QRSA08J-103YN	RESISTOR
	R108	QRSA08J-683YN	RESISTOR
	R109	QRSA08J-473YN	RESISTOR
	R110	QRSA08J-473YN	RESISTOR
	R111	QRSA08J-103YN	RESISTOR
	R112	QRSA08J-223YN	RESISTOR
	R113	QRSA08J-102YN	RESISTOR
	R114	QRSA08J-683YN	RESISTOR
	R115	QRSA08J-222YN	RESISTOR
	R116	QRSA08J-222YN	RESISTOR
	R117	QRSA08J-683YN	RESISTOR

#⚠	REF NO.	PART NO.	PART NAME, DESCRIPTION
	R118	QRSA08J-102YN	RESISTOR
	R119	QRSA08J-223YN	RESISTOR
	R120	QRSA08J-103YN	RESISTOR
	R121	QRSA08J-473YN	RESISTOR
	R122	QRSA08J-683YN	RESISTOR
	R123	QRSA08J-103YN	RESISTOR
	R124	QRSA08J-222YN	RESISTOR
	R125	QRSA08J-822YN	RESISTOR
	R126	QRSA08J-104YN	RESISTOR
	R127	QRSA08J-104YN	RESISTOR
	R128	QRSA08J-473YN	RESISTOR
	R129	QRSA08J-473YN	RESISTOR
	R130	QRSA08J-822YN	RESISTOR
	R131	QRSA08J-333YN	RESISTOR
	R132	QRSA08J-473YN	RESISTOR
	R133	QRSA08J-473YN	RESISTOR
	R134	QRSA08J-333YN	RESISTOR
	R135	QRSA08J-102YN	RESISTOR
	R136	QRSA08J-154YN	RESISTOR
	R137	QRSA08J-822YN	RESISTOR
	R138	QRSA08J-223YN	RESISTOR
	R139	QRSA08J-274YN	RESISTOR
	R140	QRSA08J-332YN	RESISTOR
	R141	QRSA08J-273YN	RESISTOR
	R142	QRSA08J-473YN	RESISTOR
	R143	QRSA08J-101YN	RESISTOR
	R144	QRSA08J-101YN	RESISTOR
	R145	QRSA08J-152YN	RESISTOR
	R146	QRSA08J-152YN	RESISTOR
	R147	QRSA08J-822YN	RESISTOR
	R148	QRSA08J-822YN	RESISTOR
	R161	QRSA08J-333YN	RESISTOR
	R162	QRSA08J-333YN	RESISTOR
	R301	QRSA08J-0R0Y	RESISTOR(R301-315), X14
	C1	QER41CM-106	E CAPACITOR
	C2	QER41EM-475	E CAPACITOR
	C3	QER41EM-106	E CAPACITOR
	C4	QER41EM-475	E CAPACITOR
	C5	QER41CM-226	E CAPACITOR
	C6	QER41EM-475	E CAPACITOR
	C7	QER41CM-106	E CAPACITOR
	C8	QER41CM-106	E CAPACITOR
	C9	QER41EM-475	E CAPACITOR
	C10	QER41CM-106	E CAPACITOR
	C11	QER41CM-106	E CAPACITOR
	C12	QER41CM-106	E CAPACITOR
	C13	QER41CM-107	E CAPACITOR
	C14	QER41CM-106	E CAPACITOR
	C15	QER41CM-226	E CAPACITOR
	C16	QER41CM-226	E CAPACITOR
	C17	QCTA1CH-100	CAPACITOR
	C18	QCTA1CH-100	CAPACITOR
	C19	QER41CM-107	E CAPACITOR
	C20	QEPC1CM-106	NP E CAPACITOR
	C21	QEPC1CM-106	NP E CAPACITOR
	C22	QEPC1CM-106	NP E CAPACITOR
	C23	QER41CM-107	E CAPACITOR
	C24	QEZ0117-475	E CAPACITOR
	C25	QEZ0117-475	E CAPACITOR
	C26	QER41CM-107	E CAPACITOR
	C27	QER41CM-107	E CAPACITOR
	C28	QER61CM-106	E CAPACITOR
	C29	QER61CM-106	E CAPACITOR
	C30	QER61CM-106	E CAPACITOR
	C31	QER61CM-106	E CAPACITOR

#⚠	REF NO.	PART NO.	PART NAME, DESCRIPTION
	C32	QEZ0116-226	E CAPACITOR
	C33	QEZ0116-226	E CAPACITOR
	C34	QEZ0117-475	E CAPACITOR
	C35	QEZ0117-475	E CAPACITOR
	C36	QEZ0117-475	E CAPACITOR
	C37	QER41CM-107	E CAPACITOR
	C38	QEZ0117-475	E CAPACITOR
	C39	QEZ0117-475	E CAPACITOR
	C40	QEZ0116-106	E CAPACITOR
	C41	QEZ0116-226	E CAPACITOR
	C42	QEZ0117-475	E CAPACITOR
	C48	QEZ0116-226	E CAPACITOR
	C49	QCTA1CH-100	CAPACITOR
	C50	QER61CM-106	E CAPACITOR
	C51	QEZ0116-226	E CAPACITOR
	C52	QEZ0117-475	E CAPACITOR
	C53	QEZ0117-475	E CAPACITOR
	C54	QER61CM-106	E CAPACITOR
	C55	QEZ0117-475	E CAPACITOR
	C56	QEZ0116-226	E CAPACITOR
	C57	QER41CM-107	E CAPACITOR
	C58	QER61CM-106	E CAPACITOR
	C59	QER61CM-106	E CAPACITOR
	C60	QEZ0116-226	E CAPACITOR
	C61	QEZ0116-106	E CAPACITOR
	C62	QCTA1CH-100	CAPACITOR
	C63	QEZ0116-226	E CAPACITOR
	C64	QER41CM-107	E CAPACITOR
	C65	QER61CM-106	E CAPACITOR
	C66	QER61CM-106	E CAPACITOR
	C67	QEZ0116-226	E CAPACITOR
	C68	QEZ0117-475	E CAPACITOR
	C69	QFN31HJ-472	M CAPACITOR
	C70	QFN31HJ-472	M CAPACITOR
	C301	QCYA1HK-223	CAPACITOR
	C302	QCYA1HK-223	CAPACITOR
	C303	QCYA1HK-223	CAPACITOR
	C304	QCYA1HK-223	CAPACITOR
	C305	QCYA1HK-223	CAPACITOR
	C306	QCYA1HK-561	CAPACITOR
	C307	QCYA1HK-561	CAPACITOR
	SW1	PGZ00469	SLIDE SWITCH,TIME CODE
	SW2	PGZ00743-03	SLIDE SW,AUD INPUT SELECT
	SW3	PGZ00470	SLIDE SWITCH,TIMER
	SW4	QSS1F12-L02	SLIDE SWITCH,TBC
	HD11	PU44398	FUSE SOCKET,X2
	VA301	PU49624-2	VARISTOR
	CN1	PU59513-4	CAP HOUSING
	CN2	PU59513-5Y	CAP HOUSING
	CN3	PU59513-4Y	CAP HOUSING
	CN4	PU59513-4R	CAP HOUSING
	CN5	PU59513-3	CAP HOUSING
	CN6	PU58844-104R	CAP HOUSING
	CN7	PU59513-4R	CAP HOUSING
	CN8	PU59513-3	CAP HOUSING
	CN9	PU59513-5R	CAP HOUSING
	CN10	PU59513-5	CAP HOUSING
	CN11	PU59513-3Y	CAP HOUSING
	CN14	PU58844-104Y	CAP HOUSING
	CN16	PU58844-107	CAP HOUSING
	CN17	PU59513-4Y	CAP HOUSING
	CN18	PU58844-104	CAP HOUSING
	CN19	PU59513-3R	CAP HOUSING
	CN20	PU59513-4R	CAP HOUSING

REAR, FRONT LED, COUNTER, A/C HEAD, COLOR FRAME SERVO

#⚠	REF NO.	PART NO.	PART NAME, DESCRIPTION
	CN22	PU58844-104	CAP HOUSING
	CN23	PU58844-2	CAP HOUSING
	CN24	PU58844-2	CAP HOUSING
	CN25	PU59513-3	CAP HOUSING

****

****
* 41. FRONT LED BOARD ASSEMBLY <30> *
****

	PWBA	PGE40203A-02	FRONT LED BOARD ASSY
	D1	GL-9NG2	LE DIODE,HIFI
	D2	GL-9NG2	LE DIODE,NR
	D3	GL-9NG2	LE DIODE,TC
	D5	GL-9HY26	LE DIODE,CTL PULSE
	D6	GL-9NG2	LE DIODE,SERVO LOCK
	R1	QRD167J-681	RESISTOR
	SW1	PGZ00742	SLIDE SW,AUD MONITOR
	SW2	PGZ00469	SLIDE SW,AUD MONITOR
	SW3	PGZ00470	SLIDE SW,VIDEO INPUT
	SW4	PGZ00469	SLIDE SW,REC MODE
	HD1	PQ40795-5-2	LED HOLDER(FOR D1-6), X5
	SPC1	PU52890	LED SPACER(FOR D1-6), X5

****

****
* 42. COUNTER BOARD ASSEMBLY <31> *
****

	PWBA	PGE10078A3-01	COUNTOR BOARD ASSEMBLY
	D1	LA-301YL	LED DISPLAY,WARNING
	D2	LA-301YL	LED DISPLAY,WARNING
	D3	SLV-31MC3F	LE DIODE,S-VHS
	D4	SLV-31MC3F	LE DIODE,S-VHS
	D5	SLV-31MC3F	LE DIODE,S-VHS
	D6	GL-9PR2	LE DIODE, INVALID
	D7	GL-9PR2	LE DIODE, AUTO OFF
	R1	QRD121J-820S	RESISTOR
	R2	QRD161J-102	RESISTOR
	R3	QRD161J-102	RESISTOR
	SW1	PGZ00029	PUSH SWITCH, RESET
	FDP1	PU50660-2	FLUORESCENT DISPLAY PANEL
	CL1	PU49485-3	WIRE CLAMP
	HD1	PU50515	DISPLAY HOLDER, FOR FDP1
	HD2	PQ31858	SHADE, FOR D3-5
	HD3	PQ40795-5-2	LED HOLDER,FOR D6,D7, X2
	SCW1	SDSA2608Z	SCREW, FOR HD1, X2
	SKT1	PGZ00803-05	SOCKET, FOR D1,D7, X4
	SPC1	PU52427	LED SPACER,FOR D6,D7, X2

****

#⚠	REF NO.	PART NO.	PART NAME, DESCRIPTION

****
* 43. A/C HEAD BOARD <35> *
****

	PWB	PGE40231	A/C HEAD BOARD
	R1	QRD167J-100	RESISTOR
	R2	QRD167J-100	RESISTOR
	CN1	PU49215-104	CAP HOUSING

****

****
* 44. COLOR FRAME SERVO BOARD ASSEMBLY <36> *
****

	PWBA	PGE20248A	C F SERVO PWB ASSY
	IC1	BA401	IC
	IC2	TC4015BP	IC
	IC3	TC4013BP	IC
	IC4	BU4538B	IC
	IC5	TC4017BP	IC
	IC6	TC4015BP	IC
	IC7	TC74HC4040P	IC
	IC8	TC4040BP	IC
	IC9	TC4001BP	IC
	IC10	BU4584B	IC
	IC11	TC4071BP	IC
	IC12	TC74HC04P	IC
	Q1	DTA144EF	TRANSISTOR
	Q2	DTA144EF	TRANSISTOR
	Q4	DTA144EF	TRANSISTOR
	Q5	DTC144EF	TRANSISTOR
	Q6	DTC144EF	TRANSISTOR
	Q7	2SD636Q	TRANSISTOR
	Q8	2SB641Q	TRANSISTOR
	Q9	DTC144EF	TRANSISTOR
	D1	1SS133	DIODE
	D2	1SS133	DIODE
	D4	1SS133	DIODE
	D6	1SS133	DIODE
	D7	1SS133	DIODE
	R1	QRD161J-224	RESISTOR
	R2	QRD161J-224	RESISTOR
	R3	QRD161J-222	RESISTOR
	R4	QRD161J-222	RESISTOR
	R5	QRD161J-102	RESISTOR
	R6	QRD161J-103	RESISTOR
	R7	QRD161J-103	RESISTOR
	R8	QRV187F-3322	CMF RESISTOR
	R9	QRD161J-103	RESISTOR
	R10	QRD161J-223	RESISTOR
	R11	QRD161J-222	RESISTOR
	R12	QRD161J-224	RESISTOR
	R13	QRD161J-224	RESISTOR
	R14	QRD161J-224	RESISTOR
	R15	QRD161J-224	RESISTOR
	R16	QRD161J-224	RESISTOR
	R17	QRD161J-222	RESISTOR
	R18	QRD161J-823	RESISTOR
	R19	QRD161J-105	RESISTOR
	R20	QRD161J-222	RESISTOR

#⚠	REF NO.	PART NO.	PART NAME, DESCRIPTION
	R21	QRD161J-222	RESISTOR
	R22	QRD161J-820	RESISTOR
	R23	QRD161J-472	RESISTOR
	R24	QRD161J-104	RESISTOR
	R25	QRD161J-153	RESISTOR
	R26	QRD161J-102	RESISTOR
	R27	QRD161J-474	RESISTOR
	R28	QRD161J-153	RESISTOR
	R29	QRD161J-681	RESISTOR
	R30	QRD161J-472	RESISTOR
	C1	QEN61EM-475	NP E CAPACITOR
	C2	QETC1CM-107	E CAPACITOR
	C3	QCF31HP-223	CAPACITOR
	C4	QETC1HM-105	E CAPACITOR
	C5	QFP42AF-102M	PP CAPACITOR
	C6	QCS31HJ-151	CAPACITOR
	C7	QFN31HJ-103	M CAPACITOR
	C8	QCF31HP-223	CAPACITOR
	C9	QETC1CM-107	E CAPACITOR
	C10	QETC1HM-105	E CAPACITOR
	C11	QCS31HJ-330	CAPACITOR
	C12	QCS31HJ-330	CAPACITOR
	C13	QCF31HP-223	CAPACITOR
	C14	QETC1CM-107	E CAPACITOR
	C15	QFN31HJ-103	M CAPACITOR
	C16	QCF31HP-223	CAPACITOR
	C17	QCF31HP-223	CAPACITOR
	C18	QCF31HP-223	CAPACITOR
	C19	QCF31HP-223	CAPACITOR
	C20	QCF31HP-223	CAPACITOR
	C21	QCF31HP-223	CAPACITOR
	C22	QCF31HP-223	CAPACITOR
	C23	QCF31HP-223	CAPACITOR
	C24	QCF31HP-223	CAPACITOR
	C25	QCF31HP-223	CAPACITOR
	C26	QCF31HP-223	CAPACITOR
	L1	PU48530-221K	COIL
	L2	PU48530-221K	COIL
	L3	PU48530-221K	COIL
⚠	CF1	PU55407	RESONATOR
	TP1	PU54983	TEST PIN, X6
	CN1	PGZ00421-64	MALE CONNECTOR

****

****
* 45. (RF) 2H DELAY BOARD ASSEMBLY <37> *
****

	PWBA	PGE20213A	RF 2H DL PWB ASSY
	IC1	AN607P	IC
	IC2	AN607P	IC
	IC3	TA7348P	IC
	Q1	2SC2647C	TRANSISTOR
	Q2	2SC2647C	TRANSISTOR
	Q3	2SC2647C	TRANSISTOR
	Q4	2SC2647C	TRANSISTOR
	Q5	DTC144EF	TRANSISTOR
	Q6	2SC2647C	TRANSISTOR
	Q7	2SC2647C	TRANSISTOR
	Q8	2SB641Q	TRANSISTOR
	D1	1SS133	DIODE
	D2	1SS133	DIODE
	D3	1SS133	DIODE
	D4	1SS133	DIODE
	R1	QRD161J-103	RESISTOR
	R2	QRD161J-123	RESISTOR
	R3	QRD161J-222	RESISTOR
	R4	QRD161J-391	RESISTOR
	R5	QRD161J-560	RESISTOR
	R6	PU55509-331	V RESISTOR,S RF LEVEL
	R7	QRD161J-101	RESISTOR
	R8	QRD161J-392	RESISTOR
	R9	QRD161J-101	RESISTOR
	R10	QRD161J-222	RESISTOR
	R11	QRD161J-103	RESISTOR
	R12	QRD161J-123	RESISTOR
	R13	QRD161J-222	RESISTOR
	R14	QRD161J-391	RESISTOR
	R15	QRD161J-560	RESISTOR
	R16	PU55509-331	V R,NORMAL RF LEVEL
	R17	QRD161J-101	RESISTOR
	R18	QRD161J-392	RESISTOR
	R19	QRD161J-101	RESISTOR
	R20	QRD161J-222	RESISTOR
	R21	QRD161J-223	RESISTOR
	R22	QRD161J-103	RESISTOR
	R23	QRD161J-181	RESISTOR
	R24	QRD161J-333	RESISTOR
	R25	QRD161J-123	RESISTOR
	R26	QRD161J-222	RESISTOR
	R27	QRD161J-181	RESISTOR
	R28	QRD161J-181	RESISTOR
	R29	QRD161J-821	RESISTOR
	R30	QRD161J-271	RESISTOR
	R31	QRD161J-122	RESISTOR
	R32	QRD161J-122	RESISTOR
	R33	QRD161J-750	RESISTOR
	R34	QRD161J-223	RESISTOR
	C1	QFN31HK-103	M CAPACITOR
	C2	QFN31HK-103	M CAPACITOR
	C3	QFN31HK-103	M CAPACITOR
	C4	QCF31HP-223	CAPACITOR
	C5	QET61CM-476	E CAPACITOR
	C6	QFN31HK-103	M CAPACITOR
	C7	QFN31HK-103	M CAPACITOR
	C8	QFN31HK-103	M CAPACITOR
	C9	QCF31HP-223	CAPACITOR
	C10	QET61CM-476	E CAPACITOR
	C11	QET61CM-107	E CAPACITOR
	C12	QCF31HP-223	CAPACITOR
	C13	QFN31HK-103	M CAPACITOR
	C14	QFN31HK-103	M CAPACITOR
	C15	QFN31HK-103	M CAPACITOR
	C16	QFN31HK-103	M CAPACITOR
	C17	QFN31HK-103	M CAPACITOR
	C18	QFN31HK-103	M CAPACITOR
	C19	QCF31HP-223	CAPACITOR
	C20	QET61CM-476	E CAPACITOR
	L1	PU48530-4R7J	COIL
	L2	PU48530-4R7J	COIL
	L3	PU48530-221J	COIL
	L4	PU48530-100J	COIL
	L5	PU48530-100J	COIL
	L6	PU48530-221J	COIL
	L7	PU48530-221J	COIL
	DL1	PGZ00975	DELAY LINE

(RF) 2H DELAY, PICK OUT DETECTOR, CONNECTOR, SERVO-1 SUB

#⚠	REF NO.	PART NO.	PART NAME, DESCRIPTION
	DL2	PGZ00975-02	DELAY LINE
	TP1	PU54983	TEST PIN, X2(TP1,2)
	CN1	PGZ00421-64	MALE CONNECTOR
⚠	CP1	ICP-F10	CIRCUIT PROTECTOR

46. PICK OUT DETECTOR BOARD <38>

	PWB	PGE40012	PICK OUT DETECTOR BOARD
	PHS1	PU50576	PHOTO INTERRUPTER
	BKT1	PRD40007-1-1	BRACKET
	SCW1	SBST3008Z	TAPPING SCREW

47. CONNECTOR BOARD ASSEMBLY <39>

	PWBA	PGE10081A-01	CONNECTOR BOARD ASSY
	R1	NRS016J-151NR	RESISTOR
	R2	QVZ3513-682	V R,HIFI LEVEL METER LCH
	R3	QVZ3513-682	V R,HIFI LEVEL METER RCH
	R4	NRS016J-151NR	RESISTOR
	R5	NRS016J-151NR	RESISTOR
	CN1	PGZ00806-05	SMT HOUSING
	CN2	PGZ00806-04	SMT HOUSING
	CN3	PGZ00806-04	SMT HOUSING
	CN4	PGZ00806-04	SMT HOUSING
	CN5	PGZ00806-04	SMT HOUSING

48. SERVO-1 SUB BOARD ASSEMBLY <40>

	PWBA	PGE20162B	SERVO-1 SUB PWB ASSY
	IC1	NJM2068MD	IC
	IC2	BA6993F	IC
	IC3	NJM2068MD	IC
	IC4	MN4011BS	IC
	IC5	MN4081BS	IC
	IC6	MN4069UBS	IC
	IC7	MN4053BS	IC
	IC8	TC4S01F	IC
	IC9	TC4S81F	IC
	IC10	TC4S71F	IC
	IC11	TC4S71F	IC
	IC101	BA833F	IC
	IC102	BA10358F	IC
	IC103	MN4013BS	IC
	IC104	SM6430C	IC

#⚠	REF NO.	PART NO.	PART NAME, DESCRIPTION
	Q1	DTC144EK	TRANSISTOR
	Q2	DTA144EK	TRANSISTOR
	Q3	DTC144EK	TRANSISTOR
	Q4	2SB709	TRANSISTOR
	Q5	DTC144EK	TRANSISTOR
	Q6	DTC144EK	TRANSISTOR
	Q7	DTA144EK	TRANSISTOR
	Q8	DTC144EK	TRANSISTOR
	Q9	DTC144EK	TRANSISTOR
	Q10	2SD601	TRANSISTOR
	Q11	2SD601	TRANSISTOR
	Q101	DTA144EK	TRANSISTOR
	Q104	DTC144EK	TRANSISTOR
	Q105	2SK208(O)	FE TRANSISTOR
	Q106	IMZ2	TRANSISTOR
	Q107	IMZ2	TRANSISTOR
	D1	DAN202K	DIODE
	D2	DAN202K	DIODE
	D3	DAN202K	DIODE
	D4	RB400D	DIODE
	D5	RB400D	DIODE
	D6	DAN202K	DIODE
	D7	DAN202K	DIODE
	D8	DAN202K	DIODE
	D101	1SS133	DIODE
	DA1	DA204K	DIODE
	DA2	DAP202K	DIODE
	DA101	DA204K	DIODE
	DA102	DA204K	DIODE
	R1	QRSA08J-182YN	RESISTOR
	R2	QRSA08J-561YN	RESISTOR
	R3	QRSA08J-102YN	RESISTOR
	R4	QRSA08J-102YN	RESISTOR
	R5	QRSA08J-104YN	RESISTOR
	R6	QRSA08J-105YN	RESISTOR
	R7	QRSA08J-332YN	RESISTOR
	R8	QRSA08J-122YN	RESISTOR
	R9	QRSA08J-822YN	RESISTOR
	R10	QRSA08J-474YN	RESISTOR
	R11	QRSA08J-105YN	RESISTOR
	R12	QRSA08J-102YN	RESISTOR
	R13	QRSA08J-103YN	RESISTOR
	R14	QRSA08J-152YN	RESISTOR
	R15	QRSA08J-103YN	RESISTOR
	R16	QRSA08J-183YN	RESISTOR
	R17	QRSA08J-103YN	RESISTOR
	R18	QRSA08J-104YN	RESISTOR
	R19	QRSA08J-104YN	RESISTOR
	R20	QRSA08J-473YN	RESISTOR
	R21	QRSA08J-104YN	RESISTOR
	R22	QRSA08J-105YN	RESISTOR
	R23	QRSA08J-105YN	RESISTOR
	R24	QRSA08J-103YN	RESISTOR
	R25	QRSA08J-103YN	RESISTOR
	R26	QRSA08J-104YN	RESISTOR
	R27	QRSA08J-223YN	RESISTOR
	R28	QRSA08J-102YN	RESISTOR
	R29	QRSA08J-223YN	RESISTOR
	R30	QRSA08J-274YN	RESISTOR
	R31	QRSA08J-103YN	RESISTOR
	R32	QRSA08J-223YN	RESISTOR
	R33	QRSA08J-223YN	RESISTOR
	R34	QRSA08J-223YN	RESISTOR
	R35	QRSA08J-223YN	RESISTOR

#⚠	REF NO.	PART NO.	PART NAME, DESCRIPTION
	R36	QRSA08J-223YN	RESISTOR
	R37	QRSA08J-473YN	RESISTOR
	R38	QRSA08J-223YN	RESISTOR
	R39	QRSA08J-223YN	RESISTOR
	R40	QRSA08J-223YN	RESISTOR
	R41	QRSA08J-223YN	RESISTOR
	R42	QRSA08J-473YN	RESISTOR
	R44	QRSA08J-0R0Y	RESISTOR
	R45	QRSA08J-0R0Y	RESISTOR
	R46	QRSA08J-0R0Y	RESISTOR
	R47	QRSA08J-103YN	RESISTOR
	R48	QRSA08J-393YN	RESISTOR
	R49	QRSA08J-100YN	RESISTOR
	R50	QRSA08J-564YN	RESISTOR
	R51	QRSA08J-105YN	RESISTOR
	R52	QRSA08J-105YN	RESISTOR
	R101	QRV143F-3742	CMF RESISTOR
	R102	QVZ3513-224	V RESISTOR,TRC PRESET
	R103	QRSA08J-333YN	RESISTOR
	R104	QRSA08J-224YN	RESISTOR
	R105	QRSA08J-104YN	RESISTOR
	R106	QRSA08J-334YN	RESISTOR
	R107	QRSA08J-394YN	RESISTOR
	R108	QRSA08J-103YN	RESISTOR
	R109	QVZ3513-474	V RESISTOR, X2 PRESET
	R112	QRSA08J-103YN	RESISTOR
	R113	QRSA08J-103YN	RESISTOR
	R114	QRSA08J-0R0Y	RESISTOR
	R115	QRSA08J-563YN	RESISTOR
	R116	QRSA08J-273YN	RESISTOR
	R117	QRSA08J-824YN	RESISTOR
	R118	QRSA08J-394YN	RESISTOR
	R119	QRSA08J-104YN	RESISTOR
	R120	QVZ3513-104	V RESISTOR,REC SW
	R121	QRSA08J-824YN	RESISTOR
	R122	QRSA08J-824YN	RESISTOR
	R123	QRSA08J-563YN	RESISTOR
	R124	QRSA08J-0R0Y	RESISTOR
	R125	QRSA08J-105YN	RESISTOR
	R126	QRSA08J-104YN	RESISTOR
	R127	QRSA08J-103YN	RESISTOR
	R128	QRSA08J-224YN	RESISTOR
	R129	QVZ3513-154	V RESISTOR,CTL DUTY
	R130	QRSA08J-223YN	RESISTOR
	R131	QRSA08J-123YN	RESISTOR
	R132	QRSA08J-103YN	RESISTOR
	R133	QRSA08J-564YN	RESISTOR
	R134	QRSA08J-475YN	RESISTOR
	R135	QRSA08J-154YN	RESISTOR
	R136	QRD161J-272	RESISTOR
	R137	QRSA08J-0R0Y	RESISTOR
	C1	QCYA1HK-102	CAPACITOR
	C2	QCTA1CH-151	CAPACITOR
	C3	QCFA1EZ-104	CAPACITOR
	C4	QEN61CM-106	NP E CAPACITOR
	C5	QCYA1HK-182	CAPACITOR
	C6	QETC1CM-476	E CAPACITOR
	C7	QCYA1HK-103	CAPACITOR
	C8	QEF81CM-105	TANTAL CAPACITOR
	C9	QEN61HM-105	NP E CAPACITOR
	C10	QETC1CM-227	E CAPACITOR
	C11	QCYA1HK-103	CAPACITOR
	C12	QETC1CM-476	E CAPACITOR
	C13	QCYA1HK-103	CAPACITOR
	C14	QEF81CM-105	TANTAL CAPACITOR
	C15	QEF81CM-105	TANTAL CAPACITOR

#⚠	REF NO.	PART NO.	PART NAME, DESCRIPTION
	C16	QCTA1CH-470	CAPACITOR
	C17	QCYA1HK-103	CAPACITOR
	C18	QCYA1HK-152	CAPACITOR
	C19	QCYA1HK-471	CAPACITOR
	C20	QCFA1EZ-104	CAPACITOR
	C21	QCFA1EZ-104	M CAPACITOR
	C101	QETC0JM-476	E CAPACITOR
	C102	QCYA1HK-103	CAPACITOR
	C103	QFM41HJ-683M	M CAPACITOR
	C104	QFN31HJ-104	M CAPACITOR
	C105	QFP42AF-273M	PP CAPACITOR
	C106	QCYA1HK-333	CAPACITOR
	C107	QCTA1CH-331	CAPACITOR
	C108	QCYA1HK-102	CAPACITOR
	C109	QFN31HJ-124	M CAPACITOR
	C110	QFM41HJ-104M	M CAPACITOR
	C111	QETC0JM-226	E CAPACITOR
	C112	QETC0JM-226	E CAPACITOR
	C113	QFP42AF-123M	PP CAPACITOR
	C114	QCYA1HK-333	CAPACITOR
	C115	QCTA1CH-331	CAPACITOR
	C116	QFM41HJ-123M	M CAPACITOR
⚠	C117	QCYA1HK-102	CAPACITOR
	C118	QFN31HJ-124	M CAPACITOR
	C119	QCTA1CH-390	CAPACITOR
	C120	QCTA1CH-390	CAPACITOR
	L1	PU48530-221J	PEAKING COIL
	L2	PU48530-221J	PEAKING COIL
	L101	PU48530-221J	PEAKING COIL
⚠	X101	PU47701	CRYSTAL RESONATOR
	X102	PU47220	CRYSTAL RESONATOR
	TP1	PU54983	TEST PIN, X7(1-3,101-104)
	CN5	PGZ00802-10	MICRO HEADER
	CN6	PGZ00802-08	MICRO HEADER
	CN7	PGZ00802-05	MICRO HEADER
	CN8	PGZ00802-10	MICRO HEADER
	CN9	PGZ00802-05	MICRO HEADER

****

****
* 49. POWER TRANSISTOR BOARD ASSEMBLY <41> *
****

⚠	PWB	PGE30148-01-01	POWER TRANSISTOR BOARD
⚠	R1	QRD167J-222	RESISTOR
⚠	C1	QET41CM-337	E CAPACITOR

****

****
* 50. HEADPHONE VR BOARD ASSEMBLY <51> *
****

	PWBA	PGE20153A1	HEADPHONE VR BOARD ASSY
	FJ1	PGW0101-40CC553	PARALLEL WIRE
	R1	QRSA08J-332YN	RESISTOR
	R2	QRSA08J-332YN	RESISTOR

HEADPHONE VR, HEADPHONE JACK, L CHANNEL MIC JACK, R CHANNEL MIC JACK, JACK, CROSS TALK CANCEL

#⚠	REF NO.	PART NO.	PART NAME, DESCRIPTION
	R3	PGZ01027	V RESISTOR, (R3,4)
	C1	QEK41EM-475	E CAPACITOR
	C2	QEK41EM-475	E CAPACITOR
	CN1	PU58654-3	CONNECTOR

51. HEADPHONE JACK BOARD ASSEMBLY <52>

	PWBA	PGE20153A2-01	HEADPHONE BOARD ASSY
	MH1	PGZ01081-05	MICRO HEADER
	Q1	DTC323TK	TRANSISTOR
	Q2	DTC323TK	TRANSISTOR
	R9	QRSA08J-103YN	RESISTOR
	R10	QRSA08J-103YN	RESISTOR
	R11	QRSA08J-100YN	RESISTOR
	R12	QRSA08J-100YN	RESISTOR
	R31	QRSA08J-330YN	RESISTOR
	R32	QRSA08J-330YN	RESISTOR
	R54	QRSA08J-0R0Y	RESISTOR
	R56	QRSA08J-0R0Y	RESISTOR
	C5	QETA1AM-477	E CAPACITOR
	C6	QETA1AM-477	E CAPACITOR
	C19	QCFA1EZ-104	CAPACITOR
	C20	QCFA1EZ-104	CAPACITOR
	J1	PGZ00725	JACK

52. L CHANNEL MIC JACK BOARD ASSEMBLY <53>

	PWBA	PGE20153A3	L CHANNEL MIC BOARD ASSY
	MH2	PGZ01081-05	MICRO HEADER
	R14	QRSA08J-123YN	RESISTOR
	R15	QRSA08J-124YN	RESISTOR
	R51	QRSA08J-0R0Y	RESISTOR
	C3	QEF81CM-475	TANTAL CAPACITOR
	J2	PGZ00595-02	MIC JACK

53. R CHANNEL MIC JACK BOARD ASSEMBLY <54>

	PWBA	PGE20153A4	R CHANNEL MIC BOARD ASSY
	MH3	PGZ01081-05	MICRO HEADER
	R16	QRSA08J-123YN	RESISTOR
	R17	QRSA08J-124YN	RESISTOR
	R52	QRSA08J-0R0Y	RESISTOR
	C4	QEF81CM-475	T CAPACITOR
	J3	PGZ00595-02	MIC JACK

54. JACK BOARD ASSEMBLY <55>

	PWBA	PGE20153A5	JACK BOARD ASSY
	IC1	M5216FP	IC
	IC2	NJM2068MD	IC
	R5	QRSA08J-104YN	RESISTOR
	R6	QRSA08J-104YN	RESISTOR
	R7	QRSA08J-104YN	RESISTOR
	R8	QRSA08J-104YN	RESISTOR
	R13	NRS016J-151NZR	RESISTOR
	R18	QRSA08J-124YN	RESISTOR
	R19	QRSA08J-563YN	RESISTOR
	R20	QRSA08J-270YN	RESISTOR
	R21	QRSA08J-221YN	RESISTOR
	R22	QRSA08J-102YN	RESISTOR
	R23	QRSA08J-102YN	RESISTOR
	R24	QRSA08J-124YN	RESISTOR
	R25	QRSA08J-563YN	RESISTOR
	R26	QRSA08J-270YN	RESISTOR
	R27	QRSA08J-221YN	RESISTOR
	R28	QRSA08J-101YN	RESISTOR
	R29	QRSA08J-101YN	RESISTOR
	R30	NRS016J-151NZR	RESISTOR
	R53	QRSA08J-0R0Y	RESISTOR
	R55	QRSA08J-0R0Y	RESISTOR
	C7	QEK41CM-107	E CAPACITOR
	C8	QCTA1CH-680	CAPACITOR
	C9	QEK41CM-107	E CAPACITOR
	C10	QEK41CM-107	E CAPACITOR
	C11	QCTA1CH-680	CAPACITOR
	C12	QEK41CM-107	E CAPACITOR
	C13	QEK41CM-107	E CAPACITOR
	C14	QER41CM-106	E CAPACITOR
	C15	QER41CM-106	E CAPACITOR
	C16	QEK41CM-107	E CAPACITOR
	CN2	PU58655-4	CONNECTOR
	CN3	PU58655-5	CONNECTOR

55. CROSS TALK CANCEL BOARD ASSEMBLY <63>

	PWBA	PGE20220A	C.T.C.PWB ASSY
	IC1	AN607P	IC
	IC2	AN607P	IC

*⚠	REF NO.	PART NO.	PART NAME, DESCRIPTION
	IC3	AN607P	IC
	IC4	VC2061	IC
	IC5	CXL5003P	IC
	IC6	CXL5003P	IC
	IC7	AN608P	IC
	IC8	BA401	IC
	IC9	AN614	IC
	IC10	CXL5003P	IC
	IC11	CXL5003P	IC
	IC12	AN607P	IC
	IC13	AN607P	IC
	IC14	TA7348P	IC
	IC15	AN608P	IC
	Q1	2SC2647C	TRANSISTOR
	Q2	2SC2647C	TRANSISTOR
	Q3	2SC2647C	TRANSISTOR
	Q4	2SC2647C	TRANSISTOR
	Q5	2SC2647C	TRANSISTOR
	Q6	2SC2647C	TRANSISTOR
	Q7	2SC2647C	TRANSISTOR
	Q8	2SC2647C	TRANSISTOR
	Q9	2SC2647C	TRANSISTOR
	Q10	2SC2647C	TRANSISTOR
	Q11	2SC2647C	TRANSISTOR
	Q12	2SC2647C	TRANSISTOR
	Q13	2SC2647C	TRANSISTOR
	Q14	2SC2647C	TRANSISTOR
	Q15	2SC2647C	TRANSISTOR
	Q17	2SC2647C	TRANSISTOR
	Q18	2SC2647C	TRANSISTOR
	Q19	2SC2647C	TRANSISTOR
	Q20	2SC2647C	TRANSISTOR
	Q21	2SC2647C	TRANSISTOR
	Q22	2SC2647C	TRANSISTOR
	Q23	2SB641Q	TRANSISTOR
	Q24	2SC2647C	TRANSISTOR
	Q25	2SC2647C	TRANSISTOR
	Q26	2SC2647C	TRANSISTOR
	Q27	2SC2647C	TRANSISTOR
	Q28	2SC2647C	TRANSISTOR
	Q29	DTC144EF	TRANSISTOR
	Q30	DTC144EF	TRANSISTOR
	Q33	DTC144EF	TRANSISTOR
	D1	1SS135	DIODE
	D2	1SS135	DIODE
	D3	1SS133	DIODE
	R1	QRD161J-102	RESISTOR
	R2	QVZ3513-102	V RESISTOR,0H COL LEVEL
	R3	QRD161J-561	RESISTOR
	R4	QRD161J-222	RESISTOR
	R5	QRD161J-152	RESISTOR
	R6	QRD161J-182	RESISTOR
	R7	QRD161J-391	RESISTOR
	R8	QVZ3513-221	V RESISTOR,2H DL LEVEL
	R9	QRD161J-181	RESISTOR
	R10	QRD161J-561	RESISTOR
	R11	QRD161J-152	RESISTOR
	R12	QRD161J-222	RESISTOR
	R13	QRD161J-152	RESISTOR
	R14	QRD161J-182	RESISTOR
	R15	QRD161J-391	RESISTOR
	R16	QVZ3513-221	V RESISTOR,4H DL LEVEL
	R17	QRD161J-181	RESISTOR
	R18	QRD161J-392	RESISTOR
	R19	QRD161J-182	RESISTOR
	R20	QRD161J-223	RESISTOR

*⚠	REF NO.	PART NO.	PART NAME, DESCRIPTION
	R21	QRD161J-103	RESISTOR
	R22	QRD161J-102	RESISTOR
	R23	QVZ3513-102	V RESISTOR,2H DL FOR N.C
	R24	QRD161J-102	RESISTOR
	R25	QRD161J-682	RESISTOR
	R26	QRD161J-222	RESISTOR
	R27	QRD161J-102	RESISTOR
	R28	QRD161J-102	RESISTOR
	R30	QRD161J-102	RESISTOR
	R31	QRD161J-101	RESISTOR
	R32	QRD161J-151	RESISTOR
	R33	QVZ3513-471	V RESISTOR,PB COL LEVEL
	R34	QRD161J-271	RESISTOR
	R35	QVZ3513-222	V RESISTOR,N.C BAL
	R36	QRD161J-223	RESISTOR
	R37	QRD161J-223	RESISTOR
	R38	QRD161J-332	RESISTOR
	R39	QRD161J-104	RESISTOR
	R40	QVZ3513-103	V RESISTOR, BIAS1
	R41	QRD161J-223	RESISTOR
	R42	QRD161J-822	RESISTOR
	R43	QRD161J-561	RESISTOR
	R44	QRD161J-102	RESISTOR
	R46	QRD161J-392	RESISTOR
	R47	QVZ3513-103	V RESISTOR, BIAS2
	R48	QRD161J-223	RESISTOR
	R49	QRD161J-472	RESISTOR
	R50	QRD161J-102	RESISTOR
	R51	QRD161J-471	RESISTOR
	R52	QRD161J-102	RESISTOR
	R53	QRD161J-223	RESISTOR
	R54	QRD161J-223	RESISTOR
	R55	QRD161J-392	RESISTOR
	R56	QRD161J-391	RESISTOR
	R57	QRD161J-0R0	RESISTOR
	R58	QRD161J-391	RESISTOR
	R59	QRD161J-223	RESISTOR
	R60	QRD161J-103	RESISTOR
	R61	QRD161J-102	RESISTOR
	R62	QVZ3513-102	V RESISTOR,CARR DL ADJ
	R63	QRD161J-102	RESISTOR
	R64	QRD161J-392	RESISTOR
	R65	QRD161J-102	RESISTOR
	R66	QVZ3513-222	V RESISTOR,NOISE LEVEL
	R67	QRD161J-102	RESISTOR
	R68	QRD161J-472	RESISTOR
	R69	QRD161J-103	RESISTOR
	R70	QRD161J-472	RESISTOR
	R71	QRD161J-103	RESISTOR
	R72	QRD161J-472	RESISTOR
	R73	QRD161J-102	RESISTOR
	R74	QRD161J-102	RESISTOR
	R75	QRD161J-223	RESISTOR
	R76	QRD161J-103	RESISTOR
	R77	QRD161J-102	RESISTOR
	R78	QRD161J-102	RESISTOR
	R79	QVZ3513-222	V RESISTOR,627 NOISE DL
	R80	QRD161J-222	RESISTOR
	R81	QRD161J-223	RESISTOR
	R82	QRD161J-223	RESISTOR
	R83	QRD161J-332	RESISTOR
	R84	QRD161J-104	RESISTOR
	R85	QVZ3513-103	V RESISTOR,BIAS3
	R86	QRD161J-223	RESISTOR
	R87	QRD161J-682	RESISTOR
	R88	QRD161J-102	RESISTOR
	R89	QRD161J-331	RESISTOR

CROSS TALK CANCEL

#⚠	REF NO.	PART NO.	PART NAME, DESCRIPTION
	R91	QRD161J-562	RESISTOR
	R92	QVZ3513-103	V RESISTOR,BIAS4
	R93	QRD163J-472	RESISTOR
	R94	QRD161J-102	RESISTOR
	R95	QRD161J-681	RESISTOR
	R96	QRD161J-331	RESISTOR
	R97	QRD161J-101	RESISTOR
	R98	QRD161J-332	RESISTOR
	R99	QRD161J-392	RESISTOR
	R100	QRD161J-102	RESISTOR
	R101	QRD161J-0R0	RESISTOR
	R102	QRD161J-122	RESISTOR
	R103	QRD161J-223	RESISTOR
	R104	QRD161J-103	RESISTOR
	R105	QRD161J-102	RESISTOR
	R106	QRD161J-102	RESISTOR
	R107	QVZ3513-102	V RESISTOR,627 OUT DL
	R108	QRD161J-222	RESISTOR
	R109	QRD161J-101	RESISTOR
	R110	QRD161J-561	RESISTOR
	R111	QRD161J-103	RESISTOR
	R112	QRD161J-332	RESISTOR
	R113	QVZ3513-472	V RESISTOR,627 OUT LEVEL1
	R114	QRD161J-182	RESISTOR
	R115	QVZ3513-332	V RESISTOR,627 OUT LEVEL2
	R116	QRD161J-272	RESISTOR
	R117	QVZ3513-222	V RESISTOR,DC BAL
	R118	QRD161J-682	RESISTOR
	R119	QRD161J-181	RESISTOR
	R120	QRD161J-333	RESISTOR
	R121	QRD161J-223	RESISTOR
	R122	QRD161J-223	RESISTOR
	R123	QRD161J-562	RESISTOR
	R124	QRD161J-472	RESISTOR
	R125	QRD161J-103	RESISTOR
	R126	QRD161J-750	RESISTOR
	R127	QRD161J-472	RESISTOR
	R128	QRD161J-223	RESISTOR
	R129	QRD161J-182	RESISTOR
	R130	QRD161J-822	RESISTOR
	R131	QRD161J-393	RESISTOR
	R132	QRD161J-822	RESISTOR
	R133	QRD161J-392	RESISTOR
	R134	QRD161J-103	RESISTOR
	R135	QRD163J-104	RESISTOR
	R136	QRD163J-104	RESISTOR
	R137	QRD161J-223	RESISTOR
	R138	QRD161J-222	RESISTOR
	R139	QRD161J-561	RESISTOR
	R156	QRD161J-331	RESISTOR
	C1	QFN31HK-103	M CAPACITOR
	C2	QFN31HK-103	M CAPACITOR
	C3	QCF31HP-223	CAPACITOR
	C4	QER61CM-476	E CAPACITOR
	C5	QFN31HK-103	M CAPACITOR
	C7	QCF31HP-223	CAPACITOR
	C8	QER61CM-476	E CAPACITOR
	C9	QFN31HK-103	M CAPACITOR
	C11	QCF31HP-223	CAPACITOR
	C12	QER61CM-476	E CAPACITOR
	C13	QFN31HK-103	M CAPACITOR
	C14	QCT25CH-270	CAPACITOR
	C15	QCF31HP-223	CAPACITOR
	C17	QER61CM-476	E CAPACITOR
	C18	QCF31HP-223	CAPACITOR
	C19	QEK41CM-107	E CAPACITOR

#⚠	REF NO.	PART NO.	PART NAME, DESCRIPTION
	C20	QFN31HK-103	M CAPACITOR
	C21	QER61CM-476	E CAPACITOR
	C22	QER61CM-476	E CAPACITOR
	C23	QFN31HK-103	M CAPACITOR
	C24	QFN31HK-103	M CAPACITOR
	C25	QER60JM-476	E CAPACITOR
	C26	QCF31HP-223	CAPACITOR
	C27	QER61HM-104GZ	E CAPACITOR
	C28	QFN31HK-103	M CAPACITOR
	C29	QER61AM-476	E CAPACITOR
	C30	QCF31HP-223	CAPACITOR
	C31	QFN31HK-103	M CAPACITOR
	C32	QCS31HJ-150	CAPACITOR
	C34	QFN31HK-103	M CAPACITOR
	C35	QER60JM-476	E CAPACITOR
	C36	QCF31HP-223	CAPACITOR
	C37	QER61HM-104GZ	E CAPACITOR
	C38	QFN31HK-103	M CAPACITOR
	C39	QER61AM-476	E CAPACITOR
	C40	QCF31HP-223	CAPACITOR
	C41	QCF31HP-223	CAPACITOR
	C42	QER60JM-476	E CAPACITOR
	C43	QFN31HK-103	M CAPACITOR
	C44	QFN31HK-103	M CAPACITOR
	C45	QER61CM-476	E CAPACITOR
	C46	QCF31HP-223	CAPACITOR
	C47	QFN31HK-103	M CAPACITOR
	C48	QCF31HP-223	CAPACITOR
	C49	QFN31HK-103	M CAPACITOR
	C50	QFN31HK-103	M CAPACITOR
	C51	QCT25CH-101	CAPACITOR
	C52	QCF31HP-223	CAPACITOR
	C53	QFN31HK-103	M CAPACITOR
	C54	QFN31HK-223	M CAPACITOR
	C55	QCF31HP-223	CAPACITOR
	C56	QER61CM-476	E CAPACITOR
	C57	QFN31HK-223	M CAPACITOR
	C58	QFN31HK-333	M CAPACITOR
	C59	QER61CM-106GZ	E CAPACITOR
	C60	QCS31HJ-390	CAPACITOR
	C61	QCF31HP-223	CAPACITOR
	C62	QFN31HK-223	M CAPACITOR
	C63	QER61HM-335GZ	E CAPACITOR
	C64	QER61CM-476	E CAPACITOR
	C65	QCF31HP-223	CAPACITOR
	C66	QER61CM-476	E CAPACITOR
	C67	QFN31HK-223	M CAPACITOR
	C69	QFN31HK-223	M CAPACITOR
	C70	QCT25CH-101	CAPACITOR
	C71	QCF31HP-223	CAPACITOR
	C72	QFN31HK-223	M CAPACITOR
	C73	QFN31HK-223	M CAPACITOR
	C74	QER60JM-476	E CAPACITOR
	C75	QCF31HP-223	CAPACITOR
	C76	QFN31HK-103	M CAPACITOR
	C77	QER61HM-104GZ	E CAPACITOR
	C78	QER61AM-476	E CAPACITOR
	C79	QCF31HP-223	CAPACITOR
	C80	QFN31HK-223	M CAPACITOR
	C81	QCS31HJ-150	CAPACITOR
	C83	QFN31HK-223	M CAPACITOR
	C84	QER60JM-476	E CAPACITOR
	C85	QCF31HP-223	CAPACITOR
	C86	QFN31HK-103	M CAPACITOR
	C87	QER61HM-104GZ	E CAPACITOR
	C88	QER61AM-476	E CAPACITOR
	C89	QCF31HP-223	CAPACITOR

#⚠	REF NO.	PART NO.	PART NAME, DESCRIPTION
	C90	QER61CM-476	E CAPACITOR
	C91	QCF31HP-223	CAPACITOR
	C92	QFN31HK-223	M CAPACITOR
	C93	QFN31HK-223	M CAPACITOR
	C94	QCF31HP-223	CAPACITOR
	C95	QER61CM-476	E CAPACITOR
	C96	QFN31HK-223	M CAPACITOR
	C97	QFN31HK-223	M CAPACITOR
	C98	QCT25CH-101	CAPACITOR
	C99	QCF31HP-223	CAPACITOR
	C100	QFN31HK-223	M CAPACITOR
	C101	QFN31HK-223	M CAPACITOR
	C102	QFN31HK-223	M CAPACITOR
	C103	QCF31HP-223	CAPACITOR
	C104	QER61CM-476	E CAPACITOR
	C105	QFN31HK-472	M CAPACITOR
	C106	QFN31HK-223	M CAPACITOR
	C107	QFN31HK-223	M CAPACITOR
	C108	QCF31HP-223	CAPACITOR
	C109	QCF31HP-223	CAPACITOR
	C110	QER61CM-476	E CAPACITOR
	C111	QFN31HK-103	M CAPACITOR
	C112	QFN31HK-102	M CAPACITOR
	C113	QER61CM-476	E CAPACITOR
	C114	QFN31HK-223	M CAPACITOR
	C115	QFN31HK-223	M CAPACITOR
	C118	QCT25CH-270	CAPACITOR
	C119	QER61CM-476	E CAPACITOR
	C120	QCF31HP-223	CAPACITOR
	L1	PU48530-221J	COIL
	L2	PU48530-8R2J	COIL
	L3	PGZ00973	COIL
	L4	PU48530-221J	COIL
	L5	PU48530-8R2J	COIL
	L6	PGZ00973	COIL
	L7	PU48530-221J	COIL
	L8	PU48530-221J	COIL
	L9	PU48530-221J	COIL
	L10	PU48530-221J	COIL
	L11	PU48530-100J	COIL
	L12	PU48530-221J	COIL
	L13	PU48530-221J	COIL
	L14	PU48530-221J	COIL
	L15	PU48530-221J	COIL
	L16	PU48530-221J	COIL
	L17	PU48530-221J	COIL
	L18	PU48530-221J	COIL
	L19	PU48530-100J	COIL
	L20	PU48530-221J	COIL
	L21	PU48530-221J	COIL
	L22	PU48530-221J	COIL
	L23	PU48530-221J	COIL
	L24	PU48530-221J	COIL
	LPF1	PGZ00181	LOW PASS FILTER
	LPF2	PGZ00198-003	LOW PASS FILTER
	BPF1	PU54410-2	BAND PASS FILTER
	DL1	PGZ00974	DELAY LINE
	DL2	PGZ00974	DELAY LINE
	DL3	PGZ00131-001	DELAY LINE
	DL4	PGZ00179-080	DELAY LINE
	X1	PU59642	CRYSTAL RESONATOR
	K1	PGZ00354	FERRITE BEADS(K1-6), X6

#⚠	REF NO.	PART NO.	PART NAME, DESCRIPTION
	SLD1	PRD30254	SHIELD CASE
	SLD2	PRD30255	SHIELD CAP
	SLD3	PRS30012B	SHIELD ASS'Y
	TP1	PU54983	TEST PIN, X19
	CN1	PU58844-104	CAP HOUSING
	CN2	PU58844-108	CAP HOUSING
	CN3	PU58844-109	CAP HOUSING
	CP1	QRD167J-0R0	RESISTOR
	CP2	QRD167J-0R0	RESISTOR
	CP3	QRD167J-0R0	RESISTOR
		-CROSS TALK SUB MODULE-	
	MOD1	PGE40252A	C.T.SUB ASSY
	Q31	2SC2647C	TRANSISTOR
	Q32	2SC2647C	TRANSISTOR
	R140	QRD163J-333	RESISTOR
	R141	QRD163J-562	RESISTOR
	R142	QRD163J-681	RESISTOR
	R143	QRD167J-221	RESISTOR
	R144	QRD163J-333	RESISTOR
	R145	QRD163J-562	RESISTOR
	R146	QRD163J-681	RESISTOR
	R147	QRD167J-221	RESISTOR
	C6	QCFB1EZ-223	CAPACITOR
	C10	QCFB1EZ-223	CAPACITOR
	C116	QCFB1EZ-223	CAPACITOR
	C117	QCFB1EZ-223	CAPACITOR
	C121	QCFB1EZ-223	CAPACITOR
	C122	QCFB1EZ-223	CAPACITOR

****

****
* 56. Y 2H DELAY BOARD ASSEMBLY <65> *
****

	PWBA	PGE20217A-01	Y2HDL PWB ASSY
	IC1	TA7347P	IC
	IC2	VC2031DP	IC
	IC3	AN608P	IC
	IC4	AN608P	IC
	IC5	TA7347P	IC
	IC6	AN608P	IC
	IC7	BA7021	IC
	IC8	CXL1004P	IC
	IC9	CXL1004P	IC
	IC10	8VT15	IC
	IC11	BA401	IC
	IC12	8VT15	IC
	Q1	2SC2647C	TRANSISTOR
	Q2	2SC2647C	TRANSISTOR
	Q3	2SC2647C	TRANSISTOR
	Q4	2SB641Q	TRANSISTOR
	Q5	2SC2647C	TRANSISTOR
	Q6	2SC2647C	TRANSISTOR
	Q7	2SB641Q	TRANSISTOR
	Q8	2SC2647C	TRANSISTOR
	Q9	2SC2647C	TRANSISTOR
	Q10	2SC2647C	TRANSISTOR

Y 2H DELAY

#⚠	REF NO.	PART NO.	PART NAME, DESCRIPTION
	Q11	2SB641Q	TRANSISTOR
	Q12	2SC2647C	TRANSISTOR
	Q13	2SC2647C	TRANSISTOR
	Q14	2SB641Q	TRANSISTOR
	Q15	2SC2647C	TRANSISTOR
	Q16	2SC2647C	TRANSISTOR
	Q17	2SC2647C	TRANSISTOR
	Q18	2SC2647C	TRANSISTOR
	Q19	2SC2647C	TRANSISTOR
	Q20	2SB641Q	TRANSISTOR
	Q21	2SC2647C	TRANSISTOR
	Q22	2SC2647C	TRANSISTOR
	Q23	2SC2647C	TRANSISTOR
	Q24	2SB641Q	TRANSISTOR
	Q25	2SC2647C	TRANSISTOR
	Q26	2SC2647C	TRANSISTOR
	Q27	2SC2647C	TRANSISTOR
	Q28	2SC2647C	TRANSISTOR
	Q29	2SC2647C	TRANSISTOR
	Q30	2SC2647C	TRANSISTOR
	Q31	2SC2647C	TRANSISTOR
	Q33	2SC2647C	TRANSISTOR
	Q35	2SC2647C	TRANSISTOR
	Q36	2SC2647C	TRANSISTOR
	Q37	2SC2647C	TRANSISTOR
	Q38	2SC2647C	TRANSISTOR
	Q39	2SC2647C	TRANSISTOR
	D1	1SS133	DIODE
	D2	1SS133	DIODE
	D3	QRD161J-0R0	RESISTOR
	D4	1SS99	DIODE
	D5	1SS99	DIODE
	D6	1SS133	DIODE
	R1	QRD161J-152	RESISTOR
	R2	QRD161J-102	RESISTOR
	R3	QRD161J-102	RESISTOR
	R4	QRD161J-221	RESISTOR
	R5	QRD161J-333	RESISTOR
	R6	QRD161J-681	RESISTOR
	R7	QRD161J-152	RESISTOR
	R8	QRD161J-102	RESISTOR
	R9	QRD161J-821	RESISTOR
	R10	QRD161J-101	RESISTOR
	R11	QRD161J-222	RESISTOR
	R12	QRD161J-393	RESISTOR
	R13	QRD161J-223	RESISTOR
	R14	QRD161J-102	RESISTOR
	R15	QRD161J-561	RESISTOR
	R16	QVZ3513-681	V RESISTOR,S SYNC COMP
	R17	QRD161J-102	RESISTOR
	R18	QVZ3513-222	V RESISTOR,S.VIDEO EQ
	R19	QRD161J-152	RESISTOR
	R20	QRD161J-103	RESISTOR
	R21	QRD161J-223	RESISTOR
	R22	QRD161J-101	RESISTOR
	R23	QRD161J-222	RESISTOR
	R24	QRD161J-182	RESISTOR
	R25	QVZ3513-222	V RESISTOR,PB 5V ADJ
	R26	QRD161J-152	RESISTOR
	R27	QRD161J-682	RESISTOR
	R28	QVZ3513-103	V RESISTOR,LIMIT BAL
	R29	QRD161J-561	RESISTOR
	R30	QRD161J-472	RESISTOR
	R31	QVZ3513-102	V RESISTOR,S SYNC COMP IN
	R32	QRD161J-102	RESISTOR
	R33	QRD161J-561	RESISTOR

#⚠	REF NO.	PART NO.	PART NAME, DESCRIPTION
	R34	QRV141F-3301AY	RESISTOR
	R35	QRV141F-3301AY	RESISTOR
	R36	QRV141F-1501AY	CMF RESISTOR
	R37	QRD161J-561	RESISTOR
	R38	QRD161J-102	RESISTOR
	R39	QRV141F-1001AY	CMF RESISTOR
	R40	QRV141F-1001AY	CMF RESISTOR
	R41	QRV141F-1501AY	CMF RESISTOR
	R42	QRV141F-4700AY	CMF RESISTOR
	R43	QRV141F-1001AY	CMF RESISTOR
	R44	QRV141F-3301AY	RESISTOR
	R45	QRV143F-2701	RESISTOR
	R46	QVZ3513-222	V RESISTOR,SUB EMPHA IN
	R47	QRD161J-391	RESISTOR
	R48	QRD161J-561	RESISTOR
	R49	QRD161J-101	RESISTOR
	R50	QRD161J-102	RESISTOR
	R51	QRD161J-392	RESISTOR
	R52	QRD161J-102	RESISTOR
	R54	QRD161J-223	RESISTOR
	R55	QRD161J-102	RESISTOR
	R56	QRD161J-223	RESISTOR
	R57	QRD161J-562	RESISTOR
	R58	QVZ3513-222	V RESISTOR,N SYNC COMP
	R59	QRD161J-392	RESISTOR
	R60	QRD161J-561	RESISTOR
	R61	QRD161J-121	RESISTOR
	R62	QRD161J-472	RESISTOR
	R63	QRD161J-682	RESISTOR
	R64	QRD161J-102	RESISTOR
	R65	QRD161J-392	RESISTOR
	R66	QRD161J-101	RESISTOR
	R67	QRD161J-221	RESISTOR
	R68	QRD161J-333	RESISTOR
	R69	QRD161J-222	RESISTOR
	R70	QRD161J-222	RESISTOR
	R71	QVZ3513-222	V RESISTOR,COLOR VIDEO EQ
	R72	QRD161J-101	RESISTOR
	R73	QRD161J-222	RESISTOR
	R74	QRD161J-223	RESISTOR
	R75	QRD161J-152	RESISTOR
	R76	QRD161J-103	RESISTOR
	R77	QVZ3513-332	V RESISTOR,COLOR PHASE EQ
	R78	QRD161J-911	RESISTOR
	R79	QRD161J-102	RESISTOR
	R80	QRD161J-393	RESISTOR
	R81	QRD161J-153	RESISTOR
	R82	QVZ3513-102	V RESISTOR,COLOR Y LEVEL
	R83	QRD161J-391	RESISTOR
	R84	QRD161J-561	RESISTOR
	R85	QRD161J-102	RESISTOR
	R86	QRD161J-102	RESISTOR
	R88	QRD161J-102	RESISTOR
	R89	QRD161J-222	RESISTOR
	R90	QVZ3513-222	V RESISTOR,B/W VIDEO EQ
	R91	QRD161J-101	RESISTOR
	R92	QRD161J-222	RESISTOR
	R93	QRD161J-223	RESISTOR
	R94	QRD161J-152	RESISTOR
	R95	QRD161J-103	RESISTOR
	R96	QRD161J-102	RESISTOR
	R97	QRD161J-393	RESISTOR
	R98	QVZ3513-332	V RESISTOR,B/W VIDEO EQ
	R99	QRD161J-153	RESISTOR
	R100	QRD161J-911	RESISTOR
	R101	QRD161J-0R0	RESISTOR
	R102	QVZ3513-102	V RESISTOR,B/W Y LEVEL

#⚠	REF NO.	PART NO.	PART NAME, DESCRIPTION
	R103	QRD161J-102	RESISTOR
	R104	QRD161J-822	RESISTOR
	R105	QRD161J-102	RESISTOR
	R106	QRD161J-392	RESISTOR
	R107	QRD161J-101	RESISTOR
	R108	QRD161J-102	RESISTOR
	R109	QRD161J-102	RESISTOR
	R110	QRD161J-103	RESISTOR
	R111	QRD161J-221	RESISTOR
	R112	QRD161J-102	RESISTOR
	R113	QRD161J-104	RESISTOR
	R114	QVZ3513-103	V RESISTOR,BIAS ADJ1
	R115	QVZ3513-472	V RESISTOR,BIAS ADJ2
	R116	QRD161J-222	RESISTOR
	R117	QRD161J-821	RESISTOR
	R118	QRD161J-333	RESISTOR
	R119	QRD161J-223	RESISTOR
	R120	QVZ3513-103	V RESISTOR,BIAS ADJ3
	R121	QVZ3513-472	V RESISTOR, BIAS ADJ4
	R122	QRD161J-333	RESISTOR
	R123	QRD161J-223	RESISTOR
	R124	QRD161J-223	RESISTOR
	R125	QRD161J-103	RESISTOR
	R126	QRD161J-102	RESISTOR
	R127	QRD161J-221	RESISTOR
	R128	QVZ3513-152	V RESISTOR,DOC LEVEL
	R129	QRD161J-822	RESISTOR
	R130	QRD161J-223	RESISTOR
	R131	QRD161J-103	RESISTOR
	R132	QRD161J-102	RESISTOR
	R133	QRD161J-102	RESISTOR
	R134	QVZ3513-102	V RESISTOR,1H DL ADJ
	R135	QRD161J-152	RESISTOR
	R136	QRD161J-223	RESISTOR
	R137	QRD161J-103	RESISTOR
	R138	QRD161J-561	RESISTOR
	R139	QRD161J-102	RESISTOR
	R140	QVZ3513-152	V RESISTOR,NC BAL
	R141	QRD161J-103	RESISTOR
	R142	QRD161J-822	RESISTOR
	R143	QRD161J-223	RESISTOR
	R144	QRD161J-102	RESISTOR
	R145	QRD161J-102	RESISTOR
	R146	QVZ3513-102	V RESISTOR,2H DL ADJ
	R147	QRD161J-152	RESISTOR
	R148	QRD161J-223	RESISTOR
	R149	QRD161J-223	RESISTOR
	R150	QRD161J-393	RESISTOR
	R151	QRD161J-393	RESISTOR
	R152	QRD161J-562	RESISTOR
	R153	QRD161J-102	RESISTOR
	R154	QRV141F-4700AY	CMF RESISTOR
	R155	QRD161J-102	RESISTOR
	R156	QRD161J-103	RESISTOR
	R157	QRD161J-152	RESISTOR
	R158	QRD161J-682	RESISTOR
	R161	QVZ3513-101	V RESISTOR,NOISE LEVEL
	R162	QRD161J-472	RESISTOR
	R163	QRD161J-103	RESISTOR
	R164	QRD161J-223	RESISTOR
	R165	QRD161J-223	RESISTOR
	R166	QRD161J-393	RESISTOR
	R167	QRD161J-393	RESISTOR
	R168	QRD161J-562	RESISTOR
	R169	QRD161J-561	RESISTOR
	R170	QRD161J-102	RESISTOR
	R171	QRD161J-682	RESISTOR

#⚠	REF NO.	PART NO.	PART NAME, DESCRIPTION
	R172	QRD161J-0R0	RESISTOR
	R173	QRD161J-104	RESISTOR
	R174	QRD161J-102	RESISTOR
	R175	QRD161J-102	RESISTOR
	R176	QRD161J-104	RESISTOR
	R177	QRD161J-471	RESISTOR
	R178	QRD161J-680	RESISTOR
	R179	QRD161J-101	RESISTOR
	R180	QRD161J-101	RESISTOR
	R181	QRD161J-391	RESISTOR
	R183	QRD161J-123	RESISTOR
	R184	QRD161J-102	RESISTOR
	R185	QRD161J-331	RESISTOR
	R186	QRD161J-561	RESISTOR
	R187	QRD161J-102	RESISTOR
	R188	ERT-D2FHL102S	THERMISTOR
	R189	ERT-D2FHL102S	THERMISTOR
	C1	QCF31HP-223	CAPACITOR
	C2	QER61CM-476	E CAPACITOR
	C3	QER61CM-476	E CAPACITOR
	C4	QER61CM-476	E CAPACITOR
	C7	QER61CM-476	E CAPACITOR
	C8	QCF31HP-223	CAPACITOR
	C9	QER61CM-476	E CAPACITOR
	C10	QCF31HP-223	CAPACITOR
	C11	QER61CM-476	E CAPACITOR
	C12	QCS31HJ-150	CAPACITOR
	C13	QER61CM-476	E CAPACITOR
	C14	QER41CM-476	E CAPACITOR
	C15	PU51163-221	CAPACITOR
	C16	PU51163-271	CAPACITOR
	C17	PU51163-271	CAPACITOR
	C18	PU51163-820	CAPACITOR
	C19	PU51163-271	CAPACITOR
	C20	PU51163-271	CAPACITOR
	C21	PU51163-271	CAPACITOR
	C22	PU51163-221	CAPACITOR
	C23	PU51163-820	CAPACITOR
	C24	QER61CM-476	E CAPACITOR
	C25	QCF31HP-223	CAPACITOR
	C26	QER61CM-476	E CAPACITOR
	C27	QER61CM-476	E CAPACITOR
	C28	QER61HM-475	E CAPACITOR
	C29	QER61HM-475	E CAPACITOR
	C30	QER61CM-476	E CAPACITOR
	C31	QER61CM-476	E CAPACITOR
	C32	QCS31HJ-330	CAPACITOR
	C33	QCF31HP-223	CAPACITOR
	C34	QER61CM-476	E CAPACITOR
	C35	QER61CM-476	E CAPACITOR
	C36	QER61CM-476	E CAPACITOR
	C37	QCF31HP-223	CAPACITOR
	C38	QER61CM-476	E CAPACITOR
	C39	QER61CM-476	E CAPACITOR
	C40	QER41CM-476	E CAPACITOR
	C42	QER60JM-227	E CAPACITOR
	C43	QCF31HP-223	CAPACITOR
	C44	QER61CM-476	E CAPACITOR
	C45	QER61CM-476	E CAPACITOR
	C46	QCF31HP-223	CAPACITOR
	C47	QER61CM-476	E CAPACITOR
	C48	QER61CM-476	E CAPACITOR
	C49	QER61CM-476	E CAPACITOR
	C50	QCF31HP-223	CAPACITOR
	C51	QER61CM-476	E CAPACITOR
	C52	QCS31HJ-220	CAPACITOR
	C53	QER60JM-227	E CAPACITOR

Y 2H DELAY

#⚠	REF NO.	PART NO.	PART NAME, DESCRIPTION
	C54	QCS31HJ-820	CAPACITOR
	C55	QER60JM-227	E CAPACITOR
	C56	QER61CM-226	E CAPACITOR
	C57	QCF31HP-223	CAPACITOR
	C58	QER61CM-476	E CAPACITOR
	C59	QCS31HJ-330	CAPACITOR
	C60	QER61CM-226	E CAPACITOR
	C61	QER61CM-476	E CAPACITOR
	C62	QCF31HP-223	CAPACITOR
	C64	QCF31HP-223	CAPACITOR
	C65	QER61CM-476	E CAPACITOR
	C66	QCS31HJ-220	CAPACITOR
	C67	QER61CM-476	E CAPACITOR
	C68	QCS31HJ-560	CAPACITOR
	C69	QER61CM-476	E CAPACITOR
	C70	QER61AM-336	E CAPACITOR
	C71	QER61CM-476	E CAPACITOR
	C72	QCF31HP-223	CAPACITOR
	C73	QFN31HK-102	M CAPACITOR
	C74	QCF31HP-223	CAPACITOR
	C75	QER61CM-476	E CAPACITOR
	C76	QER61CM-476	E CAPACITOR
	C77	QER60JM-227	E CAPACITOR
	C78	QER61HM-105GZ	E CAPACITOR
	C79	QER61CM-226	E CAPACITOR
	C80	QER61HM-105GZ	E CAPACITOR
	C81	QCF31HP-223	CAPACITOR
	C82	QER61CM-476	E CAPACITOR
	C83	QER61HM-335GZ	E CAPACITOR
	C84	QFN31HK-473	M CAPACITOR
	C85	QER41HM-335	E CAPACITOR
	C86	QER41HM-335	E CAPACITOR
	C87	QER61AM-476	E CAPACITOR
	C88	QCF31HP-223	CAPACITOR
	C89	QER61AM-476	E CAPACITOR
	C90	QCF31HP-223	CAPACITOR
	C91	QER61CM-106	E CAPACITOR
	C92	QCF31HP-223	CAPACITOR
	C93	QER61AM-476	E CAPACITOR
	C94	QER61HM-335GZ	E CAPACITOR
	C95	QFN31HK-473	M CAPACITOR
	C96	QER61CM-226	E CAPACITOR
	C97	QER41HM-335	E CAPACITOR
	C98	QER61AM-476	E CAPACITOR
	C99	QCF11HP-223	CAPACITOR
	C100	QER61AM-476	E CAPACITOR
	C101	QCF11HP-223	CAPACITOR
	C102	QER61CM-106	E CAPACITOR
	C103	QER60JM-476	E CAPACITOR
	C104	QCF31HP-223	CAPACITOR
	C105	QER61CM-476	E CAPACITOR
	C106	QEK41CM-227	E CAPACITOR
	C107	QCS31HJ-120	CAPACITOR
	C108	QCS31HJ-330	CAPACITOR
	C109	QCS31HJ-270	CAPACITOR
	C110	QER61CM-476	E CAPACITOR
	C111	QCT25CH-101	CAPACITOR
	C112	QER61CM-476	E CAPACITOR
	C113	QER61CM-476	E CAPACITOR
	C114	QEK41CM-227	E CAPACITOR
	C115	QER61CM-476	E CAPACITOR
	C116	QCS31HJ-120	CAPACITOR
	C117	QCS31HJ-330	CAPACITOR
	C118	QCS31HJ-270	CAPACITOR
	C119	QER61CM-476	E CAPACITOR
	C120	QCT25CH-101	CAPACITOR
	C121	QER61CM-476	E CAPACITOR

#⚠	REF NO.	PART NO.	PART NAME, DESCRIPTION
	C122	QER61CM-476	E CAPACITOR
	C123	QER61CM-476	E CAPACITOR
	C124	QER61CM-476	E CAPACITOR
	C125	QCF11HP-223	CAPACITOR
	C126	QER61CM-476	E CAPACITOR
	C127	QFN31HK-103	M CAPACITOR
	C128	QER61CM-106GZ	E CAPACITOR
	C129	QER61CM-106GZ	E CAPACITOR
	C132	QCF31HP-223	CAPACITOR
	C133	QER41CM-476	E CAPACITOR
	C134	QER41CM-106	E CAPACITOR
	C135	QER61CM-106GZ	E CAPACITOR
	C136	QER61CM-476	E CAPACITOR
	C137	QER61CM-476	E CAPACITOR
	C138	QCF31HP-223	CAPACITOR
	C140	QCF31HP-223	CAPACITOR
	C141	QER61HM-335GZ	E CAPACITOR
	C142	QCF31HP-223	CAPACITOR
	C143	QCF31HP-223	CAPACITOR
	C144	QCS31HJ-180	CAPACITOR
	C145	QCS31HJ-120	CAPACITOR
	C146	QCS31HJ-180	CAPACITOR
	C147	QCS31HJ-120	CAPACITOR
	C148	QCF31HP-223	CAPACITOR
	C149	QCF11HP-223	CAPACITOR
	C150	QCF11HP-223	CAPACITOR
	C151	QCF11HP-223	CAPACITOR
	C152	QFN31HK-102	M CAPACITOR
	C153	QCS11HJ-101	CAPACITOR
	C154	QCF11HP-223	CAPACITOR
	L1	PU48530-221J	COIL
	L2	PU48530-221J	COIL
	L3	PU48530-330J	COIL
	L4	PU48530-221J	COIL
	L5	PU48530-221J	COIL
	L6	PU48530-221J	COIL
	L7	PU48530-221J	COIL
	L8	PU48530-221J	COIL
	L9	PU48530-221J	COIL
	L10	PU48530-221J	COIL
	L11	PU48530-121J	COIL
	L12	PU48530-470J	COIL
	L13	PU48530-221J	COIL
	L14	PU48530-221J	COIL
	L15	PU48530-121J	COIL
	L16	PU48530-470J	COIL
	L17	PU48530-221J	COIL
	L18	PU48530-221J	COIL
	L19	PU48530-221J	COIL
	L20	PU48530-221J	COIL
	L21	PU48530-221J	COIL
	L22	PU48530-221J	COIL
	L23	PU48530-221J	COIL
	L24	PU48530-270J	COIL
	L25	PU48530-330J	COIL
	L26	PU48530-221J	COIL
	L27	PU48530-270J	COIL
	L28	PU48530-330J	COIL
	L29	PU48530-221J	COIL
	L30	PU48530-560J	COIL
	L31	PU48530-121J	COIL
	L32	PU48530-221J	COIL
	L33	PU48530-221J	COIL
	L34	PU48530-221J	COIL
	L35	PU48530-150J	COIL
	L36	PU48530-150J	COIL

#⚠	REF NO.	PART NO.	PART NAME, DESCRIPTION
	EQ1	PGZ00800	LOW PASS FILTER
	LPF1	PGZ00799	LOW PASS FILTER
	LPF2	PGZ00972	LOW PASS FILTER
	LPF3	PGZ00183	LOW PASS FILTER
	DL1	PGZ00131-002	DELAY LINE
	DL2	PGZ00131-002	DELAY LINE
	DL3	PU59499-3	BUS WIRE
	X1	PGZ00957	CRYSTAL
	K1	PGZ00354	FERRITE BEADS(K1-5), X5
	TH1	ERT-D2FHK-202S	THERMISTOR
	SLD1	PRD30254	SHIELD CASE
		PRS30012B	SHIELD ASS'Y
	SLD2	PRD30255	SHIELD CAP
		PRS30013	INSULATOR
	TP1	PU54983	TEST PIN, X29(1-23,25-30)
	CN1	PU58844-104	CAP HOUSING
	CN2	PU58844-104R	CAP HOUSING
	CN3	PU58844-111	CAP HOUSING
	CP1	QRD167J-0R0	RESISTOR
	CP2	QRD167J-0R0	RESISTOR
	CP3	QRD167J-0R0	RESISTOR

****

****
* 57. REC COLOR BOARD ASSEMBLY <66> *
****

	PWBA	PGE10098A-01	REC COLOR PWB ASSY
	IC1	TA7347P	IC
	IC2	TA7348P	IC
	IC3	TA7348P	IC
	IC4	AN608P	IC
	IC5	TA7347P	IC
	IC6	AN6360	IC
	IC7	AN6371	IC
	IC8	TA7347P	IC
	IC9	TA7347P	IC
	IC10	TA7348P	IC
	IC11	AN6362	IC
	IC12	TC4538BP	IC
	IC13	TC4538BP	IC
	IC14	BA401	IC
	IC15	BA401	IC
	IC16	AN6371	IC
	IC17	AN6371	IC
	Q1	DTC144EF	TRANSISTOR
	Q2	2SC2647C	TRANSISTOR
	Q3	2SC2647C	TRANSISTOR
	Q4	2SC2647C	TRANSISTOR
	Q5	2SC2647C	TRANSISTOR
	Q6	2SC2647C	TRANSISTOR
	Q7	DTC144EF	TRANSISTOR
	Q8	2SC2647C	TRANSISTOR
	Q9	2SC2647C	TRANSISTOR
	Q10	2SC2647C	TRANSISTOR
	Q11	2SC2647C	TRANSISTOR
	Q12	2SC2647C	TRANSISTOR
	Q13	2SC2647C	TRANSISTOR
	Q14	2SC2647C	TRANSISTOR
	Q15	DTC144EF	TRANSISTOR
	Q16	2SC2647C	TRANSISTOR
	Q17	2SC2647C	TRANSISTOR
	Q19	2SC2647C	TRANSISTOR
	Q20	2SC2647C	TRANSISTOR
	Q21	2SC2647C	TRANSISTOR
	Q22	DTC144EF	TRANSISTOR
	Q23	2SC2647C	TRANSISTOR
	Q24	2SC2647C	TRANSISTOR
	Q25	2SC2647C	TRANSISTOR
	Q26	2SC2647C	TRANSISTOR
	Q27	2SC2647C	TRANSISTOR
	Q28	2SC2647C	TRANSISTOR
	Q29	2SC2647C	TRANSISTOR
	Q30	2SC2647C	TRANSISTOR
	Q31	2SC2647C	TRANSISTOR
	Q32	2SC2647C	TRANSISTOR
	Q33	2SC2647C	TRANSISTOR
	Q34	DTC144EF	TRANSISTOR
	Q35	DTC144EF	TRANSISTOR
	Q36	2SC2647C	TRANSISTOR
	Q37	2SC2647C	TRANSISTOR
	Q38	DTC144EF	TRANSISTOR
	Q39	2SC2647C	TRANSISTOR
	Q40	2SK30A-0Y	TRANSISTOR
	Q41	DTC144EF	TRANSISTOR
	Q42	DTC144EF	TRANSISTOR
	Q43	2SC2647C	TRANSISTOR
	Q44	2SC2647C	TRANSISTOR
	Q45	2SC2647C	TRANSISTOR
	Q46	2SC2647C	TRANSISTOR
	Q47	2SC2647C	TRANSISTOR
	Q48	DTC144EF	TRANSISTOR
	Q49	DTC144EF	TRANSISTOR
	Q50	DTC144EF	TRANSISTOR
	Q51	2SC2647C	TRANSISTOR
	Q52	2SC2647C	TRANSISTOR
	R1	QRD161J-153	RESISTOR
	R2	QRD161J-102	RESISTOR
	R3	QRD161J-223	RESISTOR
	R4	QRD161J-223	RESISTOR
	R5	QRD161J-332	RESISTOR
	R6	QRD161J-102	RESISTOR
	R7	QRD161J-153	RESISTOR
	R8	QRD161J-103	RESISTOR
	R9	QRD161J-102	RESISTOR
	R10	QRD161J-102	RESISTOR
	R11	QVZ3513-222	V RESISTOR,S.627K REC DL
	R12	QVZ3513-222	V RESISTOR,S.627K REC LEVEL
	R13	QRD161J-102	RESISTOR
	R14	QRD161J-102	RESISTOR
	R15	QVZ3513-222	V RESISTOR,N.627K REC DL
	R16	QVZ3513-222	V R,N.627K REC LEVEL
	R17	QRD161J-181	RESISTOR
	R18	QRD161J-223	RESISTOR
	R19	QRD161J-223	RESISTOR
	R20	QRD161J-223	RESISTOR
	R21	QRD161J-181	RESISTOR
	R22	QRD161J-181	RESISTOR
	R23	QRD161J-682	RESISTOR
	R24	QRD161J-271	RESISTOR
	R25	QRD161J-393	RESISTOR
	R26	QRD161J-102	RESISTOR
	R27	QRD161J-103	RESISTOR
	R28	QRD161J-153	RESISTOR
	R29	QRD161J-102	RESISTOR

REC COLOR

#⚠	REF NO.	PART NO.	PART NAME, DESCRIPTION
	R30	QRD161J-102	RESISTOR
	R31	QVZ3513-222	V RESISTOR,S.EE DL
	R32	QVZ3513-222	V RESISTOR,N.EE DL
	R33	QRD161J-223	RESISTOR
	R34	QRD161J-223	RESISTOR
	R35	QRD161J-104	RESISTOR
	R36	QVZ3513-222	V RESISTOR,EE.627K LEVEL
	R37	QRD161J-183	RESISTOR
	R38	QRD161J-562	RESISTOR
	R39	QRD161J-102	RESISTOR
	R40	QRD161J-102	RESISTOR
	R41	QRD161J-102	RESISTOR
	R42	QRD161J-391	RESISTOR
	R43	QRD161J-122	RESISTOR
	R44	QRD161J-102	RESISTOR
	R45	QRD161J-153	RESISTOR
	R46	QRD161J-103	RESISTOR
	R47	QVZ3513-222	V RESISTOR,S.PB DL
	R48	QVZ3513-222	V RESISTOR,S.PB LEVEL
	R49	QRD161J-181	RESISTOR
	R50	QRD161J-223	RESISTOR
	R51	QVZ3513-102	V RESISTOR,P.BURST LEV2
	R52	QVZ3513-102	V RESISTOR,P.BURST LEV1
	R53	QRD161J-153	RESISTOR
	R54	QRD161J-103	RESISTOR
	R61	QRD161J-684	RESISTOR
	R62	QRD161J-224	RESISTOR
	R63	QRD161J-183	RESISTOR
	R64	QRD161J-221	RESISTOR
	R65	QRD161J-392	RESISTOR
	R66	QRD161J-471	RESISTOR
	R67	QRD161J-471	RESISTOR
	R69	QRD161J-102	RESISTOR
	R70	QRD161J-102	RESISTOR
	R71	QRD161J-102	RESISTOR
	R72	QRD161J-473	RESISTOR
	R73	QRD161J-102	RESISTOR
	R74	QRD161J-393	RESISTOR
	R75	QRD161J-182	RESISTOR
	R76	QRD161J-394	RESISTOR
	R77	QRD161J-222	RESISTOR
	R78	QRD161J-471	RESISTOR
	R79	QRD161J-472	RESISTOR
	R80	QRD161J-472	RESISTOR
	R81	QRD161J-472	RESISTOR
	R82	QRD161J-223	RESISTOR
	R83	QRD161J-153	RESISTOR
	R84	QRD161J-103	RESISTOR
	R85	QRD161J-102	RESISTOR
	R86	QVZ3513-222	V RESISTOR,DUB REC COL DL
	R87	QVZ3513-102	V R,DUB REC COL LEVEL
	R88	QRD161J-102	RESISTOR
	R89	QRD161J-102	RESISTOR
	R90	QRD161J-221	RESISTOR
	R91	QVZ3513-102	V R,LINE REC COL LEVEL
	R92	QRD161J-181	RESISTOR
	R93	QRD161J-223	RESISTOR
	R94	QRD161J-103	RESISTOR
	R95	QRD161J-153	RESISTOR
	R96	QRD161J-102	RESISTOR
	R97	QVZ3513-102	V R,S.REC COL DL
	R98	QRD161J-102	RESISTOR
	R99	QRD161J-102	RESISTOR
	R100	QVZ3513-222	V R,S.REC COL LEVEL
	R101	QRD161J-102	RESISTOR
	R102	QRD161J-102	RESISTOR

#⚠	REF NO.	PART NO.	PART NAME, DESCRIPTION
	R103	QVZ3513-222	V RESISTOR,N.REC COL DL
	R104	QVZ3513-222	V R,N.REC COL LEVEL
	R105	QRD161J-750	RESISTOR
	R106	QRD161J-223	RESISTOR
	R107	QRD161J-223	RESISTOR
	R108	QRD161J-332	RESISTOR
	R109	QRD161J-681	RESISTOR
	R110	QRD161J-183	RESISTOR
	R111	QRD161J-682	RESISTOR
	R112	QRD161J-681	RESISTOR
	R113	QRD161J-102	RESISTOR
	R114	QRD161J-331	RESISTOR
	R115	QRD161J-181	RESISTOR
	R116	QRD161J-223	RESISTOR
	R117	QRD161J-223	RESISTOR
	R118	QRD161J-331	RESISTOR
	R119	QRD161J-102	RESISTOR
	R120	QRD161J-681	RESISTOR
	R121	QRD161J-682	RESISTOR
	R122	QRD161J-183	RESISTOR
	R123	QRD161J-681	RESISTOR
	R124	QRD161J-332	RESISTOR
	R125	QRD161J-223	RESISTOR
	R126	QRD161J-223	RESISTOR
	R127	QRD161J-473	RESISTOR
	R128	QRD161J-471	RESISTOR
	R129	QRD161J-122	RESISTOR
	R130	QVZ3513-471	V RESISTOR,AFC
	R131	QRD161J-681	RESISTOR
	R132	QRD161J-222	RESISTOR
	R133	QRD161J-562	RESISTOR
	R134	QRD161J-123	RESISTOR
	R135	QRD161J-471	RESISTOR
	R136	QRD161J-562	RESISTOR
	R137	QRD161J-562	RESISTOR
	R138	QVZ3513-103	V RESISTOR,P.BURST END
	R139	QRD161J-223	RESISTOR
	R140	QRD161J-223	RESISTOR
	R141	QRD161J-682	RESISTOR
	R142	QVZ3513-103	V RESISTOR,P.BURST START
	R143	QRD161J-103	RESISTOR
	R144	QRD161J-0R0	RESISTOR
	R145	QRD161J-152	RESISTOR
	R146	QRD161J-222	RESISTOR
	R147	QRD161J-152	RESISTOR
	R148	QRD161J-222	RESISTOR
	R149	QRD161J-472	RESISTOR
	R150	QRD161J-103	RESISTOR
	R151	QRD161J-223	RESISTOR
	R152	QRD161J-103	RESISTOR
	R153	QVZ3513-223	V R,BURST GATE STOP
	R154	QRD161J-472	RESISTOR
	R155	QVZ3513-103	V R,BURST GATE START
	R156	QRD161J-222	RESISTOR
	R157	QRD161J-102	RESISTOR
	R158	QRD161J-102	RESISTOR
	R159	QRD161J-103	RESISTOR
	R160	QRD161J-102	RESISTOR
	R161	QRD161J-561	RESISTOR
	R162	QRD161J-102	RESISTOR
	R163	QRD161J-102	RESISTOR
	R164	QRD161J-392	RESISTOR
	R165	QRD161J-102	RESISTOR
	R166	QRD161J-333	RESISTOR
	R167	QRD161J-272	RESISTOR
	R168	QRD161J-184	RESISTOR
	R169	QRD161J-182	RESISTOR
	R170	QRD161J-222	RESISTOR

#⚠	REF NO.	PART NO.	PART NAME, DESCRIPTION
	R171	QRD161J-274	RESISTOR
	R172	QRD161J-222	RESISTOR
	R173	QRD161J-183	RESISTOR
	R174	QRD161J-184	RESISTOR
	R175	QRD161J-182	RESISTOR
	R176	QRD161J-274	RESISTOR
	R178	QRD161J-223	RESISTOR
	R179	QRD161J-223	RESISTOR
	R180	QRD161J-472	RESISTOR
	R181	QRD161J-102	RESISTOR
	R182	QRD161J-102	RESISTOR
	R183	QVZ3513-222	V RESISTOR,N.PB DL
	R184	QVZ3513-222	V RESISTOR,N.PB LEVEL
	R185	QRD161J-223	RESISTOR
	R186	QRD161J-223	RESISTOR
	R187	QRD161J-181	RESISTOR
	R188	QRD161J-392	RESISTOR
	R189	QRD161J-181	RESISTOR
	R190	QRD161J-223	RESISTOR
	R191	QRD161J-562	RESISTOR
	R193	QRD161J-681	RESISTOR
	R194	QRD161J-681	RESISTOR
	R195	QRD161J-122	RESISTOR
	R196	QVZ3513-222	V RESISTOR,EE BURST PHASE
	R197	QRD161J-104	RESISTOR
	R198	QRD161J-560	RESISTOR
	R199	QRD161J-223	RESISTOR
	R200	QRD161J-153	RESISTOR
	R201	QRD161J-222	RESISTOR
	R202	QRD161J-272	RESISTOR
	R203	QRD161J-102	RESISTOR
	R204	QRD161J-102	RESISTOR
	R206	QRD161J-102	RESISTOR
	R207	QRD161J-561	RESISTOR
	R208	QRD161J-152	RESISTOR
	R209	QRD161J-152	RESISTOR
	R210	QRD167J-182	RESISTOR
	R211	QRD161J-223	RESISTOR
	C1	QER61CM-476	E CAPACITOR
	C2	QCF31HP-223	CAPACITOR
	C3	QCF31HP-223	CAPACITOR
	C4	QER61CM-476	E CAPACITOR
	C5	QEN61HM-105	NP E CAPACITOR
	C6	QCF31HP-223	CAPACITOR
	C7	QFN31HK-223	M CAPACITOR
	C8	QCF31HP-223	CAPACITOR
	C9	QFN31HK-223	M CAPACITOR
	C10	QCT25CH-101	CAPACITOR
	C11	QCT25CH-101	CAPACITOR
	C12	QFN31HK-223	M CAPACITOR
	C13	QFN31HK-223	M CAPACITOR
	C14	QER61CM-476	E CAPACITOR
	C15	QCF31HP-223	CAPACITOR
	C16	QFN31HK-223	M CAPACITOR
	C17	QFN31HK-223	M CAPACITOR
	C18	QER61CM-476	E CAPACITOR
	C19	QCF31HP-223	CAPACITOR
	C20	QFN31HK-223	M CAPACITOR
	C21	QFN31HK-223	M CAPACITOR
	C22	QCS31HJ-101	CAPACITOR
	C23	QCF31HP-223	CAPACITOR
	C24	QCS31HJ-271	CAPACITOR
	C25	QFN31HK-223	M CAPACITOR
	C26	QER61CM-476	E CAPACITOR
	C27	QCF31HP-223	CAPACITOR
	C28	QFN31HK-562	M CAPACITOR

#⚠	REF NO.	PART NO.	PART NAME, DESCRIPTION
	C29	QCF31HP-223	CAPACITOR
	C30	QFN31HK-223	M CAPACITOR
	C31	QCT25CH-101	CAPACITOR
	C32	QFN31HK-223	M CAPACITOR
	C33	QFN31HK-223	M CAPACITOR
	C34	QFN31HK-223	M CAPACITOR
	C35	QER61CM-476	E CAPACITOR
	C36	QCF31HP-223	CAPACITOR
	C37	QCF31HP-223	CAPACITOR
	C38	QFN31HK-223	M CAPACITOR
	C42	QCF31HP-223	CAPACITOR
	C43	QER61CM-476	E CAPACITOR
	C44	QFN31HK-103	M CAPACITOR
	C46	QCF31HP-102	CAPACITOR
	C47	QCF31HP-102	CAPACITOR
	C48	QFN31HK-103	M CAPACITOR
	C49	QFN31HK-103	M CAPACITOR
	C50	QCF31HP-102	CAPACITOR
	C51	QCS31HJ-5R0	CAPACITOR
	C52	QCF31HP-103	CAPACITOR
	C53	QER61CM-476	E CAPACITOR
	C54	QCF31HP-223	CAPACITOR
	C55	QFN31HK-104	M CAPACITOR
	C56	QCF31HP-102	CAPACITOR
	C57	QCS31HJ-101	CAPACITOR
	C58	QFN31HK-223	M CAPACITOR
	C59	QFN31HK-223	M CAPACITOR
	C60	QCT25CH-100	CAPACITOR
	C61	QCF31HP-223	CAPACITOR
	C62	QER61CM-476	E CAPACITOR
	C63	QER61CM-476	E CAPACITOR
	C64	QFN31HK-223	M CAPACITOR
	C65	QCF31HP-103	CAPACITOR
	C66	QER61CM-476	E CAPACITOR
	C67	QCF31HP-223	CAPACITOR
	C68	QCS31HJ-6R0	CAPACITOR
	C69	QAT3001-016	T CAPACITOR,REC APC
	C70	QCS31HJ-4R0	CAPACITOR
	C71	QFN31HK-103	M CAPACITOR
	C72	QFN31HK-103	M CAPACITOR
	C73	QER61CM-106GZ	E CAPACITOR
	C74	QCF31HP-103	CAPACITOR
	C75	QCF31HP-223	CAPACITOR
	C76	QCF31HP-223	CAPACITOR
	C77	QCT25CH-101	CAPACITOR
	C78	QCF31HP-223	CAPACITOR
	C79	QCT25CH-101	CAPACITOR
	C80	QCF31HP-223	CAPACITOR
	C81	QFN31HK-223	M CAPACITOR
	C82	QFN31HK-223	M CAPACITOR
	C83	QCF31HP-223	CAPACITOR
	C84	QER61CM-476	E CAPACITOR
	C85	QFN31HK-223	M CAPACITOR
	C86	QCF31HP-223	CAPACITOR
	C87	QCF31HP-223	CAPACITOR
	C88	QCF31HP-223	CAPACITOR
	C89	QCF31HP-223	CAPACITOR
	C90	QFN31HK-103	M CAPACITOR
	C91	QFN31HK-223	M CAPACITOR
	C92	QCF31HP-223	CAPACITOR
	C93	QER61CM-476	E CAPACITOR
	C94	QFN31HK-223	M CAPACITOR
	C95	QCF31HP-223	CAPACITOR
	C96	QFN31HK-223	M CAPACITOR
	C97	QCF31HP-223	CAPACITOR
	C98	QCF31HP-223	CAPACITOR
	C99	QCF31HP-223	CAPACITOR

REC COLOR

#⚠	REF NO.	PART NO.	PART NAME, DESCRIPTION
	C100	QFN31HK-223	M CAPACITOR
	C101	QCS31HJ-681	CAPACITOR
	C102	QCT25CH-121	CAPACITOR
	C103	QCT25CH-181	CAPACITOR
	C104	QFN31HK-183	M CAPACITOR
	C105	QER61CM-106GZ	E CAPACITOR
	C106	QFN31HK-102	M CAPACITOR
	C107	QFN31HK-104	M CAPACITOR
	C108	QCS31HJ-821	CAPACITOR
	C109	QFN31HK-104	M CAPACITOR
	C110	QER61HM-105GZ	E CAPACITOR
	C111	QER61CM-476	E CAPACITOR
	C112	QCF31HP-223	CAPACITOR
	C113	QCF31HP-223	CAPACITOR
	C114	QETA1CM-227	E CAPACITOR
	C115	QCT25CH-101	CAPACITOR
	C116	QCT25CH-271	M CAPACITOR
	C117	QCF31HP-223	CAPACITOR
	C118	QER61CM-476	E CAPACITOR
	C119	QRD161J-0R0	RESISTOR
	C120	QER61CM-106	E CAPACITOR
	C121	QRD161J-0R0	RESISTOR
	C122	QCT25CH-101	CAPACITOR
	C123	QCT25CH-271	M CAPACITOR
	C124	QCF31HP-223	CAPACITOR
	C125	QER61CM-476	E CAPACITOR
	C126	QFN31HK-223	M CAPACITOR
	C127	QER61CM-476	E CAPACITOR
	C128	QCF31HP-223	CAPACITOR
	C129	QFN31HK-223	M CAPACITOR
	C130	QFN31HK-333	M CAPACITOR
	C131	QCF31HP-223	CAPACITOR
	C132	QER61CM-476	E CAPACITOR
	C133	QFN31HK-333	M CAPACITOR
	C134	QER61CM-106GZ	E CAPACITOR
	C135	QCS31HJ-151	CAPACITOR
	C136	QER61CM-106	E CAPACITOR
	C137	QFN31HK-273	M CAPACITOR
	C138	QCF31HP-223	CAPACITOR
	C139	QER61HM-225GZ	E CAPACITOR
	C140	QCS31HJ-150	CAPACITOR
	C141	QFN31HK-103	M CAPACITOR
	C142	QCS31HJ-101	CAPACITOR
	C143	QCF31HP-103	CAPACITOR
	C144	QER61CM-476	E CAPACITOR
	C145	QCF31HP-223	CAPACITOR
	C146	QCS31HJ-6R0	CAPACITOR
	C147	QAT3001-016	T CAPACITOR,APC C.F
	C148	QCS31HJ-4R0	CAPACITOR
	C149	QFN31HK-103	M CAPACITOR
	C150	QFN31HK-103	M CAPACITOR
	C151	QER61CM-106GZ	E CAPACITOR
	C152	QCF31HP-223	CAPACITOR
	C153	QCF31HP-223	CAPACITOR
	C154	QCF31HP-223	CAPACITOR
	C155	QER61HM-225GZ	E CAPACITOR
	C156	QCS31HJ-100	CAPACITOR
	C157	QFN31HK-103	M CAPACITOR
	C158	QCS31HJ-101	CAPACITOR
	C159	QCF31HP-103	CAPACITOR
	C160	QER61CM-476	E CAPACITOR
	C161	QCF31HP-223	CAPACITOR
	C162	QCS31HJ-6R0	CAPACITOR
	C163	QAT3001-016	T CAPACITOR,APC P.B
	C164	QCS31HJ-4R0	CAPACITOR
	C165	QFN31HK-103	M CAPACITOR
	C166	QFN31HK-103	M CAPACITOR

#⚠	REF NO.	PART NO.	PART NAME, DESCRIPTION
	C167	QFN31HK-563	M CAPACITOR
	C168	QER61CM-106	E CAPACITOR
	C169	QFN31HK-103	M CAPACITOR
	C170	QCT05CH-101	CAPACITOR
	C171	QFN31HK-223	M CAPACITOR
	C172	QFN31HK-223	M CAPACITOR
	C173	QER61CM-336	E CAPACITOR
	C174	QCF31HP-223	CAPACITOR
	C175	QFN31HK-223	M CAPACITOR
	C176	QER61CM-476	E CAPACITOR
	C177	QCF31HP-223	CAPACITOR
	C178	QFN31HK-223	M CAPACITOR
	C179	QCT25CH-101	CAPACITOR
	C180	QCF31HP-223	CAPACITOR
	C181	QCF31HP-223	CAPACITOR
	C182	QCT25CH-101	CAPACITOR
	C183	QFN31HK-223	M CAPACITOR
	C184	QFN31HK-223	M CAPACITOR
	C185	QCF31HP-223	CAPACITOR
	C186	QER61CM-476	E CAPACITOR
	C187	QCF31HP-223	CAPACITOR
	C188	QCT25CH-101	CAPACITOR
	C189	QCF31HP-223	CAPACITOR
	C190	QCS31HJ-101	CAPACITOR
	C191	QFN31HK-223	M CAPACITOR
	C192	QCS31HJ-101	CAPACITOR
	C193	QCS31HJ-5R0	CAPACITOR
	C194	QFN31HK-223	M CAPACITOR
	C195	QFN31HK-223	M CAPACITOR
	C196	QFN31HK-223	M CAPACITOR
	C197	QCS31HJ-220	CAPACITOR
	C198	QCF31HP-103	CAPACITOR
	C199	QAT3001-016	T CAPACITOR,P.B PHA
	C200	QCF31HP-223	CAPACITOR
	C201	QCF31HP-223	CAPACITOR
	C202	QCF81EZ-223	CAPACITOR
	C203	QCF31HP-223	CAPACITOR
	C204	QCF31HP-223	CAPACITOR
	C205	QCF11HP-223	CAPACITOR
	L1	PU48530-221J	COIL
	L2	PU48530-221J	COIL
	L3	PU48530-221J	COIL
	L4	PU48530-221J	COIL
	L5	PU48530-221J	COIL
	L6	PU48530-471J	COIL
	L7	PU48530-471J	COIL
	L8	PU48530-221J	COIL
	L9	PU48530-221J	COIL
	L10	PU48530-560J	COIL
	L11	PU48530-221J	COIL
	L12	PU48530-221J	COIL
	L13	PU48530-221J	COIL
	L14	PU48530-221J	COIL
	L15	PU48530-101J	COIL
	L16	PU48530-221J	COIL
	L17	PU48530-101J	COIL
	L18	PU48530-221J	COIL
	L19	PU48530-221J	COIL
	L20	PU48530-221J	COIL
	L21	PU48530-221J	COIL
	L22	PU48530-560J	COIL
	L23	PU48530-560J	COIL
	L24	PU48530-221J	COIL
	L25	PU48530-560J	COIL
	L26	PU48530-560J	COIL
	L27	PGZ00917-822	COIL
	L28	PU48530-221J	COIL

#⚠	REF NO.	PART NO.	PART NAME, DESCRIPTION
	L29	PU48530-221J	COIL
	L30	PU48530-221J	COIL
	L31	PU48530-221J	COIL
	L32	PU48530-821J	COIL
	L33	PU48530-471J	COIL
	L34	PGZ00917-822	COIL
	LPF1	PGZ00630	LOW PASS FILTER
	LPF2	PGZ01085	LOW PASS FILTER
	BPF1	PU54410-2	BAND PASS FILTER
	BPF2	PGZ00969	DELAY LINE
	DL1	PGZ00179-080	DELAY LINE
	DL2	PGZ00969	DELAY LINE
	DL3	PU53501-9	DELAY LINE
⚠	X1	PU31449-7	CRYSTAL RESONATOR
⚠	X2	PU31449-4	CRYSTAL RESONATOR
	X3	PU31449-2	CRYSTAL RESONATOR
	SW1	PU54440	SWITCH
	SLD1	PRS30013	INSULATOR
	SLD2	PRS30013-02	INSULATOR
	SLD3	PRS30012A	SHIELD ASS'Y
	TP1	PU54983	TEST PIN, X29
	CN1	PU58844-110	CAP HOUSING
	CN2	PU58844-110R	CAP HOUSING
	CN3	PU58844-111	CAP HOUSING
	CN4	PU58844-107	CAP HOUSING
	CP1	QRD167J-0R0	RESISTOR

****

****
* 58. FM REC & PB BOARD ASSEMBLY <67> *
****

	PWBA	PGE20216A	FM REC&PB PWB ASSY
	IC1	TC4030BP	IC
	IC2	TC4081BP	IC
	IC3	AN608P	IC
	IC5	TA7348P	IC
	IC6	TA7348P	IC
	IC7	AN607P	IC
	IC8	TA7347P	IC
	IC9	TC4052BP	IC
	IC10	UPC358C	IC
	IC11	UPC358C	IC
	Q2	DTC144EF	TRANSISTOR
	Q3	DTC144EF	TRANSISTOR
	Q4	DTC144EF	TRANSISTOR
	Q5	2SC2647C	TRANSISTOR
	Q6	2SC2647C	TRANSISTOR
	Q7	DTC144EF	TRANSISTOR
	Q8	DTC144EF	TRANSISTOR
	Q9	2SC2647C	TRANSISTOR
	Q10	2SC2647C	TRANSISTOR
	Q11	2SC2647C	TRANSISTOR
	Q12	2SC2647C	TRANSISTOR
	Q13	2SC2647C	TRANSISTOR
	Q14	2SC2647C	TRANSISTOR
	Q15	2SC2647C	TRANSISTOR
	Q16	2SC2647C	TRANSISTOR
	Q17	2SC2647C	TRANSISTOR
	Q18	2SC2647C	TRANSISTOR
	Q19	2SC2647C	TRANSISTOR
	Q20	2SC2647C	TRANSISTOR
	Q21	2SC2647C	TRANSISTOR
	Q22	2SC2647C	TRANSISTOR
	Q23	2SC2647C	TRANSISTOR
	Q24	2SC2647C	TRANSISTOR
	Q25	2SC2647C	TRANSISTOR
	Q26	2SC2647C	TRANSISTOR
	Q27	2SC2647C	TRANSISTOR
	Q28	2SC2647C	TRANSISTOR
	Q29	2SC2647C	TRANSISTOR
	Q30	2SD638Q	TRANSISTOR
	Q31	2SC2647C	TRANSISTOR
	Q32	DTC144EF	TRANSISTOR
	Q33	DTC144EF	TRANSISTOR
	Q34	DTC144EF	TRANSISTOR
	Q35	2SC2647C	TRANSISTOR
	Q36	2SC2647C	TRANSISTOR
	Q37	2SC2647C	TRANSISTOR
	Q38	2SC2647C	TRANSISTOR
	Q39	2SC2647C	TRANSISTOR
	Q40	2SC2647C	TRANSISTOR
	Q41	2SC2647C	TRANSISTOR
	Q42	2SC2647C	TRANSISTOR
	Q43	2SC2647C	TRANSISTOR
	Q44	2SC2647C	TRANSISTOR
	Q45	2SC2647C	TRANSISTOR
	Q46	2SC2647C	TRANSISTOR
	Q47	2SC2647C	TRANSISTOR
	Q48	DTC144EF	TRANSISTOR
	Q49	2SC2647C	TRANSISTOR
	Q50	2SC2647C	TRANSISTOR
	Q51	2SC2647C	TRANSISTOR
	Q52	2SC2647C	TRANSISTOR
	Q53	2SC2647C	TRANSISTOR
	Q54	2SC2647C	TRANSISTOR
	Q55	2SC2647C	TRANSISTOR
	Q56	2SC2647C	TRANSISTOR
	Q57	2SC2647C	TRANSISTOR
	Q58	2SB641Q	TRANSISTOR
	Q59	2SB641Q	TRANSISTOR
	Q60	2SC2647C	TRANSISTOR
	Q61	DTC144EF	TRANSISTOR
	D2	RD3.3EB2	ZENER DIODE
	D3	1SS93	DIODE
	D4	1SS93	DIODE
	D5	1SS93	DIODE
	D6	1SS93	DIODE
	D7	1SS133	DIODE
	D8	1SS133	DIODE
	D9	1SS133	DIODE
	D10	1SS133	DIODE
	R1	QRD161J-223	RESISTOR
	R2	QRD161J-223	RESISTOR
	R4	QRD161J-392	RESISTOR
	R5	QRD161J-272	RESISTOR
	R6	QRD161J-472	RESISTOR
	R8	QRD161J-223	RESISTOR
	R9	QVZ3513-682	V RESISTOR,S.TR METER
	R10	QVZ3513-682	V RESISTOR,N.TR METER
	R12	QRD161J-222	RESISTOR
	R14	QVZ3513-103	V RESISTOR,VIDEO METER
	R15	QRD161J-103	RESISTOR

FM REC & PB

#⚠	REF NO.	PART NO.	PART NAME, DESCRIPTION
	R16	QRD161J-680	RESISTOR
	R17	QRD161J-103	RESISTOR
	R18	QRD161J-560	RESISTOR
	R19	QRD161J-102	RESISTOR
	R20	QRD161J-102	RESISTOR
	R21	QRD163J-101	RESISTOR
	R22	QVZ3513-472	V RESISTOR,N.FM CH1
	R23	QVZ3513-222	V RESISTOR,S.FM CH1
	R24	QVZ3513-472	V RESISTOR,N.FM CH2
	R25	QVZ3513-222	V RESISTOR,S.FM CH2
	R26	QRD161J-562	RESISTOR
	R27	QRD161J-391	RESISTOR
	R28	QRD161J-102	RESISTOR
	R29	QRD161J-391	RESISTOR
	R30	QRD161J-562	RESISTOR
	R31	QRD161J-391	RESISTOR
	R32	QRD161J-102	RESISTOR
	R33	QRD161J-391	RESISTOR
	R34	QRD161J-393	RESISTOR
	R35	QVZ3513-102	V RESISTOR,S SEA COL BAL
	R36	QRD161J-101	RESISTOR
	R37	QVZ3513-472	V RESISTOR,S.COL CH2
	R38	QVZ3513-472	V RESISTOR,N.COL CH2
	R39	QVZ3513-472	V RESISTOR,S.COL CH1
	R40	QVZ3513-472	V RESISTOR,N.COL CH1
	R41	QRD161J-102	RESISTOR
	R42	QRD161J-222	RESISTOR
	R43	QRD161J-102	RESISTOR
	R44	QRD161J-222	RESISTOR
	R45	QRD161J-102	RESISTOR
	R46	QRD161J-222	RESISTOR
	R47	QRD161J-102	RESISTOR
	R48	QRD161J-222	RESISTOR
	R49	QRD161J-181	RESISTOR
	R50	QRD161J-223	RESISTOR
	R51	QRD161J-223	RESISTOR
	R52	QRD161J-223	RESISTOR
	R53	QRD161J-223	RESISTOR
	R54	QRD161J-181	RESISTOR
	R55	QRD161J-222	RESISTOR
	R56	QRD161J-681	RESISTOR
	R57	QRD161J-222	RESISTOR
	R58	QVZ3513-222	V R,S.SEA CH2 RF EQ
	R59	QRD161J-222	RESISTOR
	R60	QRD161J-0R0	RESISTOR
	R61	QRD161J-152	RESISTOR
	R62	QRD161J-681	RESISTOR
	R63	QRD161J-222	RESISTOR
	R64	QVZ3513-222	V R,N.SEA CH2 RF EQ
	R65	QRD161J-222	RESISTOR
	R66	QRD161J-333	RESISTOR
	R67	QRD161J-393	RESISTOR
	R68	QRD161J-333	RESISTOR
	R69	QVZ3513-102	V R,N.SEA COL BAL
	R70	QRD161J-222	RESISTOR
	R71	QRD161J-681	RESISTOR
	R72	QRD161J-222	RESISTOR
	R73	QVZ3513-222	V R,S.SEA CH1 RF EQ
	R74	QRD161J-222	RESISTOR
	R75	QRD161J-0R0	RESISTOR
	R76	QRD161J-152	RESISTOR
	R77	QRD161J-681	RESISTOR
	R78	QRD161J-222	RESISTOR
	R79	QVZ3513-222	V R,N.SEA CH1 RF EQ
	R80	QRD161J-222	RESISTOR
	R81	QRD161J-333	RESISTOR
	R82	QRD161J-393	RESISTOR

#⚠	REF NO.	PART NO.	PART NAME, DESCRIPTION
	R83	QRD161J-331	RESISTOR
	R84	QRD161J-471	RESISTOR
	R85	QRD161J-104	RESISTOR
	R86	QRD161J-681	RESISTOR
	R87	QRD161J-681	RESISTOR
	R88	QRD161J-472	RESISTOR
	R89	QRD161J-0R0	RESISTOR
	R90	QRD161J-222	RESISTOR
	R91	QRD161J-103	RESISTOR
	R92	QRD161J-103	RESISTOR
	R93	QRD161J-0R0	RESISTOR
	R94	QRD161J-0R0	RESISTOR
	R95	QRD161J-0R0	RESISTOR
	R96	QRD161J-152	RESISTOR
	R97	QRD161J-333	RESISTOR
	R98	QRD161J-181	RESISTOR
	R99	QRD161J-223	RESISTOR
	R100	QRD161J-223	RESISTOR
	R101	QRD161J-104	RESISTOR
	R102	QRD161J-104	RESISTOR
	R103	QRD161J-104	RESISTOR
	R104	QRD161J-104	RESISTOR
	R105	QRD161J-332	RESISTOR
	R106	QRD161J-332	RESISTOR
	R107	QRD161J-332	RESISTOR
	R108	QRD161J-332	RESISTOR
	R109	QRD161J-392	RESISTOR
	R110	QRD161J-392	RESISTOR
	R111	QRD161J-392	RESISTOR
	R112	QRD161J-392	RESISTOR
	R113	QRD161J-104	RESISTOR
	R114	QRD161J-104	RESISTOR
	R115	QRD161J-104	RESISTOR
	R116	QRD161J-104	RESISTOR
	R117	QRD161J-222	RESISTOR
	R118	QRD161J-681	RESISTOR
	R119	QRD161J-222	RESISTOR
	R120	QVZ3513-222	V RESISTOR,S.CH2 RF EQ
	R121	QRD161J-222	RESISTOR
	R122	QRD161J-0R0	RESISTOR
	R123	QRD161J-152	RESISTOR
	R124	QRD161J-681	RESISTOR
	R125	QRD161J-222	RESISTOR
	R126	QVZ3513-222	V RESISTOR,N.CH2 RF EQ
	R127	QRD161J-222	RESISTOR
	R128	QRD161J-333	RESISTOR
	R129	QRD161J-393	RESISTOR
	R130	QVZ3513-102	V RESISTOR,N.COL BAL
	R131	QRD161J-222	RESISTOR
	R132	QRD161J-681	RESISTOR
	R133	QRD161J-222	RESISTOR
	R134	QVZ3513-222	V RESISTOR,S.CH1 RF EQ
	R135	QRD161J-222	RESISTOR
	R136	QRD161J-0R0	RESISTOR
	R137	QRD161J-152	RESISTOR
	R138	QRD161J-681	RESISTOR
	R139	QRD161J-222	RESISTOR
	R140	QVZ3513-222	V RESISTOR,N.CH1 RF EQ
	R141	QRD161J-222	RESISTOR
	R142	QRD161J-333	RESISTOR
	R143	QRD161J-331	RESISTOR
	R144	QRD161J-393	RESISTOR
	R145	QRD161J-471	RESISTOR
	R147	QRD161J-333	RESISTOR
	R148	QRD161J-682	RESISTOR
	R149	QRD161J-102	RESISTOR
	R150	QRD161J-222	RESISTOR
	R151	QRD161J-561	RESISTOR
	R152	QRD161J-151	RESISTOR
	R153	QRD161J-103	RESISTOR
	R154	QRD161J-101	RESISTOR

#⚠	REF NO.	PART NO.	PART NAME, DESCRIPTION
	R155	QRD161J-472	RESISTOR
	R156	QVZ3513-473	V RESISTOR,P.BURST DET
	R157	QRD161J-103	RESISTOR
	R158	QRD161J-684	RESISTOR
	R159	QRD161J-271	RESISTOR
	R160	QRD161J-102	RESISTOR
	R161	QRD161J-561	RESISTOR
	R162	QRD161J-222	RESISTOR
	R163	QRD161J-472	RESISTOR
	R164	QVZ3513-473	V RESISTOR,BURST DET
	R165	QRD161J-103	RESISTOR
	R166	QRD161J-151	RESISTOR
	R167	QRD161J-103	RESISTOR
	R168	QRD161J-101	RESISTOR
	R169	QRD161J-684	RESISTOR
	R170	QRD161J-271	RESISTOR
	R171	QRD161J-333	RESISTOR
	R172	QRD161J-332	RESISTOR
	R173	QRD161J-332	RESISTOR
	R174	QRD163J-101	RESISTOR
	R175	QRD161J-393	RESISTOR
	R176	QVZ3513-102	V RESISTOR,S.COL BAL
	R179	QRD161J-392	RESISTOR
	R180	QRD167J-223	RESISTOR
	R181	QRD167J-223	RESISTOR
	R182	QRD167J-102	RESISTOR
	R183	QRD167J-223	RESISTOR
	R184	QRD167J-223	RESISTOR
	R185	QRD167J-102	RESISTOR
	R186	QRD167J-223	RESISTOR
	R187	QRD167J-223	RESISTOR
	R188	QRD163J-102	RESISTOR
	R189	QRD161J-561	RESISTOR
	R190	QRD161J-184	RESISTOR
	R191	QRD161J-184	RESISTOR
	R192	QRD161J-102	RESISTOR
	R193	QRD161J-221	RESISTOR
	R194	QRD161J-101	RESISTOR
	R195	QRD161J-103	RESISTOR
	R196	QRD161J-103	RESISTOR
	C1	QCF11HP-223	CAPACITOR
	C2	QER61CM-476	E CAPACITOR
	C3	QCF11HP-223	CAPACITOR
	C4	QER61CM-476	E CAPACITOR
	C5	QER61CM-476	E CAPACITOR
	C6	QCF11HP-223	CAPACITOR
	C7	QER61CM-476	E CAPACITOR
	C8	QER61HM-225G	E CAPACITOR
	C9	QCF11HP-223	CAPACITOR
	C10	QER61CM-476	E CAPACITOR
	C11	QER61CM-476	E CAPACITOR
	C12	QFN31HK-333	M CAPACITOR
	C13	QER61CM-106	E CAPACITOR
	C14	QER61CM-106	E CAPACITOR
	C15	QCF11HP-223	CAPACITOR
	C16	QER61CM-476	E CAPACITOR
	C17	QEPA1CM-106	NP E CAPACITOR
	C18	QEPA1CM-106	NP E CAPACITOR
	C19	QEPA1CM-106	NP E CAPACITOR
	C20	QEPA1CM-106	NP E CAPACITOR
	C21	QER61CM-476	E CAPACITOR
	C22	QCF11HP-223	CAPACITOR
	C23	QFN31HK-223	M CAPACITOR
	C24	QFN31HK-223	M CAPACITOR
	C25	QEPA1CM-106	NP E CAPACITOR
	C26	QCF11HP-223	CAPACITOR

#⚠	REF NO.	PART NO.	PART NAME, DESCRIPTION
	C27	QEPA1CM-106	NP E CAPACITOR
	C28	QEPA1CM-106	NP E CAPACITOR
	C29	QEPA1CM-106	NP E CAPACITOR
	C30	QEPA1CM-106	NP E CAPACITOR
	C31	QER61CM-476	E CAPACITOR
	C32	QCF11HP-223	CAPACITOR
	C33	QER61CM-476	E CAPACITOR
	C34	QCF11HP-223	CAPACITOR
	C35	QCS31HJ-150	CAPACITOR
	C36	QFN31HK-223	M CAPACITOR
	C37	QER61CM-476	E CAPACITOR
	C38	QCF11HP-223	CAPACITOR
	C39	QCS31HJ-390	CAPACITOR
	C40	QFN31HK-223	M CAPACITOR
	C41	QFN31HK-223	M CAPACITOR
	C42	QER61CM-476	E CAPACITOR
	C43	QCF11HP-223	CAPACITOR
	C44	QCS31HJ-180	CAPACITOR
	C45	QFN31HK-223	M CAPACITOR
	C46	QER61CM-476	E CAPACITOR
	C47	QCF11HP-223	CAPACITOR
	C48	QCS31HJ-390	CAPACITOR
	C49	QFN31HK-223	M CAPACITOR
	C50	QFN31HK-223	M CAPACITOR
	C51	QFN31HK-223	M CAPACITOR
	C52	QFN31HK-223	M CAPACITOR
	C53	QFN41HK-223	M CAPACITOR
	C54	QFN41HK-223	M CAPACITOR
	C55	QFN31HK-223	M CAPACITOR
	C56	QER61CM-476	E CAPACITOR
	C57	QCF11HP-223	CAPACITOR
	C58	QFN31HK-223	M CAPACITOR
	C59	QFN41HK-223	M CAPACITOR
	C60	QFN31HK-223	M CAPACITOR
	C61	QER61CM-476	E CAPACITOR
	C62	QCF11HP-223	CAPACITOR
	C63	QFN31HK-223	M CAPACITOR
	C64	QFN31HK-223	M CAPACITOR
	C65	QFN31HK-223	M CAPACITOR
	C66	QFN31HK-223	M CAPACITOR
	C67	QFN31HK-223	M CAPACITOR
	C68	QFN31HK-223	M CAPACITOR
	C69	QCF11HP-223	CAPACITOR
	C70	QCF11HP-223	CAPACITOR
	C71	QCF11HP-223	CAPACITOR
	C72	QER61CM-476	E CAPACITOR
	C73	QCF11HP-223	CAPACITOR
	C74	QFN31HK-223	M CAPACITOR
	C75	QFN31HK-223	M CAPACITOR
	C76	QFN31HK-223	M CAPACITOR
	C77	QFN31HK-223	M CAPACITOR
	C78	QER61CM-476	E CAPACITOR
	C79	QCF11HP-223	CAPACITOR
	C80	QCS31HJ-220	CAPACITOR
	C81	QFN31HK-223	M CAPACITOR
	C82	QER61CM-476	E CAPACITOR
	C83	QCF11HP-223	CAPACITOR
	C84	QCS31HJ-390	CAPACITOR
	C85	QFN31HK-223	M CAPACITOR
	C86	QFN31HK-223	M CAPACITOR
	C87	QER61CM-476	E CAPACITOR
	C88	QCF11HP-223	CAPACITOR
	C89	QCS31HJ-220	CAPACITOR
	C90	QFN31HK-223	M CAPACITOR
	C91	QER61CM-476	E CAPACITOR
	C92	QCF11HP-223	CAPACITOR
	C93	QCS31HJ-390	CAPACITOR

FM REC & PB

*⚠	REF NO.	PART NO.	PART NAME, DESCRIPTION
	C94	QFN31HK-223	M CAPACITOR
	C95	QFN31HK-223	M CAPACITOR
	C96	QFN31HK-223	M CAPACITOR
	C97	QFN31HK-223	M CAPACITOR
	C98	QER61CM-476	E CAPACITOR
	C99	QCF11HP-223	CAPACITOR
	C100	QFN31HK-223	M CAPACITOR
	C101	QCS31HJ-101	CAPACITOR
	C102	QFN31HK-103	M CAPACITOR
	C103	QCS31HJ-221	CAPACITOR
	C104	QFN31HK-103	M CAPACITOR
	C105	QER61HM-105G	E CAPACITOR
	C106	QFN31HK-333	M CAPACITOR
	C107	QCF11HP-223	CAPACITOR
	C108	QER61CM-476	E CAPACITOR
	C109	QCS31HJ-101	CAPACITOR
	C110	QCS31HJ-221	CAPACITOR
	C111	QFN31HK-103	M CAPACITOR
	C112	QFN31HK-103	M CAPACITOR
	C113	QER61HM-105G	E CAPACITOR
	C114	QFN31HK-333	M CAPACITOR
	C115	QCF11HP-223	CAPACITOR
	C116	QER61CM-476	E CAPACITOR
	C117	QCF11HP-223	CAPACITOR
	C118	QER61CM-476	E CAPACITOR
	C119	QFN31HK-223	M CAPACITOR
	C120	QFN31HK-223	M CAPACITOR
	C121	QFN31HK-223	M CAPACITOR
	C122	QCS11HJ-220	CAPACITOR
	L1	PU48530-221J	COIL
	L2	PU48530-221J	COIL
	L3	PU48530-221J	COIL
	L4	PU48530-221J	COIL
	L5	PU48530-221J	COIL
	L6	PU48530-221J	COIL
	L7	PU48530-221J	COIL
	L8	PU48530-221J	COIL
	L9	PU48530-270J	COIL
	L10	PU48530-221J	COIL
	L11	PU48530-390J	COIL
	L12	PU48530-221J	COIL
	L13	PU48530-220J	COIL
	L14	PU48530-221J	COIL
	L15	PU48530-390J	COIL
	L16	PU48530-221J	COIL
	L17	PU48530-221J	COIL
	L18	PU48530-221J	COIL
	L19	PU48530-221J	COIL
	L20	PU48530-180J	COIL
	L21	PU48530-221J	COIL
	L22	PU48530-390J	COIL
	L23	PU48530-221J	COIL
	L24	PU48530-180J	COIL
	L25	PU48530-221J	COIL
	L26	PU48530-390J	COIL
	L27	PU48530-221J	COIL
	L28	PU48530-221J	COIL
	L29	PU48530-271J	COIL
	L30	PU48530-271J	COIL
	CP1	QRD167J-0R0	RESISTOR
	HD1	PGZ00606-02	PWB HOLDER, X6
	SPC1	PGZ00605-02	PWB SPACER, X6
	TP1	PU54983	TEST PIN, X19(TP1-19)
	CN2	PGZ00421-64	MALE CONNECTOR